MICRO SWITCH
FREEPORT, ILLINOIS, U.S.A.
A DIVISION OF HONEYWELL
FED. MFG. CODE 91929

SWITCH - BASIC

CATALOG LISTING
BZ-RS

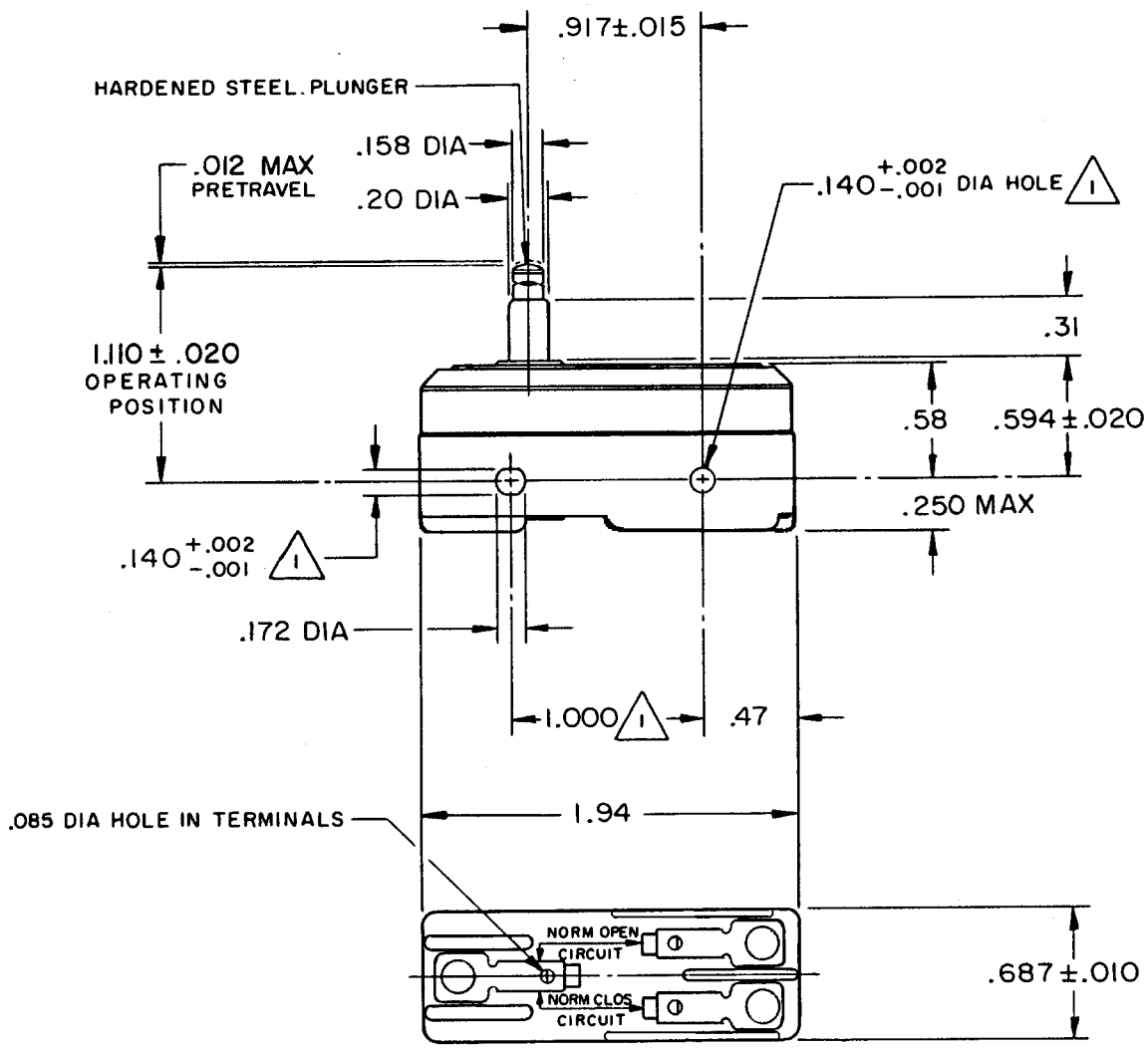

NOTE
1 MOUNTING HOLES WILL ACCEPT PINS OR SCREWS OF .139 MAX DIA ON 1.000 ± .002 CENTERS

THIS DRAWING COVERS A PROPRIETARY ITEM AND IS THE PROPERTY OF MICRO SWITCH, A DIVISION OF MINNEAPOLIS-HONEYWELL REGULATOR CO. THIS DRAWING IS NOT TO BE COPIED OR USED WITHOUT THE APPROVAL OF MICRO SWITCH.

CHARACTERISTICS

OPERATING FORCE - - - - 7 - 9 1/2 OZ

RELEASE FORCE - - - - - - - 4 OZ MIN

DIFFERENTIAL TRAVEL - - 0002 - .0004

OVERTRAVEL - - - - - - - - - .062 MIN

ELECTRICAL DATA

CONTACT ARRANGEMENT
S P D T

L103
15A 125, 250 OR 480 VAC
1/8HP 125 VAC, 1/4HP 250 VAC

SCALE FULL
DO NOT SCALE PRINT

UNLESS OTHERWISE NOTED
DIMENSIONS ARE IN INCHES
TOLERANCES ARE:

ONE PLACE	(.0)	±.030
TWO PLACE	(.00)	±.015
THREE PLACE	(.000)	±.005
ANGLES		±

WEIGHT .053 LB

DRAWING NUMBER BZ - RS
PAGE 1 OF 1
ISSUE M 17

REPLACES
RELEASE NO.
CHECK
CHECK
CHECK
CHECK

REVISIONS

A	CO 15200	RES 4 JUNE 64
B	C023645	ORD 22 JAN 68
C	C044156	SJS 20 APR 78
D	C046304	JAP 12 OCT 79
E	OBS C054735	KEW 21 MAR 84
F	REINST C054735	JAP 27 APR 84
G	CO 58037	SMA 1 OCT 85
H	CO-78874	DLT 18 NOV 94
J	CO-94212-J	JJA 5 OCT 99

5 JUNE 64
LSD
4 JUNE 64
RES

DRAWN
FORMTEK
FO-50378

Downloaded from Arrow.com.