Connector Location A

Connector Location B

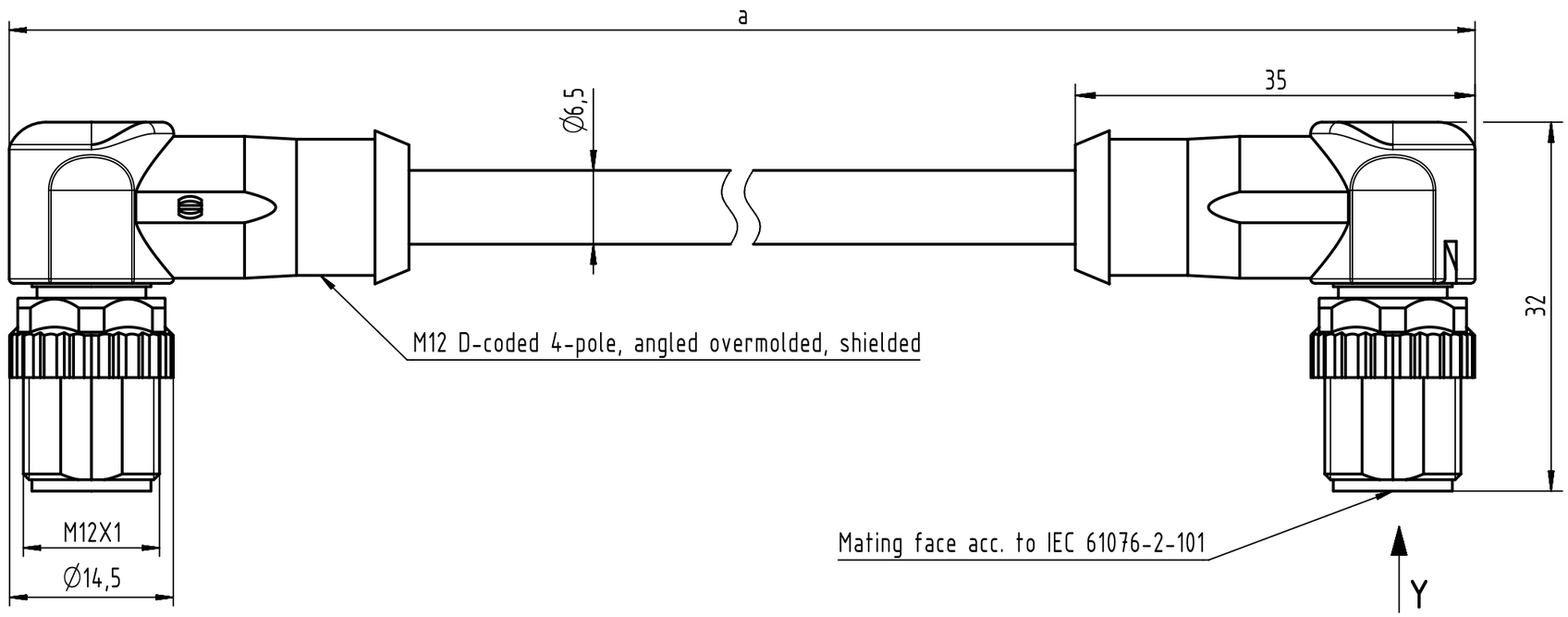

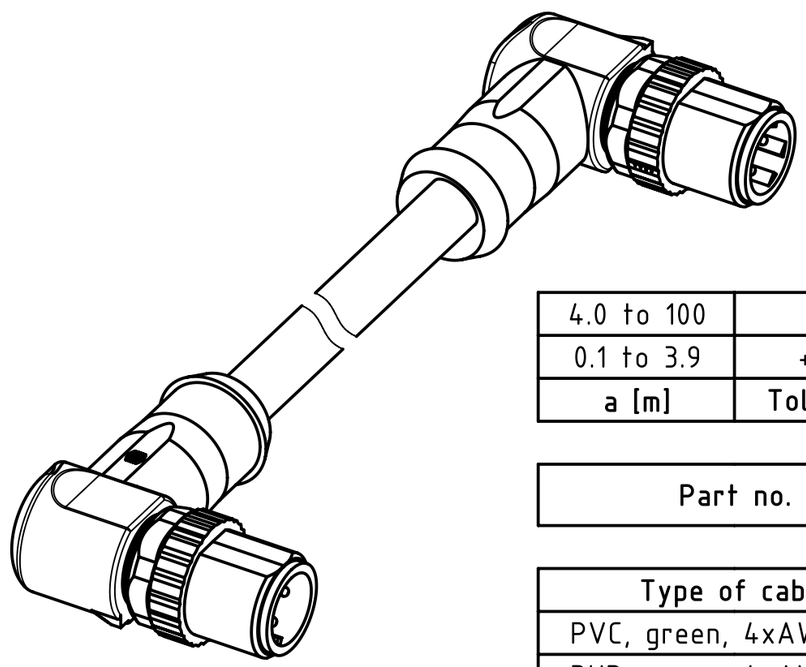

X
male

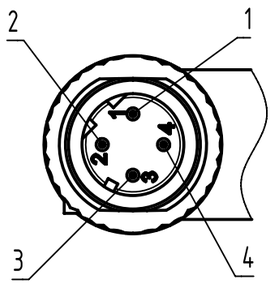

Loading Plan

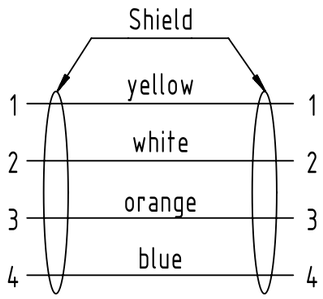

Y
male

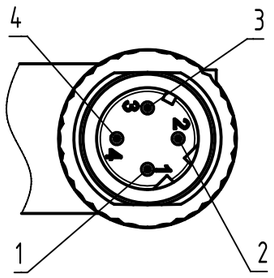

4.0 to 100	±1%
0.1 to 3.9	+0.04
a [m]	Tolerance

length in "1m" step	100	XXX=000
	99	XXX=990
	⋮	⋮
	12	XXX=120
	11	XXX=110
length in "0.1m" step	10	XXX=100
	9.9	XXX=099
	9.8	XXX=098
	⋮	⋮
	0.4	XXX=004
	0.3	XXX=003
	0.2	XXX=002
	0.1	XXX=001
Step	a [m]	XXX

Part no.	213494944XXXXX

Type of cable	XX
PVC, green, 4xAWG22/7	XX=05
PUR, green, 4xAWG22/7	XX=77

- Protection level: IP65/67
- Temperature range: -30°C ... +70°C

All Dimensions in mm	Tech. Character.	Free size tol.		According to production drawing
All rights reserved	Created by BANCIUD Banciu	Inspected by COSTEA Costea	Standardisation MUNTEANV Muntean	Date 2019-03-01	State Final Release
Department HCS - RO	Title M12 Cable Assembly D-cod an/an m/m			Doc-Key / ECM-Nr. 100588529/UGD/000/F 500000148052
HARTING Customised Solutions D-32339 Espelkamp	Type TB	Number 213494944XXXXX	Rev. F	Page 1/1

A3

Downloaded from Arrow.com.