1. Overview

1.1 Features

The M16C/65 Group microcomputer (MCU) incorporates the M16C/60 Series CPU core and flash memory, employing sophisticated instructions for a high level of efficiency. This MCU has 1 MB of address space (expandable to 4 MB), and it is capable of executing instructions at high speed. In addition, the CPU core boasts a multiplier for high-speed operation processing.

This MCU consumes low power, and supports operating modes that allow additional power control. The MCU also uses an anti-noise configuration to reduce emissions of electromagnetic noise and is designed to withstand electromagnetic interference (EMI). By integrating many of the peripheral functions, including the multifunction timer and serial interface, the number of system components has been reduced.

1.1.1 Applications

This MCU can be used in audio components, cameras, televisions, household appliances, office equipment, communication devices, mobile devices, industrial equipment, and other applications.

Downloaded from Arrow.com.

1.2 Specifications

The M16C/65 Group includes 128-pin and 100-pin packages. Table 1.1 to Table 1.4 list specifications.

Table 1.1 Specifications for the 128-Pin Package (1/2)

Item	Function	Description
CPU	Central processing unit	M16C/60 Series core (multiplier: 16 bit × 16 bit → 32 bit, multiply and accumulate instruction: 16 bit × 16 bit + 32 bit → 32 bit) • Number of basic instructions: 91 • Minimum instruction execution time: 31.25 ns (f(BCLK) = 32 MHz, VCC1 = VCC2 = 2.7 to 5.5 V) • Operating modes: Single-chip, memory expansion, and microprocessor
Memory	ROM, RAM, data flash	See Table 1.5 “Product List (1/2)” and Table 1.6 “Product List (2/2)”.
Voltage Detection	Voltage detector	• Power-on reset • 3 voltage detection points (detection level of voltage detection 0 and 1 selectable)
Clock	Clock generator	• 5 circuits: Main clock, sub clock, low-speed on-chip oscillator (125 kHz), high-speed on-chip oscillator (40 MHz ±10%), PLL frequency synthesizer • Oscillation stop detection: Main clock oscillation stop/restart detection function • Frequency divider circuit: Divide ratio selectable from 1, 2, 4, 8, and 16 • Power saving features: Wait mode, stop mode • Real-time clock
External Bus Expansion	Bus memory expansion	• Address space: 1 MB • External bus interface: 0 to 8 waits inserted, 4 chip select outputs, memory area expansion function (expandable to 4 MB), 3 V and 5 V interfaces • Bus format: Separate bus or multiplexed bus selectable, data bus width selectable (8 or 16 bits), number of address buses selectable (12, 16, or 20)
I/O Ports	Programmable I/O ports	• CMOS I/O ports: 111 (selectable pull-up resistors) • N-channel open drain ports: 3
Interrupts		• Interrupt vectors: 70 • External interrupt inputs: 13 ($\overline{\text{NMI}}$, $\overline{\text{INT}}$ × 8, key input × 4) • Interrupt priority levels: 7
Watchdog Timer		15-bit timer × 1 (with prescaler) Automatic reset start function selectable
DMA	DMAC	• 4 channels, cycle steal mode • Trigger sources: 43 • Transfer modes: 2 (single transfer, repeat transfer)

Downloaded from Arrow.com.

Table 1.2 Specifications for the 128-Pin Package (2/2)

Item	Function	Description
Timers	Timer A	16-bit timer × 5 Timer mode, event counter mode, one-shot timer mode, pulse width modulation (PWM) mode Event counter two-phase pulse signal processing (two-phase encoder input) × 3 Programmable output mode × 3
	Timer B	16-bit timer × 6 Timer mode, event counter mode, pulse period measurement mode, pulse width measurement mode
	Three-phase motor control timer functions	• Three-phase inverter control (timer A1, timer A2, timer A4, timer B2) • On-chip dead time timer
	Real-time clock	Count: seconds, minutes, hours, days of the week
	PWM function	8 bits × 2
	Remote control signal receiver	• 2 circuits • 4 wave pattern matchings (differentiate wave pattern for headers, data 0, data 1, and special data) • 6-byte receive buffer (1 circuit only) • Operating frequency of 32 kHz
Serial Interface	UART0 to UART2, UART5 to UART7	Clock synchronous/asynchronous × 6 channels I^2C-bus, IEBus, special mode 2 SIM (UART2)
	SI/O3, SI/O4	Clock synchronization only × 2 channels
Multi-master I^2C-bus Interface		1 channel
CEC Functions (2)		CEC transmit/receive, arbitration lost detection, ACK automatic output, operation frequency of 32 kHz
A/D Converter		10-bit resolution × 26 channels, including sample and hold function Conversion time: 1.72 µs
D/A Converter		8-bit resolution × 2 circuits
CRC Calculator		CRC-CCITT ($X^{16} + X^{12} + X^5 + 1$), CRC-16 ($X^{16} + X^{15} + X^2 + 1$) compliant
Flash Memory		• Program and erase power supply voltage: 2.7 to 5.5 V • Program and erase cycles: 1,000 times (program ROM 1, program ROM 2), 10,000 times (data flash) • Program security: ROM code protect, ID code check
Debug Functions		On-chip debug, on-board flash rewrite, address match interrupt × 4
Operation Frequency/Supply Voltage		32 MHz/VCC1 = 2.7 to 5.5 V, VCC2 = 2.7 V to VCC1
Current Consumption		Described in Electrical Characteristics
Operating Temperature		-20°C to 85°C, -40°C to 85°C (1)
Package		128-pin LQFP: PLQP0128KB-A (Previous package code: 128P6Q-A)

Notes:
1. See Table 1.5 “Product List (1/2)” and Table 1.6 “Product List (2/2)” for the operating temperature.
2. The CEC function indicates circuitry which supports the transmission and reception of CEC signals standardized by the High-Definition Multimedia Interface (HDMI). HDMI and High-Definition Multimedia Interface are registered trademarks of HDMI Licensing, LLC.

Downloaded from Arrow.com.

Table 1.3 Specifications for the 100-Pin Package (1/2)

Item	Function	Description
CPU	Central processing unit	M16C/60 Series core (multiplier: 16 bit × 16 bit → 32 bit, multiply and accumulate instruction: 16 bit × 16 bit + 32 bit → 32 bit) • Number of basic instructions: 91 • Minimum instruction execution time: 31.25 ns (f(BCLK) = 32 MHz, VCC1 = VCC2 = 2.7 to 5.5 V) • Operating modes: Single-chip, memory expansion, and microprocessor
Memory	ROM, RAM, data flash	See Table 1.5 “Product List (1/2)” and Table 1.6 “Product List (2/2)”.
Voltage Detection	Voltage detector	• Power-on reset • 3 voltage detection points (detection level of voltage detection 0 and 1 selectable)
Clock	Clock generator	• 5 circuits: Main clock, sub clock, low-speed on-chip oscillator (125 kHz), high-speed on-chip oscillator (40 MHz ±10%), PLL frequency synthesizer • Oscillation stop detection: Main clock oscillation stop/restart detection function • Frequency divider circuit: Divide ratio selectable from 1, 2, 4, 8, and 16 • Power saving features: Wait mode, stop mode • Real-time clock
External Bus Expansion	Bus memory expansion	• Address space: 1 MB • External bus interface: 0 to 8 waits inserted, 4 chip select outputs, memory area expansion function (expandable to 4 MB), 3 V and 5 V interfaces • Bus format: Separate bus or multiplexed bus selectable, data bus width selectable (8 or 16 bits), number of address buses selectable (12, 16, or 20)
I/O Ports	Programmable I/O ports	• CMOS I/O ports: 85 (selectable pull-up resistors) • N-channel open drain ports: 3
Interrupts		• Interrupt vectors: 70 • External interrupt inputs: 13 ($\overline{\text{NMI}}$, $\overline{\text{INT}}$ × 8, key input × 4) • Interrupt priority levels: 7
Watchdog Timer		15-bit timer × 1 (with prescaler) Automatic reset start function selectable
DMA	DMAC	• 4 channels, cycle steal mode • Trigger sources: 43 • Transfer modes: 2 (single transfer, repeat transfer)

Downloaded from Arrow.com.

Table 1.4 Specifications for the 100-Pin Package (2/2)

Item	Function	Description
Timers	Timer A	16-bit timer × 5 Timer mode, event counter mode, one-shot timer mode, pulse width modulation (PWM) mode Event counter two-phase pulse signal processing (two-phase encoder input) × 3 Programmable output mode × 3
	Timer B	16-bit timer × 6 Timer mode, event counter mode, pulse period measurement mode, pulse width measurement mode
	Three-phase motor control timer functions	• Three-phase inverter control (timer A1, timer A2, timer A4, timer B2) • On-chip dead time timer
	Real-time clock	Count: seconds, minutes, hours, days of the week
	PWM function	8 bits × 2
	Remote control signal receiver	• 2 circuits • 4 wave pattern matchings (differentiate wave pattern for headers, data 0, data 1, and special data) • 6-byte receive buffer (1 circuit only) • Operating frequency of 32 kHz
Serial Interface	UART0 to UART2, UART5 to UART7	Clock synchronous/asynchronous × 6 channels I^2C-bus, IEBus, special mode 2 SIM (UART2)
	SI/O3, SI/O4	Clock synchronization only × 2 channels
Multi-master I^2C-bus Interface		1 channel
CEC Functions (2)		CEC transmit/receive, arbitration lost detection, ACK automatic output, operation frequency of 32 kHz
A/D Converter		10-bit resolution × 26 channels, including sample and hold function Conversion time: 1.72 µs
D/A Converter		8-bit resolution × 2 circuits
CRC Calculator		CRC-CCITT ($X^{16} + X^{12} + X^5 + 1$), CRC-16 ($X^{16} + X^{15} + X^2 + 1$) compliant
Flash Memory		• Program and erase power supply voltage: 2.7 to 5.5 V • Program and erase cycles: 1,000 times (program ROM 1, program ROM 2), 10,000 times (data flash) • Program security: ROM code protect, ID code check
Debug Functions		On-chip debug, on-board flash rewrite, address match interrupt × 4
Operation Frequency/Supply Voltage		25 MHz/VCC1 = 2.7 to 5.5 V, VCC2 = 2.7 V to VCC1 32 MHz/VCC1 = 2.7 to 5.5 V, VCC2 = 2.7 V to VCC1
Current Consumption		Described in Electrical Characteristics
Operating Temperature		-20°C to 85°C, -40°C to 85°C (1)
Package		100-pin QFP: PRQP0100JD-B (Previous package code: 100P6F-A) 100-pin LQFP: PLQP0100KB-A (Previous package code: 100P6Q-A)

Notes:
1. See Table 1.5 “Product List (1/2)” and Table 1.6 “Product List (2/2)” for the operating temperature.
2. The CEC function indicates circuitry which supports the transmission and reception of CEC signals standardized by the High-Definition Multimedia Interface (HDMI). HDMI and High-Definition Multimedia Interface are registered trademarks of HDMI Licensing, LLC.

Downloaded from Arrow.com.

1.3 Product List

Table 1.5 and Table 1.6 list product information. Figure 1.1 shows the Part No., with Memory Size and Package, and Figure 1.2 shows the Marking Diagram (Top View).

Table 1.5 Product List (1/2) As of July 2012

Part No.	ROM Capacity			RAM Capacity	Package Code	Remarks
	Program ROM 1	Program ROM 2	Data flash			
R5F36506NFA	128 KB	16 KB	4 KB × 2 blocks	12 KB	PRQP0100JD-B	Operating temperature -20°C to 85°C
R5F36506NFB					PLQP0100KB-A	
R5F36506DFA					PRQP0100JD-B	Operating temperature -40°C to 85°C
R5F36506DFB					PLQP0100KB-A	
R5F3651ENFC	256 KB	16 KB	4 KB × 2 blocks	20 KB	PLQP0128KB-A	Operating temperature -20°C to 85°C
R5F3650ENFA					PRQP0100JD-B	
R5F3650ENFB					PLQP0100KB-A	
R5F3651EDFC					PLQP0128KB-A	Operating temperature -40°C to 85°C
R5F3650EDFA					PRQP0100JD-B	
R5F3650EDFB					PLQP0100KB-A	
R5F3651KNFC	384 KB	16 KB	4 KB × 2 blocks	31 KB	PLQP0128KB-A	Operating temperature -20°C to 85°C
R5F3650KNFA					PRQP0100JD-B	
R5F3650KNFB					PLQP0100KB-A	
R5F3651KDFC					PLQP0128KB-A	Operating temperature -40°C to 85°C
R5F3650KDFA					PRQP0100JD-B	
R5F3650KDFB					PLQP0100KB-A	
R5F3651MNFC	512 KB	16 KB	4 KB × 2 blocks	31 KB	PLQP0128KB-A	Operating temperature -20°C to 85°C
R5F3650MNFA					PRQP0100JD-B	
R5F3650MNFB					PLQP0100KB-A	
R5F3651MDFC					PLQP0128KB-A	Operating temperature -40°C to 85°C
R5F3650MDFA					PRQP0100JD-B	
R5F3650MDFB					PLQP0100KB-A	
R5F3651NNFC	512 KB	16 KB	4 KB × 2 blocks	47 KB	PLQP0128KB-A	Operating temperature -20°C to 85°C
R5F3650NNFA					PRQP0100JD-B	
R5F3650NNFB					PLQP0100KB-A	
R5F3651NDFC					PLQP0128KB-A	Operating temperature -40°C to 85°C
R5F3650NDFA					PRQP0100JD-B	
R5F3650NDFB					PLQP0100KB-A	
R5F3651RNFC	640 KB	16 KB	4 KB × 2 blocks	47 KB	PLQP0128KB-A	Operating temperature -20°C to 85°C
R5F3650RNFA					PRQP0100JD-B	
R5F3650RNFB					PLQP0100KB-A	
R5F3651RDFC					PLQP0128KB-A	Operating temperature -40°C to 85°C
R5F3650RDFA					PRQP0100JD-B	
R5F3650RDFB					PLQP0100KB-A	

(D): Under development
(P): Planning

Previous package codes are as follows:
PLQP0128KB-A: 128P6Q-A
PRQP0100JD-B: 100P6F-A
PLQP0100KB-A: 100P6Q-A

Downloaded from Arrow.com.

Table 1.6 Product List (2/2) As of July 2012

Part No.	ROM Capacity			RAM Capacity	Package Code	Remarks
	Program ROM 1	Program ROM 2	Data flash			
R5F3651TNFC	768 KB	16 KB	4 KB × 2 blocks	47 KB	PLQP0128KB-A	Operating temperature -20°C to 85°C
R5F3650TNFA					PRQP0100JD-B	
R5F3650TNFB					PLQP0100KB-A	
R5F3651TDFC					PLQP0128KB-A	Operating temperature -40°C to 85°C
R5F3650TDFA					PRQP0100JD-B	
R5F3650TDFB					PLQP0100KB-A	

(D): Under development
(P): Planning

Previous package codes are as follows:
PLQP0128KB-A: 128P6Q-A
PRQP0100JD-B: 100P6F-A
PLQP0100KB-A: 100P6Q-A

Downloaded from Arrow.com.

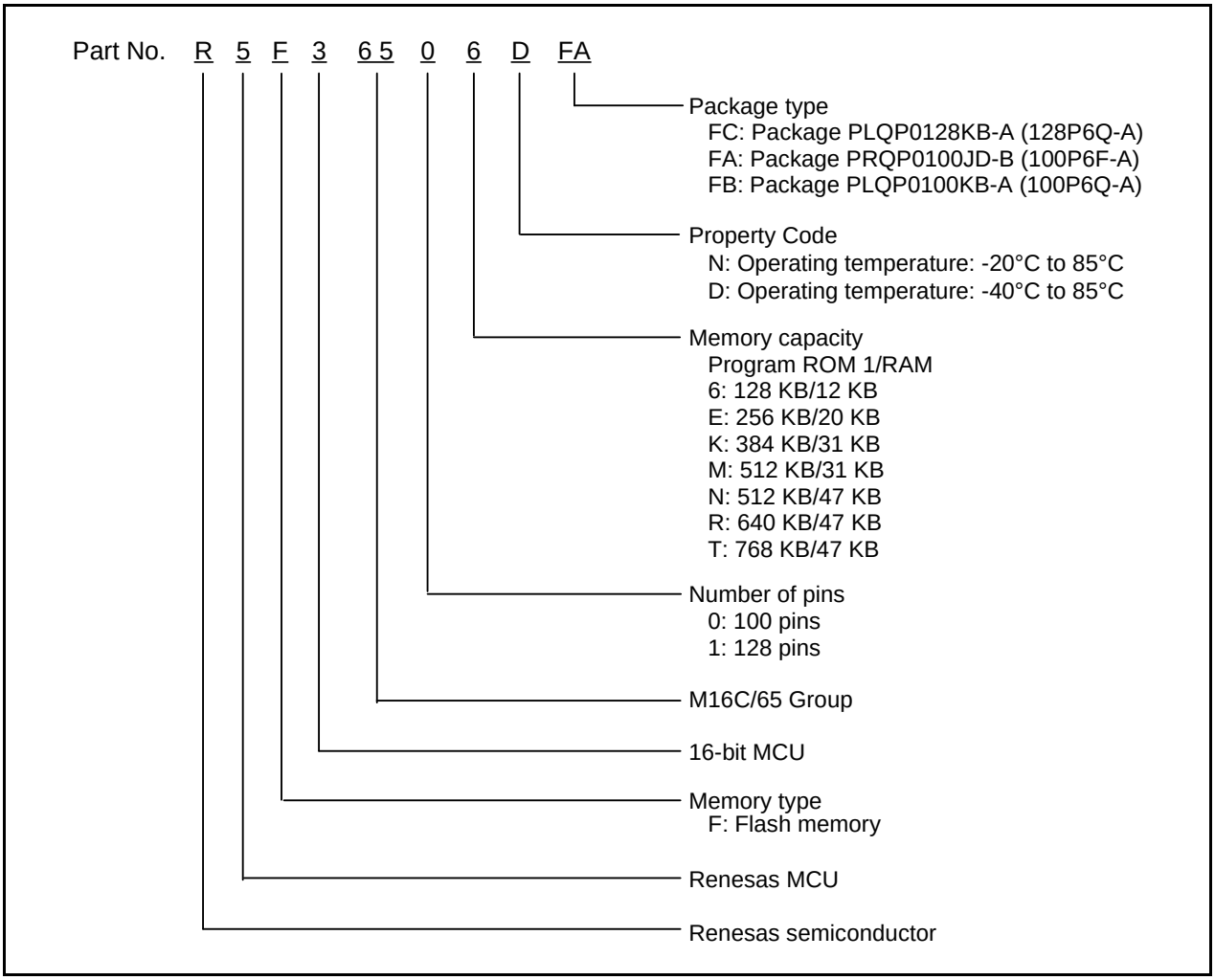

Figure 1.1 Part No., with Memory Size and Package

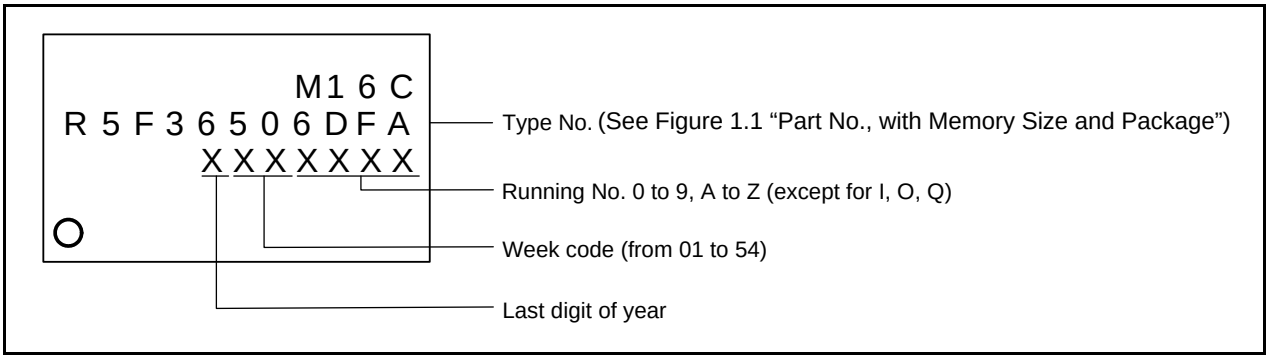

Figure 1.2 Marking Diagram (Top View)

Downloaded from Arrow.com.

1.4 Block Diagram

Figure 1.3 to Figure 1.4 show block diagrams.

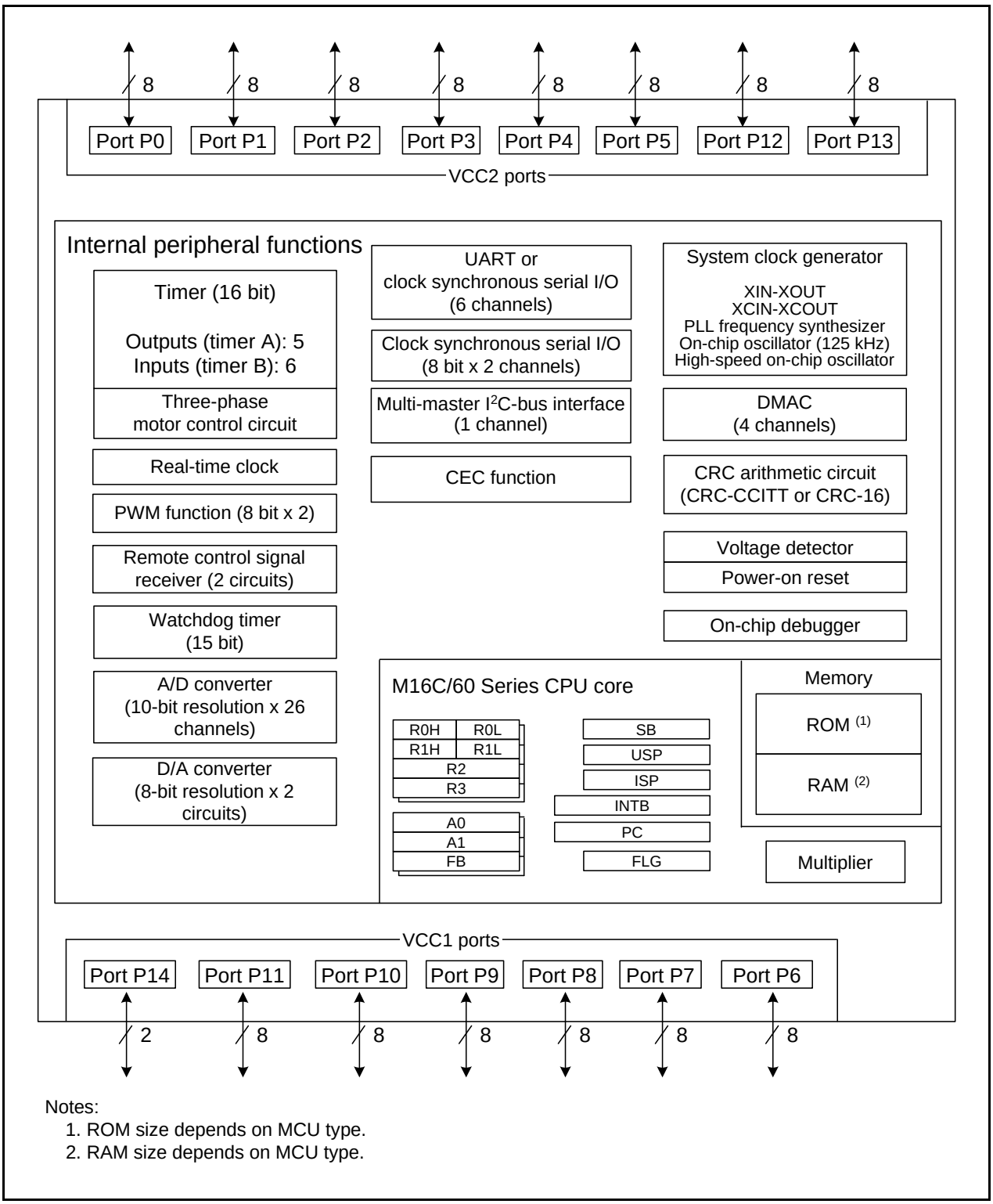

Notes:
1. ROM size depends on MCU type.
2. RAM size depends on MCU type.

Figure 1.3 Block Diagram for the 128-Pin Package

Downloaded from Arrow.com.

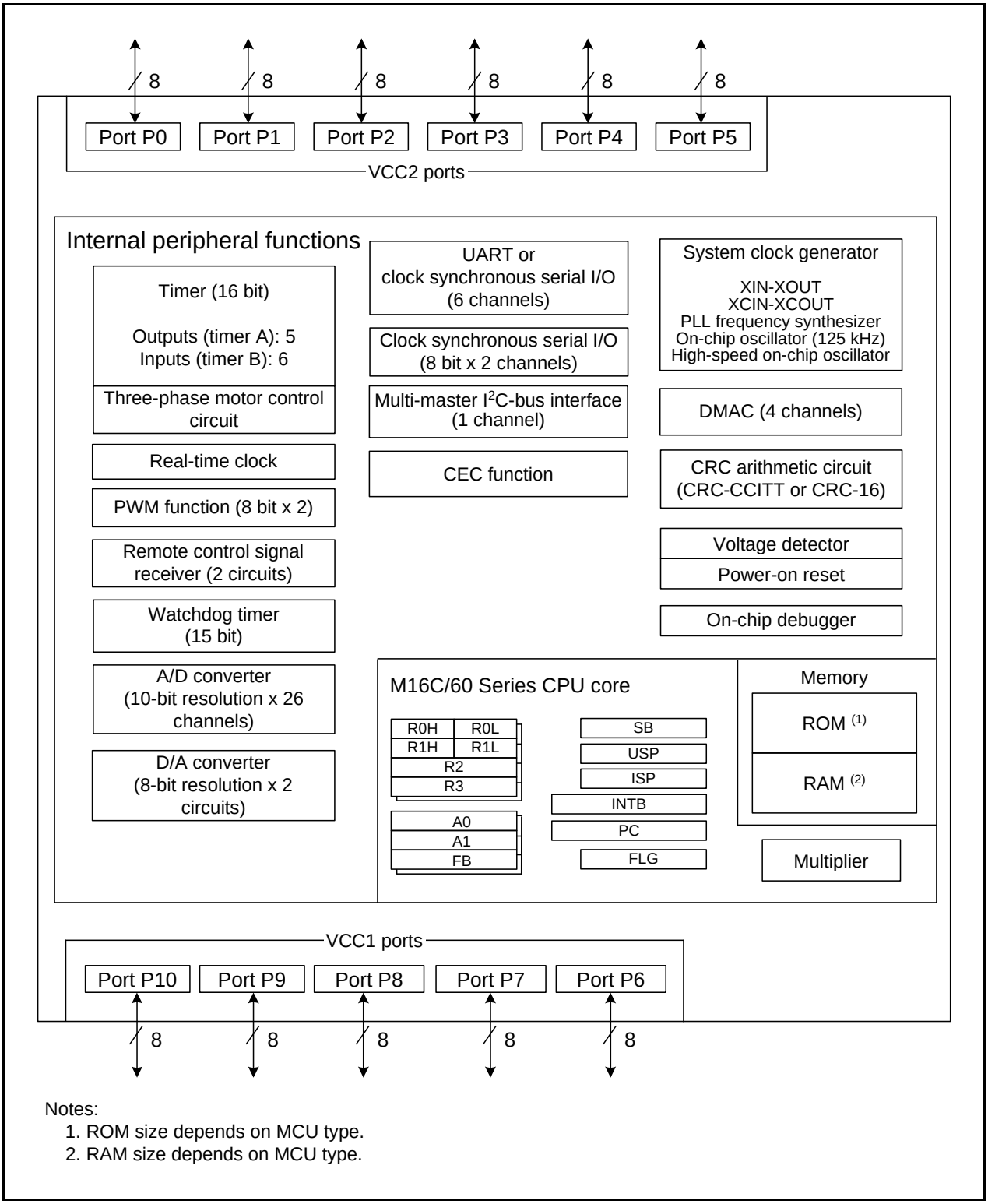

Notes:
1. ROM size depends on MCU type.
2. RAM size depends on MCU type.

Figure 1.4 Block Diagram for the 100-Pin Package

Downloaded from Arrow.com.

1.5 Pin Assignments

Figure 1.5 to Figure 1.7 show pin assignments. Table 1.7 to Table 1.11 list pin names.

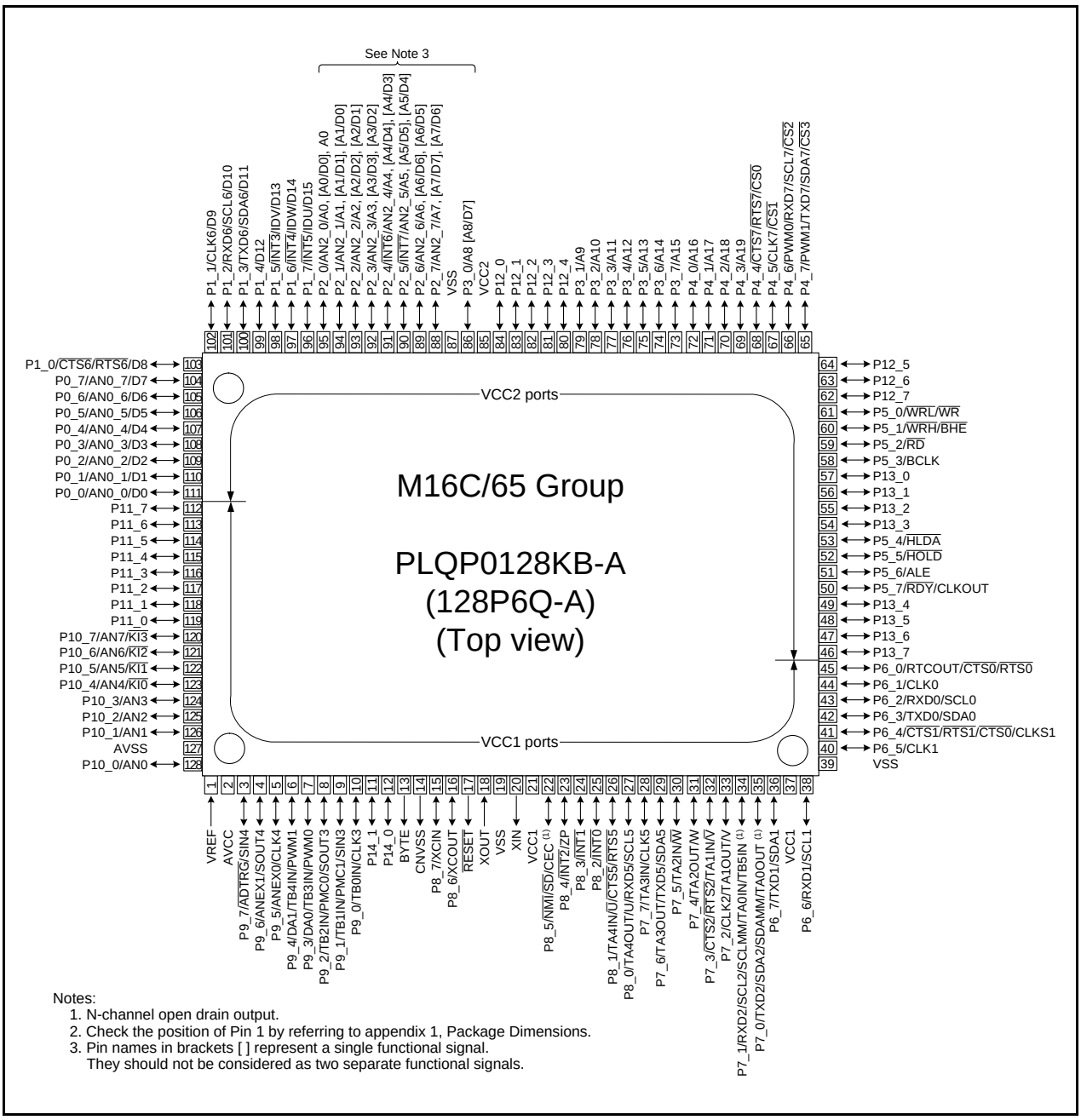

Figure 1.5 Pin Assignment for the 128-Pin Package

Downloaded from Arrow.com.

Table 1.7 Pin Names for the 128-Pin Package (1/3)

Pin No.	Control Pin	Port	I/O Pin for Peripheral Function				Bus Control Pin
			Interrupt	Timer	Serial interface	A/D converter, D/A converter	
1	VREF						
2	AVCC						
3		P9_7			SIN4	$\overline{\text{ADTRG}}$	
4		P9_6			SOUT4	ANEX1	
5		P9_5			CLK4	ANEX0	
6		P9_4		TB4IN/PWM1		DA1	
7		P9_3		TB3IN/PWM0		DA0	
8		P9_2		TB2IN/PMC0	SOUT3		
9		P9_1		TB1IN/PMC1	SIN3		
10		P9_0		TB0IN	CLK3		
11		P14_1					
12		P14_0					
13	BYTE						
14	CNVSS						
15	XCIN	P8_7					
16	XCOUT	P8_6					
17	$\overline{\text{RESET}}$						
18	XOUT						
19	VSS						
20	XIN						
21	VCC1						
22		P8_5	$\overline{\text{NMI}}$	$\overline{\text{SD}}$	CEC		
23		P8_4	$\overline{\text{INT2}}$	ZP			
24		P8_3	$\overline{\text{INT1}}$				
25		P8_2	$\overline{\text{INT0}}$				
26		P8_1		TA4IN/$\overline{\text{U}}$	$\overline{\text{CTS5}}$/$\overline{\text{RTS5}}$		
27		P8_0		TA4OUT/U	RXD5/SCL5		
28		P7_7		TA3IN	CLK5		
29		P7_6		TA3OUT	TXD5/SDA5		
30		P7_5		TA2IN/$\overline{\text{W}}$			
31		P7_4		TA2OUT/W			
32		P7_3		TA1IN/$\overline{\text{V}}$	$\overline{\text{CTS2}}$/$\overline{\text{RTS2}}$		
33		P7_2		TA1OUT/V	CLK2		
34		P7_1		TA0IN/TB5IN	RXD2/SCL2/SCLMM		
35		P7_0		TA0OUT	TXD2/SDA2/SDAMM		
36		P6_7			TXD1/SDA1		
37	VCC1						
38		P6_6			RXD1/SCL1		
39	VSS						
40		P6_5			CLK1		
41		P6_4			$\overline{\text{CTS1}}$/$\overline{\text{RTS1}}$/$\overline{\text{CTS0}}$/CLKS1		
42		P6_3			TXD0/SDA0		
43		P6_2			RXD0/SCL0		
44		P6_1			CLK0		
45		P6_0		RTCOUT	$\overline{\text{CTS0}}$/$\overline{\text{RTS0}}$		
46		P13_7					
47		P13_6					
48		P13_5					
49		P13_4					
50	CLKOUT	P5_7					$\overline{\text{RDY}}$

Downloaded from Arrow.com.

Table 1.8 Pin Names for the 128-Pin Package (2/3)

Pin No.	Control Pin	Port	I/O Pin for Peripheral Function				Bus Control Pin
			Interrupt	Timer	Serial interface	A/D converter, D/A converter	
51		P5_6					ALE
52		P5_5					$\overline{\text{HOLD}}$
53		P5_4					$\overline{\text{HLDA}}$
54		P13_3					
55		P13_2					
56		P13_1					
57		P13_0					
58		P5_3					BCLK
59		P5_2					$\overline{\text{RD}}$
60		P5_1					$\overline{\text{WRH}}$/$\overline{\text{BHE}}$
61		P5_0					$\overline{\text{WRL}}$/$\overline{\text{WR}}$
62		P12_7					
63		P12_6					
64		P12_5					
65		P4_7		PWM1	TXD7/SDA7		$\overline{\text{CS3}}$
66		P4_6		PWM0	RXD7/SCL7		$\overline{\text{CS2}}$
67		P4_5			CLK7		$\overline{\text{CS1}}$
68		P4_4			$\overline{\text{CTS7}}$/$\overline{\text{RTS7}}$		$\overline{\text{CS0}}$
69		P4_3					A19
70		P4_2					A18
71		P4_1					A17
72		P4_0					A16
73		P3_7					A15
74		P3_6					A14
75		P3_5					A13
76		P3_4					A12
77		P3_3					A11
78		P3_2					A10
79		P3_1					A9
80		P12_4					
81		P12_3					
82		P12_2					
83		P12_1					
84		P12_0					
85	VCC2						
86		P3_0					A8, [A8/D7]
87	VSS						
88		P2_7				AN2_7	A7, [A7/D7], [A7/D6]
89		P2_6				AN2_6	A6, [A6/D6], [A6/D5]
90		P2_5	$\overline{\text{INT7}}$			AN2_5	A5, [A5/D5], [A5/D4]
91		P2_4	$\overline{\text{INT6}}$			AN2_4	A4[A4/D4], [A4/D3]
92		P2_3				AN2_3	A3, [A3/D3], [A3/D2]
93		P2_2				AN2_2	A2, [A2/D2], [A2/D1]
94		P2_1				AN2_1	A1, [A1/D1], [A1/D0]
95		P2_0				AN2_0	A0, [A0/D0], A0
96		P1_7	$\overline{\text{INT5}}$	IDU			D15
97		P1_6	$\overline{\text{INT4}}$	IDW			D14
98		P1_5	$\overline{\text{INT3}}$	IDV			D13
99		P1_4					D12
100		P1_3			TXD6/SDA6		D11

Downloaded from Arrow.com.

Table 1.9 Pin Names for the 128-Pin Package (3/3)

Pin No.	Control Pin	Port	I/O Pin for Peripheral Function				Bus Control Pin
			Interrupt	Timer	Serial interface	A/D converter, D/A converter	
101		P1_2			RXD6/SCL6		D10
102		P1_1			CLK6		D9
103		P1_0			$\overline{\text{CTS6}}$/RTS6		D8
104		P0_7				AN0_7	D7
105		P0_6				AN0_6	D6
106		P0_5				AN0_5	D5
107		P0_4				AN0_4	D4
108		P0_3				AN0_3	D3
109		P0_2				AN0_2	D2
110		P0_1				AN0_1	D1
111		P0_0				AN0_0	D0
112		P11_7					
113		P11_6					
114		P11_5					
115		P11_4					
116		P11_3					
117		P11_2					
118		P11_1					
119		P11_0					
120		P10_7	$\overline{\text{KI3}}$			AN7	
121		P10_6	$\overline{\text{KI2}}$			AN6	
122		P10_5	$\overline{\text{KI1}}$			AN5	
123		P10_4	$\overline{\text{KI0}}$			AN4	
124		P10_3				AN3	
125		P10_2				AN2	
126		P10_1				AN1	
127	AVSS						
128		P10_0				AN0	

Downloaded from Arrow.com.

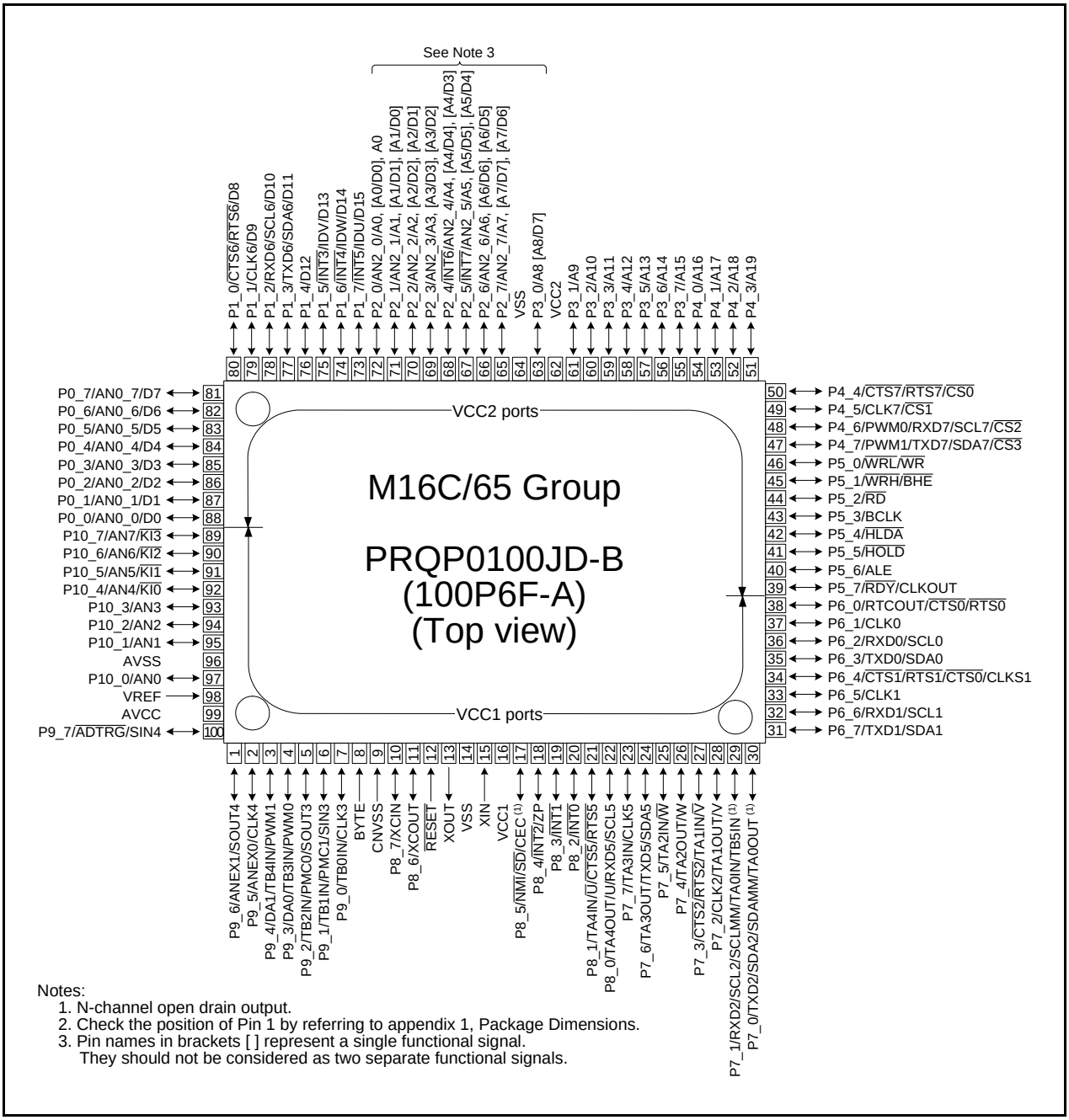

Notes:
1. N-channel open drain output.
2. Check the position of Pin 1 by referring to appendix 1, Package Dimensions.
3. Pin names in brackets [ ] represent a single functional signal.
They should not be considered as two separate functional signals.

Figure 1.6 Pin Assignment for the 100-Pin Package

Downloaded from Arrow.com.

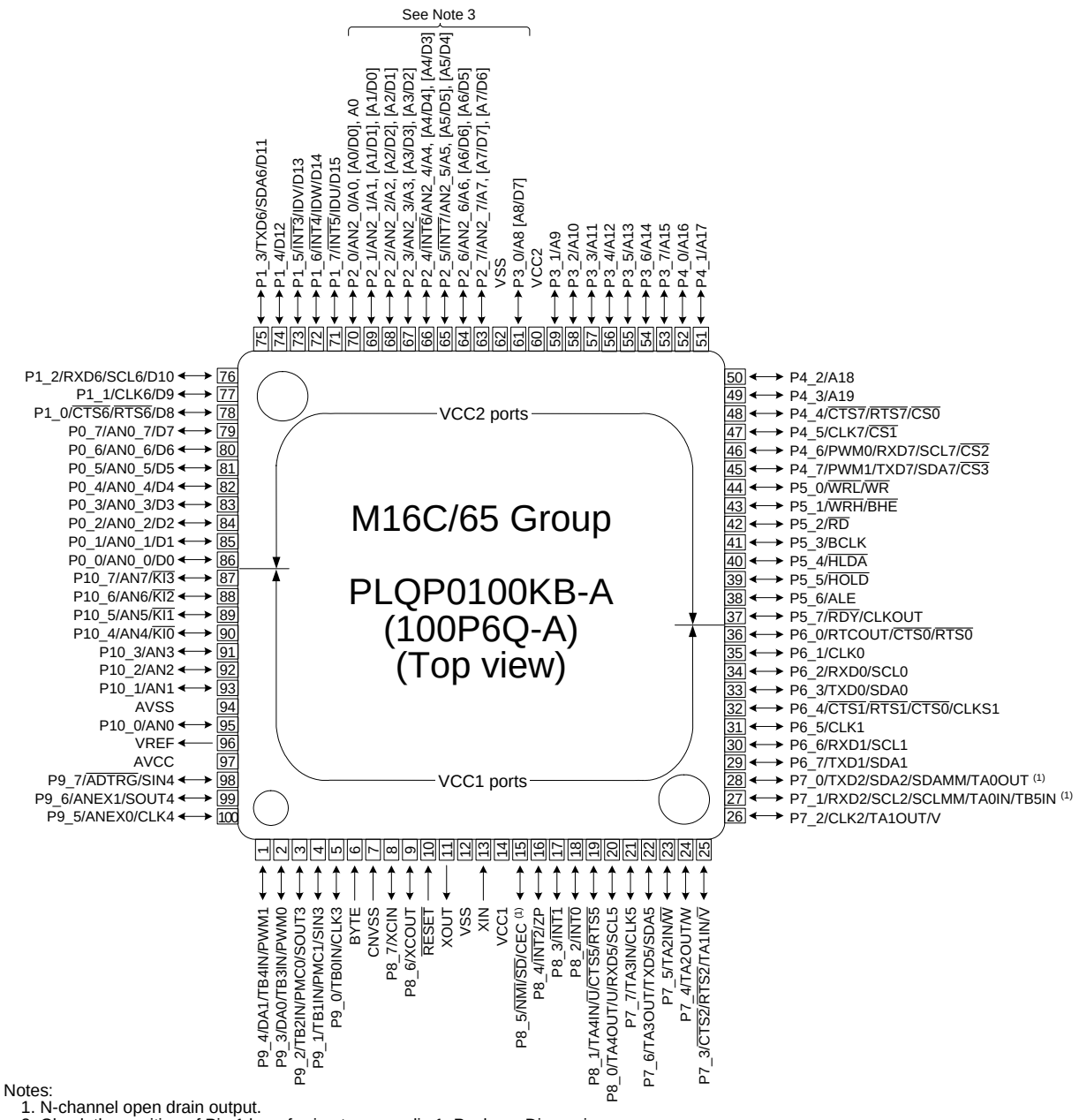

Notes:
1. N-channel open drain output.
2. Check the position of Pin 1 by referring to appendix 1, Package Dimensions.
3. Pin names in brackets [ ] represent a single functional signal.
They should not be considered as two separate functional signals.

Figure 1.7 Pin Assignment for the 100-Pin Package

Downloaded from Arrow.com.

Table 1.10 Pin Names for the 100-Pin Package (1/2)

Pin No.		Control Pin	Port	I/O Pin for Peripheral Function				Bus Control Pin
FA	FB			Interrupt	Timer	Serial interface	A/D converter, D/A converter	
1	99		P9_6			SOUT4	ANEX1	
2	100		P9_5			CLK4	ANEX0	
3	1		P9_4		TB4IN/PWM1		DA1	
4	2		P9_3		TB3IN/PWM0		DA0	
5	3		P9_2		TB2IN/PMC0	SOUT3		
6	4		P9_1		TB1IN/PMC1	SIN3		
7	5		P9_0		TB0IN	CLK3		
8	6	BYTE						
9	7	CNVSS						
10	8	XCIN	P8_7					
11	9	XCOUT	P8_6					
12	10	$\overline{\text{RESET}}$						
13	11	XOUT						
14	12	VSS						
15	13	XIN						
16	14	VCC1						
17	15		P8_5	$\overline{\text{NMI}}$	$\overline{\text{SD}}$	CEC		
18	16		P8_4	$\overline{\text{INT2}}$	ZP			
19	17		P8_3	$\overline{\text{INT1}}$				
20	18		P8_2	$\overline{\text{INT0}}$				
21	19		P8_1		TA4IN/$\overline{\text{U}}$	$\overline{\text{CTS5/RTS5}}$		
22	20		P8_0		TA4OUT/U	RXD5/SCL5		
23	21		P7_7		TA3IN	CLK5		
24	22		P7_6		TA3OUT	TXD5/SDA5		
25	23		P7_5		TA2IN/$\overline{\text{W}}$			
26	24		P7_4		TA2OUT/W			
27	25		P7_3		TA1IN/$\overline{\text{V}}$	$\overline{\text{CTS2/RTS2}}$		
28	26		P7_2		TA1OUT/V	CLK2		
29	27		P7_1		TA0IN/TB5IN	RXD2/SCL2/SCLMM		
30	28		P7_0		TA0OUT	TXD2/SDA2/SDAMM		
31	29		P6_7			TXD1/SDA1		
32	30		P6_6			RXD1/SCL1		
33	31		P6_5			CLK1		
34	32		P6_4			CTS1/RTS1/CTS0/ CLKS1		
35	33		P6_3			TXD0/SDA0		
36	34		P6_2			RXD0/SCL0		
37	35		P6_1			CLK0		
38	36		P6_0		RTCOUT	$\overline{\text{CTS0/RTS0}}$		
39	37	CLKOUT	P5_7					$\overline{\text{RDY}}$
40	38		P5_6					ALE
41	39		P5_5					$\overline{\text{HOLD}}$
42	40		P5_4					$\overline{\text{HLDA}}$
43	41		P5_3					BCLK
44	42		P5_2					$\overline{\text{RD}}$
45	43		P5_1					$\overline{\text{WRH/BHE}}$
46	44		P5_0					$\overline{\text{WRL/WR}}$
47	45		P4_7		PWM1	TXD7/SDA7		$\overline{\text{CS3}}$
48	46		P4_6		PWM0	RXD7/SCL7		$\overline{\text{CS2}}$
49	47		P4_5			CLK7		$\overline{\text{CS1}}$
50	48		P4_4			$\overline{\text{CTS7/RTS7}}$		$\overline{\text{CS0}}$

Downloaded from Arrow.com.

Table 1.11 Pin Names for the 100-Pin Package (2/2)

Pin No.		Control Pin	Port	I/O Pin for Peripheral Function				Bus Control Pin
FA	FB			Interrupt	Timer	Serial interface	A/D converter, D/A converter	
51	49		P4_3					A19
52	50		P4_2					A18
53	51		P4_1					A17
54	52		P4_0					A16
55	53		P3_7					A15
56	54		P3_6					A14
57	55		P3_5					A13
58	56		P3_4					A12
59	57		P3_3					A11
60	58		P3_2					A10
61	59		P3_1					A9
62	60	VCC2						
63	61		P3_0					A8, [A8/D7]
64	62	VSS						
65	63		P2_7				AN2_7	A7, [A7/D7], [A7/D6]
66	64		P2_6				AN2_6	A6, [A6/D6], [A6/D5]
67	65		P2_5	$\overline{\text{INT7}}$			AN2_5	A5, [A5/D5], [A5/D4]
68	66		P2_4	$\overline{\text{INT6}}$			AN2_4	A4, [A4/D4], [A4/D3]
69	67		P2_3				AN2_3	A3, [A3/D3], [A3/D2]
70	68		P2_2				AN2_2	A2, [A2/D2], [A2/D1]
71	69		P2_1				AN2_1	A1, [A1/D1], [A1/D0]
72	70		P2_0				AN2_0	A0, [A0/D0], A0
73	71		P1_7	$\overline{\text{INT5}}$	IDU			D15
74	72		P1_6	$\overline{\text{INT4}}$	IDW			D14
75	73		P1_5	$\overline{\text{INT3}}$	IDV			D13
76	74		P1_4					D12
77	75		P1_3			TXD6/SDA6		D11
78	76		P1_2			RXD6/SCL6		D10
79	77		P1_1			CLK6		D9
80	78		P1_0			$\overline{\text{CTS6}}$/$\overline{\text{RTS6}}$		D8
81	79		P0_7				AN0_7	D7
82	80		P0_6				AN0_6	D6
83	81		P0_5				AN0_5	D5
84	82		P0_4				AN0_4	D4
85	83		P0_3				AN0_3	D3
86	84		P0_2				AN0_2	D2
87	85		P0_1				AN0_1	D1
88	86		P0_0				AN0_0	D0
89	87		P10_7	$\overline{\text{KI3}}$			AN7	
90	88		P10_6	$\overline{\text{KI2}}$			AN6	
91	89		P10_5	$\overline{\text{KI1}}$			AN5	
92	90		P10_4	$\overline{\text{KI0}}$			AN4	
93	91		P10_3				AN3	
94	92		P10_2				AN2	
95	93		P10_1				AN1	
96	94	AVSS						
97	95		P10_0				AN0	
98	96	VREF						
99	97	AVCC						
100	98		P9_7			SIN4	$\overline{\text{ADTRG}}$	

Downloaded from Arrow.com.

1.6 Pin Functions

Table 1.12 Pin Functions for the 128-Pin Package (1/3)

Signal Name	Pin Name	I/O	Power Supply	Description
Power supply input	VCC1, VCC2, VSS	I	-	Apply 2.7 to 5.5 V to pins VCC1 and VCC2 (VCC1 ≥ VCC2), and 0 V to the VSS pin.
Analog power supply input	AVCC, AVSS	I	VCC1	This is the power supply for the A/D and D/A converters. Connect the AVCC pin to VCC1, and connect the AVSS pin to VSS.
Reset input	$\overline{\text{RESET}}$	I	VCC1	Driving this pin low resets the MCU.
CNVSS	CNVSS	I	VCC1	Input pin to switch processor modes. After a reset, to start operating in single-chip mode, connect the CNVSS pin to VSS via a resistor. To start operating in microprocessor mode, connect the pin to VCC1.
External data bus width select input	BYTE	I	VCC1	Input pin to select the data bus of the external area. The data bus is 16 bits when it is low and 8 bits when it is high. This pin must be fixed either high or low. Connect the BYTE pin to VSS in single-chip mode.
Bus control pins	D0 to D7	I/O	VCC2	Inputs or outputs data (D0 to D7) while accessing an external area with a separate bus.
	D8 to D15	I/O	VCC2	Inputs or outputs data (D8 to D15) while accessing an external area with a 16-bit separate bus.
	A0 to A19	O	VCC2	Outputs address bits A0 to A19.
	A0/D0 to A7/D7	I/O	VCC2	Inputs or outputs data (D0 to D7) and outputs address bits (A0 to A7) by timesharing, while accessing an external area with an 8-bit multiplexed bus.
	A1/D0 to A8/D7	I/O	VCC2	Inputs or outputs data (D0 to D7) and outputs address bits (A1 to A8) by timesharing, while accessing an external area with a 16-bit multiplexed bus.
	$\overline{\text{CS0}}$ to $\overline{\text{CS3}}$	O	VCC2	Outputs chip-select signals $\overline{\text{CS0}}$ to $\overline{\text{CS3}}$ to specify an external area.
	$\overline{\text{WRL}}$/$\overline{\text{WR}}$ $\overline{\text{WRH}}$/$\overline{\text{BHE}}$ $\overline{\text{RD}}$	O	VCC2	Outputs $\overline{\text{WRL}}$, $\overline{\text{WRH}}$, ($\overline{\text{WR}}$, $\overline{\text{BHE}}$), and $\overline{\text{RD}}$ signals. $\overline{\text{WRL}}$ and $\overline{\text{WRH}}$ can be switched with $\overline{\text{BHE}}$ and $\overline{\text{WR}}$. • $\overline{\text{WRL}}$, $\overline{\text{WRH}}$, and $\overline{\text{RD}}$ selected If the external data bus is 16 bits, data is written to an even address in an external area when $\overline{\text{WRL}}$ is driven low. Data is written to an odd address when $\overline{\text{WRH}}$ is driven low. Data is read when $\overline{\text{RD}}$ is driven low. • $\overline{\text{WR}}$, $\overline{\text{BHE}}$, and $\overline{\text{RD}}$ selected Data is written to an external area when $\overline{\text{WR}}$ is driven low. Data in an external area is read when $\overline{\text{RD}}$ is driven low. An odd address is accessed when $\overline{\text{BHE}}$ is driven low. Select $\overline{\text{WR}}$, $\overline{\text{BHE}}$, and $\overline{\text{RD}}$ when using an 8-bit external data bus.
	ALE	O	VCC2	Outputs an ALE signal to latch the address.
	$\overline{\text{HOLD}}$	I	VCC2	$\overline{\text{HOLD}}$ input is unavailable. Connect the $\overline{\text{HOLD}}$ pin to VCC2 via a resistor (pull-up).
	$\overline{\text{HLDA}}$	O	VCC2	In a hold state, $\overline{\text{HLDA}}$ outputs a low-level signal.
	$\overline{\text{RDY}}$	I	VCC2	The MCU bus is placed in wait state while the $\overline{\text{RDY}}$ pin is driven low.

Power supply: VCC2 is used to supply power to the external bus associated pins. The dual power supply configuration allows VCC2 to interface at a different voltage than VCC1.

Downloaded from Arrow.com.

Table 1.13 Pin Functions for the 128-Pin Package (2/3)

Signal Name	Pin Name	I/O	Power Supply	Description
Main clock input	XIN	I	VCC1	I/O for the main clock oscillator. Connect a ceramic resonator or crystal between pins XIN and XOUT. (1) Input an external clock to XIN pin and leave XOUT pin open.
Main clock output	XOUT	O	VCC1	
Sub clock input	XCIN	I	VCC1	I/O for a sub clock oscillator. Connect a crystal between pins XCIN and XCOUT. (1) Input an external clock to XCIN pin and leave XCOUT pin open.
Sub clock output	XCOUT	O	VCC1	
BCLK output	BCLK	O	VCC2	Outputs the BCLK signal.
Clock output	CLKOUT	O	VCC2	Outputs a clock with the same frequency as fC, f1, f8, or f32.
$\overline{\text{INT}}$ interrupt input	$\overline{\text{INT0}}$ to $\overline{\text{INT2}}$	I	VCC1	Input for the $\overline{\text{INT}}$ interrupt.
	$\overline{\text{INT3}}$ to $\overline{\text{INT7}}$	I	VCC2	
$\overline{\text{NMI}}$ interrupt input	$\overline{\text{NMI}}$	I	VCC1	Input for the $\overline{\text{NMI}}$ interrupt.
Key input interrupt input	$\overline{\text{KI0}}$ to $\overline{\text{KI3}}$	I	VCC1	Input for the key input interrupt.
Timer A	TA0OUT to TA4OUT	I/O	VCC1	I/O for timers A0 to A4 (TA0OUT is N-channel open drain output).
	TA0IN to TA4IN	I	VCC1	Input for timers A0 to A4.
	ZP	I	VCC1	Input for Z-phase.
Timer B	TB0IN to TB5IN	I	VCC1	Input for timers B0 to B5.
Three-phase motor control timer	U, $\overline{\text{U}}$, V, $\overline{\text{V}}$, W, $\overline{\text{W}}$	O	VCC1	Output for the three-phase motor control timer.
	$\overline{\text{SD}}$	I	VCC1	Forced cutoff input.
	IDU, IDV, IDW	I	VCC2	Input for the position data.
Real-time clock output	RTCOUT	O	VCC1	Output for the real-time clock.
PWM output	PWM0, PWM1	O	VCC1, VCC2	PWM output.
Remote control signal receiver input	PMC0, PMC1	I	VCC1	Input for the remote control signal receiver.
Serial interface UART0 to UART2, UART5 to UART7	$\overline{\text{CTS0}}$ to $\overline{\text{CTS2}}$, $\overline{\text{CTS5}}$	I	VCC1	Input pins to control data transmission.
	$\overline{\text{CTS6}}$, $\overline{\text{CTS7}}$	I	VCC2	
	$\overline{\text{RTS0}}$ to $\overline{\text{RTS2}}$, $\overline{\text{RTS5}}$	O	VCC1	Output pins to control data reception.
	$\overline{\text{RTS6}}$, $\overline{\text{RTS7}}$	O	VCC2	
	CLK0 to CLK2, CLK5	I/O	VCC1	Transmit/receive clock I/O.
	CLK6, CLK7	I/O	VCC2	
	RXD0 to RXD2, RXD5	I	VCC1	Serial data input.
	RXD6, RXD7	I	VCC2	
	TXD0 to TXD2, TXD5	O	VCC1	Serial data output. (2)
	TXD6, TXD7	O	VCC2	
	CLKS1	O	VCC1	Output for the transmit/receive clock multiple-pin output function.

Notes:
1. Contact the manufacturer of crystal/ceramic resonator regarding the oscillation characteristics.
2. TXD2, SDA2, and SCL2 are N-channel open drain output pins. TXDi (i = 0, 1, 5 to 7), SDAi, and SCLi can be selected as CMOS output pins or N-channel open drain output pins.

Downloaded from Arrow.com.

Table 1.14 Pin Functions for the 128-Pin Package (3/3)

Signal Name	Pin Name	I/O	Power Supply	Description
UART0 to UART2, UART5 to UART7 I^2C mode	SDA0 to SDA2, SDA5	I/O	VCC1	Serial data I/O.
	SDA6, SDA7	I/O	VCC2	
	SCL0 to SCL2, SCL5	I/O	VCC1	Transmit/receive clock I/O.
	SCL6, SCL7	I/O	VCC2	
Serial interface SI/O3, SI/O4	CLK3, CLK4	I/O	VCC1	Transmit/receive clock I/O.
	SIN3, SIN4	I	VCC1	Serial data input.
	SOUT3, SOUT4	O	VCC1	Serial data output.
Multi-master I^2C-bus interface	SDAMM	I/O	VCC1	Serial data I/O (N-channel open drain output).
	SCLMM	I/O	VCC1	Transmit/receive clock I/O (N-channel open drain output).
CEC I/O	CEC	I/O	VCC1	CEC I/O (N-channel open drain output).
Reference voltage input	VREF	I	VCC1	Reference voltage input for the A/D and D/A converters.
A/D converter	AN0 to AN7	I	VCC1	Analog input.
	AN0_0 to AN0_7 AN2_0 to AN2_7	I	VCC2	
	$\overline{\text{ADTRG}}$	I	VCC1	External trigger input.
	ANEX0, ANEX1	I	VCC1	Extended analog input.
D/A converter	DA0, DA1	O	VCC1	Output pin the D/A converter.
I/O ports	P0_0 to P0_7 P1_0 to P1_7 P2_0 to P2_7 P3_0 to P3_7 P4_0 to P4_7 P5_0 to P5_7 P12_0 to P12_7 P13_0 to P13_7	I/O	VCC2	8-bit CMOS I/O ports. A direction register determines whether each pin is used as an input port or an output port. A pull-up resistor may be enabled or disabled for input ports in 4-bit units.
	P6_0 to P6_7 P7_0 to P7_7 P8_0 to P8_7 P9_0 to P9_7 P10_0 to P10_7 P11_0 to P11_7	I/O	VCC1	8-bit I/O ports having equivalent functions to P0. However, P7_0, P7_1, and P8_5 are N-channel open drain output ports. No pull-up resistor is provided. P8_5 is an input port for verifying the $\overline{\text{NMI}}$ pin level and shares a pin with $\overline{\text{NMI}}$.
	P14_0, P14_1	I/O	VCC1	I/O ports having equivalent functions to P0.

Downloaded from Arrow.com.

Table 1.15 Pin Functions for the 100-Pin Package (1/3)

Signal Name	Pin Name	I/O	Power Supply	Description
Power supply input	VCC1, VCC2, VSS	I	-	Apply 2.7 to 5.5 V to pins VCC1 and VCC2 (VCC1 ≥ VCC2) and 0 V to the VSS pin.
Analog power supply input	AVCC, AVSS	I	VCC1	This is the power supply for the A/D and D/A converters. Connect the AVCC pin to VCC1, and connect the AVSS pin to VSS.
Reset input	$\overline{\text{RESET}}$	I	VCC1	Driving this pin low resets the MCU.
CNVSS	CNVSS	I	VCC1	Input pin to switch processor modes. After a reset, to start operating in single-chip mode, connect the CNVSS pin to VSS via a resistor. To start operating in microprocessor mode, connect the pin to VCC1.
External data bus width select input	BYTE	I	VCC1	Input pin to select the data bus of the external area. The data bus is 16 bits when it is low, and 8 bits when it is high. This pin must be fixed either high or low. Connect the BYTE pin to VSS in single-chip mode.
Bus control pins	D0 to D7	I/O	VCC2	Inputs or outputs data (D0 to D7) while accessing an external area with a separate bus.
	D8 to D15	I/O	VCC2	Inputs or outputs data (D8 to D15) while accessing an external area with a 16-bit separate bus.
	A0 to A19	O	VCC2	Outputs address bits A0 to A19.
	A0/D0 to A7/D7	I/O	VCC2	Inputs or outputs data (D0 to D7) and outputs address bits (A0 to A7) by timesharing, while accessing an external area with an 8-bit multiplexed bus.
	A1/D0 to A8/D7	I/O	VCC2	Inputs or outputs data (D0 to D7) and outputs address bits (A1 to A8) by timesharing, while accessing an external area with a 16-bit multiplexed bus.
	$\overline{\text{CS0}}$ to $\overline{\text{CS3}}$	O	VCC2	Outputs chip-select signals $\overline{\text{CS0}}$ to $\overline{\text{CS3}}$ to specify an external area.
	$\overline{\text{WRL}}$/$\overline{\text{WR}}$ $\overline{\text{WRH}}$/$\overline{\text{BHE}}$ $\overline{\text{RD}}$	O	VCC2	Outputs $\overline{\text{WRL}}$, $\overline{\text{WRH}}$, ($\overline{\text{WR}}$, $\overline{\text{BHE}}$), and $\overline{\text{RD}}$ signals. $\overline{\text{WRL}}$ and $\overline{\text{WRH}}$ can be switched with $\overline{\text{BHE}}$ and $\overline{\text{WR}}$. • $\overline{\text{WRL}}$, $\overline{\text{WRH}}$, and $\overline{\text{RD}}$ selected If the external data bus is 16 bits, data is written to an even address in an external area when $\overline{\text{WRL}}$ is driven low. Data is written to an odd address when $\overline{\text{WRH}}$ is driven low. Data is read when $\overline{\text{RD}}$ is driven low. • $\overline{\text{WR}}$, $\overline{\text{BHE}}$, and $\overline{\text{RD}}$ selected Data is written to an external area when $\overline{\text{WR}}$ is driven low. Data in an external area is read when $\overline{\text{RD}}$ is driven low. An odd address is accessed when $\overline{\text{BHE}}$ is driven low. Select $\overline{\text{WR}}$, $\overline{\text{BHE}}$, and $\overline{\text{RD}}$ when using an 8-bit external data bus.
	ALE	O	VCC2	Outputs an ALE signal to latch the address.
	$\overline{\text{HOLD}}$	I	VCC2	$\overline{\text{HOLD}}$ input is unavailable. Connect the $\overline{\text{HOLD}}$ pin to VCC2 via a resistor (pull-up).
	$\overline{\text{HLDA}}$	O	VCC2	In a hold state, $\overline{\text{HLDA}}$ outputs a low-level signal.
	$\overline{\text{RDY}}$	I	VCC2	The MCU bus is placed in a wait state while the $\overline{\text{RDY}}$ pin is driven low.

Power supply: VCC2 is used to supply power to the external bus associated pins. The dual power supply configuration allows VCC2 to interface at a different voltage than VCC1.

Downloaded from Arrow.com.

Table 1.16 Pin Functions for the 100-Pin Package (2/3)

Signal Name	Pin Name	I/O	Power Supply	Description
Main clock input	XIN	I	VCC1	I/O for the main clock oscillator. Connect a ceramic resonator or crystal between pins XIN and XOUT. (1) Input an external clock to XIN pin and leave XOUT pin open.
Main clock output	XOUT	O	VCC1	
Sub clock input	XCIN	I	VCC1	I/O for a sub clock oscillator. Connect a crystal between XCIN pin and XCOUT pin. (1) Input an external clock to XCIN pin and leave XCOUT pin open.
Sub clock output	XCOUT	O	VCC1	
BCLK output	BCLK	O	VCC2	Outputs the BCLK signal.
Clock output	CLKOUT	O	VCC2	Outputs a clock with the same frequency as fC, f1, f8, or f32.
$\overline{\text{INT}}$ interrupt input	$\overline{\text{INT0}}$ to $\overline{\text{INT2}}$	I	VCC1	Input for the $\overline{\text{INT}}$ interrupt.
	$\overline{\text{INT3}}$ to $\overline{\text{INT7}}$	I	VCC2	
$\overline{\text{NMI}}$ interrupt input	$\overline{\text{NMI}}$	I	VCC1	Input for the $\overline{\text{NMI}}$ interrupt.
Key input interrupt input	$\overline{\text{KI0}}$ to $\overline{\text{KI3}}$	I	VCC1	Input for the key input interrupt.
Timer A	TA0OUT to TA4OUT	I/O	VCC1	I/O for timers A0 to A4 (TA0OUT is N-channel open drain output).
	TA0IN to TA4IN	I	VCC1	Input for timers A0 to A4.
	ZP	I	VCC1	Input for Z-phase.
Timer B	TB0IN to TB5IN	I	VCC1	Input for timers B0 to B5.
Three-phase motor control timer	U, $\overline{\text{U}}$, V, $\overline{\text{V}}$, W, $\overline{\text{W}}$	O	VCC1	Output for the three-phase motor control timer.
	$\overline{\text{SD}}$	I	VCC1	Forced cutoff input.
	IDU, IDV, IDW	I	VCC2	Input for the position data.
Real-time clock output	RTCOUT	O	VCC1	Output for the real-time clock.
PWM output	PWM0, PWM1	O	VCC1, VCC2	PWM output.
Remote control signal receiver input	PMC0, PMC1	I	VCC1	Input for the remote control signal receiver.
Serial interface UART0 to UART2, UART5 to UART7	$\overline{\text{CTS0}}$ to $\overline{\text{CTS2}}$, $\overline{\text{CTS5}}$	I	VCC1	Input pins to control data transmission.
	$\overline{\text{CTS6}}$, $\overline{\text{CTS7}}$	I	VCC2	
	$\overline{\text{RTS0}}$ to $\overline{\text{RTS2}}$, $\overline{\text{RTS5}}$	O	VCC1	Output pins to control data reception.
	$\overline{\text{RTS6}}$, $\overline{\text{RTS7}}$	O	VCC2	
	CLK0 to CLK2, CLK5	I/O	VCC1	Transmit/receive clock I/O.
	CLK6, CLK7	I/O	VCC2	
	RXD0 to RXD2, RXD5	I	VCC1	Serial data input.
	RXD6, RXD7	I	VCC2	
	TXD0 to TXD2, TXD5	O	VCC1	Serial data output. (2)
	TXD6, TXD7	O	VCC2	
	CLKS1	O	VCC1	Output for the transmit/receive clock multiple-pin output function.

Notes:
1. Contact the manufacturer of crystal/ceramic resonator regarding the oscillation characteristics.
2. TXD2, SDA2, and SCL2 are N-channel open drain output pins. TXDi (i = 0, 1, 5 to 7), SDAi, and SCLi can be selected as CMOS output pins or N-channel open drain output pins.

Downloaded from Arrow.com.

Table 1.17 Pin Functions for the 100-Pin Package (3/3)

Signal Name	Pin Name	I/O	Power Supply	Description
UART0 to UART2, UART5 to UART7 I^2C mode	SDA0 to SDA2, SDA5	I/O	VCC1	Serial data I/O.
	SDA6, SDA7	I/O	VCC2	
	SCL0 to SCL2, SCL5	I/O	VCC1	Transmit/receive clock I/O.
	SCL6, SCL7	I/O	VCC2	
Serial interface SI/O3, SI/O4	CLK3, CLK4	I/O	VCC1	Transmit/receive clock I/O.
	SIN3, SIN4	I	VCC1	Serial data input.
	SOUT3, SOUT4	O	VCC1	Serial data output.
Multi-master I^2C-bus interface	SDAMM	I/O	VCC1	Serial data I/O (N-channel open drain output).
	SCLMM	I/O	VCC1	Transmit/receive clock I/O (N-channel open drain output).
CEC I/O	CEC	I/O	VCC1	CEC I/O (N-channel open drain output).
Reference voltage input	VREF	I	VCC1	Reference voltage input for the A/D and D/A converters.
A/D converter	AN0 to AN7	I	VCC1	Analog input.
	AN0_0 to AN0_7 AN2_0 to AN2_7	I	VCC2	
	$\overline{\text{ADTRG}}$	I	VCC1	External trigger input.
	ANEX0, ANEX1	I	VCC1	Extended analog input.
D/A converter	DA0, DA1	O	VCC1	Output for the D/A converter.
I/O ports	P0_0 to P0_7 P1_0 to P1_7 P2_0 to P2_7 P3_0 to P3_7 P4_0 to P4_7 P5_0 to P5_7	I/O	VCC2	8-bit CMOS I/O ports. A direction register determines whether each pin is used as an input port or an output port. A pull-up resistor may be enabled or disabled for input ports in 4-bit units.
	P6_0 to P6_7 P7_0 to P7_7 P8_0 to P8_7 P9_0 to P9_7 P10_0 to P10_7	I/O	VCC1	8-bit I/O ports having equivalent functions to P0. However, P7_0, P7_1, and P8_5 are N-channel open drain output ports. No pull-up resistor is provided. P8_5 is an input port for verifying the $\overline{\text{NMI}}$ pin level and shares a pin with $\overline{\text{NMI}}$.

Downloaded from Arrow.com.

2. Central Processing Unit (CPU)

Figure 2.1 shows the CPU registers. Seven registers (R0, R1, R2, R3, A0, A1, and FB) out of 13 compose a register bank, and there are two register banks.

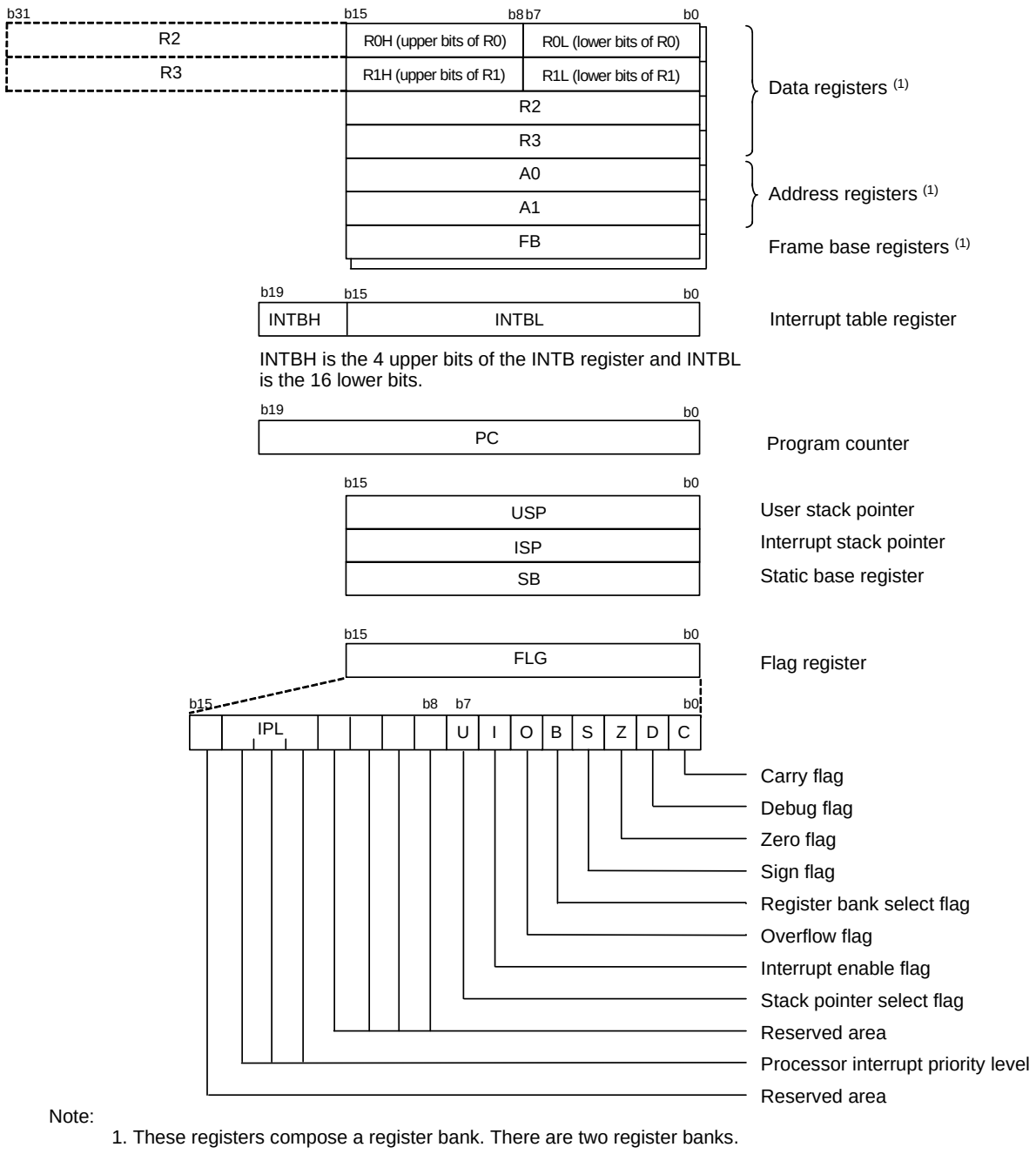

Note:
1. These registers compose a register bank. There are two register banks.

Figure 2.1 CPU Registers

Downloaded from Arrow.com.

2.1 Data Registers (R0, R1, R2, and R3)

R0, R1, R2, and R3 are 16-bit registers used for transfer, arithmetic, and logic operations. R0 and R1 can be split into upper (R0H/R1H) and lower (R0L/R1L) bits to be used separately as 8-bit data registers.
R0 can be combined with R2, and R3 can be combined with R1 and be used as 32-bit data registers R2R0 and R3R1, respectively.

2.2 Address Registers (A0 and A1)

A0 and A1 are 16-bit registers used for indirect addressing, relative addressing, transfer, arithmetic, and logic operations. A0 can be combined with A1 and used as a 32-bit address register (A1A0).

2.3 Frame Base Register (FB)

FB is a 16-bit register that is used for FB relative addressing.

2.4 Interrupt Table Register (INTB)

INTB is a 20-bit register that indicates the start address of a relocatable interrupt vector table.

2.5 Program Counter (PC)

The PC is 20 bits wide and indicates the address of the next instruction to be executed.

2.6 User Stack Pointer (USP) and Interrupt Stack Pointer (ISP)

The USP and ISP stack pointers (SP) are each comprised of 16 bits. The U flag is used to switch between USP and ISP.

2.7 Static Base Register (SB)

SB is a 16-bit register used for SB relative addressing.

2.8 Flag Register (FLG)

FLG is an 11-bit register that indicates the CPU state.

2.8.1 Carry Flag (C Flag)

The C flag retains a carry, borrow, or shift-out bit generated by the arithmetic/logic unit.

2.8.2 Debug Flag (D Flag)

The D flag is for debugging only. Set it to 0.

2.8.3 Zero Flag (Z Flag)

The Z flag becomes 1 when an arithmetic operation results in 0. Otherwise, it becomes 0.

2.8.4 Sign Flag (S Flag)

The S flag becomes 1 when an arithmetic operation results in a negative value. Otherwise, it becomes 0.

2.8.5 Register Bank Select Flag (B Flag)

Register bank 0 is selected when the B flag is 0. Register bank 1 is selected when this flag is 1.

2.8.6 Overflow Flag (O Flag)

The O flag becomes 1 when an arithmetic operation results in an overflow. Otherwise, it becomes 0.

Downloaded from Arrow.com.

2.8.7 Interrupt Enable Flag (I Flag)

The I flag enables maskable interrupts.
Maskable interrupts are disabled when the I flag is 0, and enabled when it is 1. The I flag becomes 0 when an interrupt request is accepted.

2.8.8 Stack Pointer Select Flag (U Flag)

ISP is selected when the U flag is 0. USP is selected when the U flag is 1.
The U flag becomes 0 when a hardware interrupt request is accepted, or the INT instruction of software interrupt number 0 to 31 is executed.

2.8.9 Processor Interrupt Priority Level (IPL)

IPL is 3 bits wide and assigns processor interrupt priority levels from 0 to 7.
If a requested interrupt has higher priority than IPL, the interrupt request is enabled.

2.8.10 Reserved Areas

Only set these bits to 0. The read value is undefined.

Downloaded from Arrow.com.

3. Address Space

3.1 Address Space

The M16C/65 Group has a 1 MB address space from 00000h to FFFFFh. Address space is expandable to 4 MB with the memory area expansion function. Addresses 40000h to BFFFFh can be used as external areas from bank 0 to bank 7. Figure 3.1 shows the Address Space. Areas that can be accessed vary depending on processor mode and the status of each control bit.

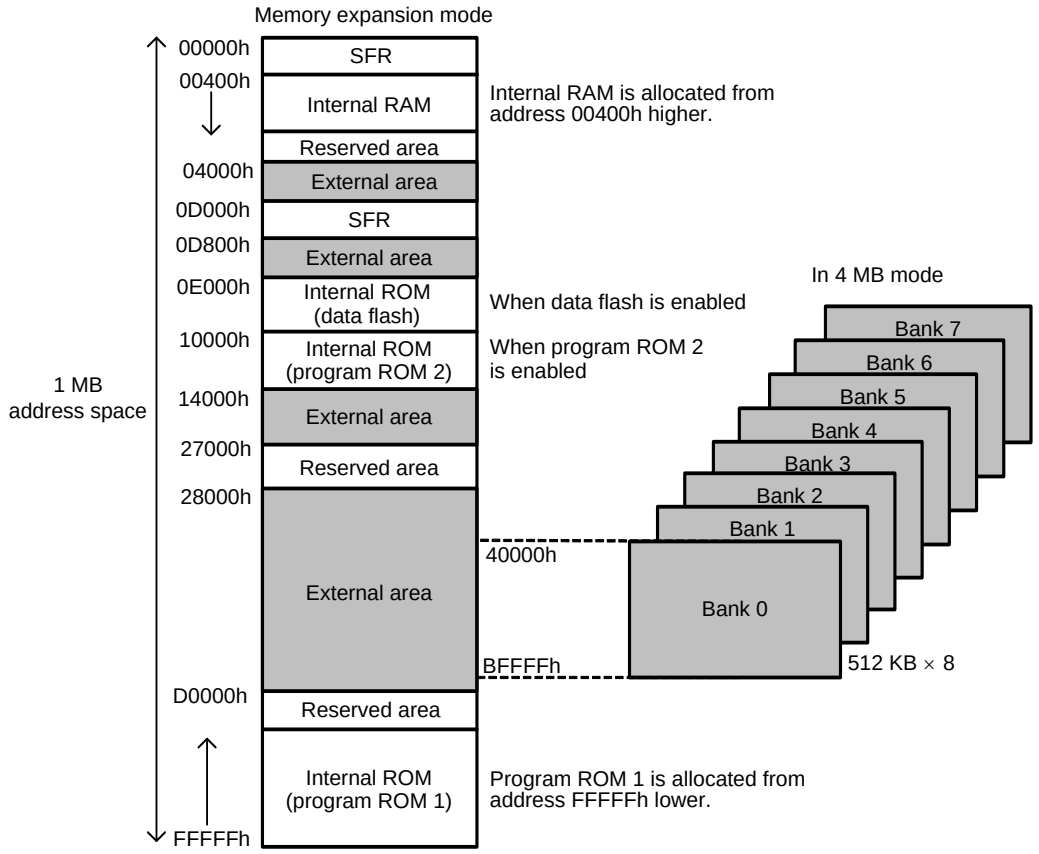

Notes:
1. Do not access reserved areas.
2. The figure above applies under the following conditions:
   - The PM13 bit in the PM1 register is 0
     (addresses 04000h to 0CFFFh and 80000h to CFFFFh are used as external areas)
   - The IRON bit in the PRG2C register is 0
     (addresses 40000h to 7FFFFh are used as an external area)

Figure 3.1 Address Space

Downloaded from Arrow.com.

3.2 Memory Map

Special function registers (SFRs) are allocated from address 00000h to 003FFh and from 0D000h to 0D7FFh. Peripheral function control registers are located here. All blank areas within SFRs are reserved. Do not access these areas.

Internal RAM is allocated from address 00400h and higher, with 10 KB of internal RAM allocated from 00400h to 02BFFh. Internal RAM is used not only for data storage, but also for the stack area when subroutines are called or when an interrupt request is accepted.

The internal ROM is flash memory. Three internal ROM areas are available: data flash, program ROM 1, and program ROM 2.

The data flash is allocated from 0E000h to 0FFFFh. This data flash area is mostly used for data storage, but can also store programs.

Program ROM 2 is allocated from 10000h to 13FFFh. Program ROM 1 is allocated from FFFFFh and lower, with the 64 KB program ROM 1 area allocated from address F0000h to FFFFFh.

The special page vectors are allocated from FFE00h to FFFD7h. They are used for the JMPS and JSRS instructions. Refer to the M16C/60, M16C/20, M16C/Tiny Series Software Manual for details.

The fixed vector table for interrupts is allocated from FFFDCh to FFFFFh.

The 256 bytes beginning with the start address set in the INTB register compose the relocatable vector table for interrupts.

Figure 3.2 shows the Memory Map.

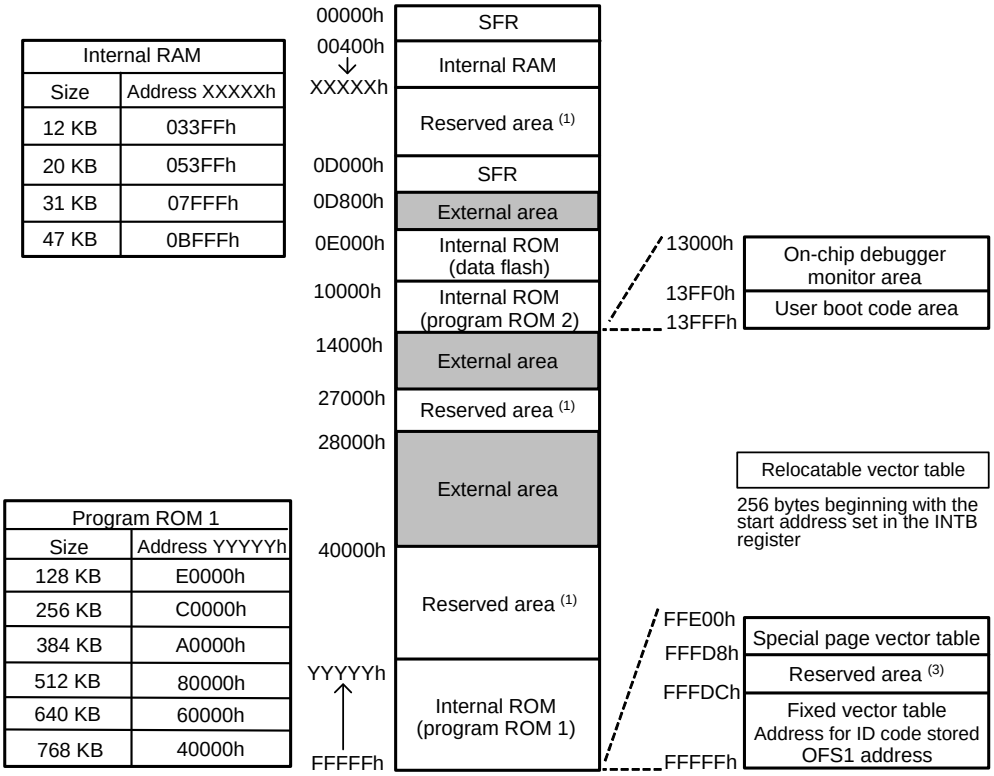

Notes:
1. Do not access reserved areas.
2. The figure above applies under the following conditions:
   - Memory expansion mode
   - The PM10 bit in the PM1 register is 1
     (addresses 0E000h to 0FFFFh are used as data flash)
   - The PRG2C0 bit in the PRG2C register is 0 (program ROM 2 enabled)
   - The PM13 bit in the PM1 register is 1
     (all areas in internal RAM, and the program ROM 1 area from 80000h are usable)
   - The IRON bit in the PRG2C register is 1
     (program ROM 1 in addresses 40000h to 7FFFFh enabled)
3. Do not change the data from FFh.

Figure 3.2 Memory Map

Downloaded from Arrow.com.

3.3 Accessible Area in Each Mode

Areas that can be accessed vary depending on processor mode and the status of each control bit. Figure 3.3 shows the Accessible Area in Each Mode.

In single-chip mode, the SFRs, internal RAM, and internal ROM can be accessed.

In memory expansion mode, the SFRs, internal RAM, internal ROM, and external areas can be accessed. Address space is expandable to 4 MB with the memory area expansion function.

In microprocessor mode, the SFRs, internal RAM, and external areas can be accessed. Address space is expandable to 4 MB with the memory area expansion function. Allocate ROM to the fixed vector table from FFFDCh to FFFFFh.

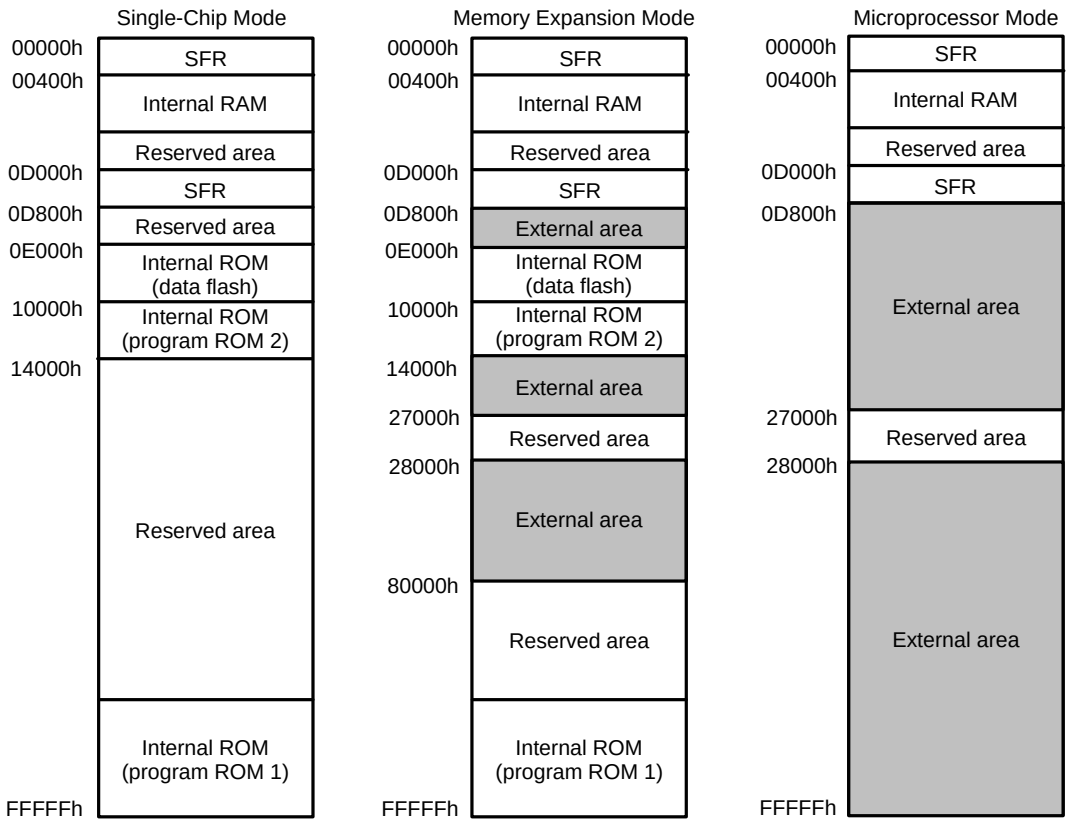

Notes:
1. Do not access reserved areas.
2. The figure above applies under the following conditions:
   Single-chip mode and memory expansion mode
   - The PM10 bit in the PM1 register is 1
     (addresses 0E000h to 0FFFFh are used as data flash)
   - The PRG2C0 bit in the PRG2C register is 0 (program ROM 2 enabled)
   - The PM13 bit in the PM1 register is 1
     (all areas in internal RAM, and the program ROM 1 area from 80000h are usable)
   - The IRON bit in the PRG2C register is 1
     (program ROM 1 in addresses 40000h to 7FFFFh enabled)

   Microprocessor mode
   - The PM10 bit is 0 (addresses 0E000h to 0FFFFh are used as the $\overline{CS2}$ area)
   - The PRG2C0 bit is 1 (program ROM 2 disabled)

Figure 3.3 Accessible Area in Each Mode

Downloaded from Arrow.com.

4. Special Function Registers (SFRs)

4.1 SFRs

An SFR is a control register for a peripheral function.

Table 4.1 SFR Information (1) (1)

Address	Register	Symbol	Reset Value
0000h			
0001h			
0002h			
0003h			
0004h	Processor Mode Register 0	PM0	0000 0000b (CNVSS pin is low) 0000 0011b (CNVSS pin is high) (2)
0005h	Processor Mode Register 1	PM1	0000 1000b
0006h	System Clock Control Register 0	CM0	0100 1000b
0007h	System Clock Control Register 1	CM1	0010 0000b
0008h	Chip Select Control Register	CSR	01h
0009h	External Area Recovery Cycle Control Register	EWR	XXXX XX00b
000Ah	Protect Register	PRCR	00h
000Bh	Data Bank Register	DBR	00h
000Ch	Oscillation Stop Detection Register	CM2	0X00 0010b (3)
000Dh			
000Eh			
000Fh			
0010h	Program 2 Area Control Register	PRG2C	XXXX XX00b
0011h	External Area Wait Control Expansion Register	EWC	00h
0012h	Peripheral Clock Select Register	PCLKR	0000 0011b
0013h			
0014h			
0015h	Clock Prescaler Reset Flag	CPSRF	0XXX XXXXb
0016h			
0017h			
0018h	Reset Source Determine Register	RSTFR	XX00 001Xb (hardware reset) (4)
0019h	Voltage Detector 2 Flag Register	VCR1	0000 1000b (5)
001Ah	Voltage Detector Operation Enable Register	VCR2	00h (5)
001Bh	Chip Select Expansion Control Register	CSE	00h
001Ch	PLL Control Register 0	PLC0	0X01 X010b
001Dh			
001Eh	Processor Mode Register 2	PM2	XX00 0X01b
001Fh			

X: Undefined

Notes:
1. The blank areas are reserved. No access is allowed.
2. Software reset, watchdog timer reset, oscillator stop detect reset, voltage monitor 1 reset, and voltage monitor 2 reset do not affect the following bits: bits PM01 and PM00 in the PM0 register.
3. Oscillator stop detect reset does not affect bits CM20, CM21, and CM27.
4. The state of bits in the RSTFR register depends on the reset type.
5. This is the reset value after hardware reset. Refer to the explanation of each register for details.

Downloaded from Arrow.com.

Table 4.2 SFR Information (2) (1)

Address	Register	Symbol	Reset Value
0020h			
0021h			
0022h	40 MHz On-Chip Oscillator Control Register 0	FRA0	XXXX XX00b
0023h			
0024h			
0025h			
0026h	Voltage Monitor Function Select Register	VWCE	00h
0027h			
0028h	Voltage Detector 1 Level Select Register	VD1LS	0000 1010b(2)
0029h			
002Ah	Voltage Monitor 0 Control Register	VW0C	1000 XX10b (2)
002Bh	Voltage Monitor 1 Control Register	VW1C	1000 1010b (2)
002Ch	Voltage Monitor 2 Control Register	VW2C	1000 0X10b (2)
002Dh			
002Eh			
002Fh			
0030h			
0031h			
0032h			
0033h			
0034h			
0035h			
0036h			
0037h			
0038h			
0039h			
003Ah			
003Bh			
003Ch			
003Dh			
003Eh			
003Fh			

X: Undefined

Notes:
1. The blank areas are reserved. No access is allowed.
2. This is the reset value after hardware reset. Refer to the explanation of each register for details.

Downloaded from Arrow.com.

Table 4.3 SFR Information (3) (1)

Address	Register	Symbol	Reset Value
0040h			
0041h			
0042h	$\overline{\text{INT7}}$ Interrupt Control Register	INT7IC	XX00 X000b
0043h	$\overline{\text{INT6}}$ Interrupt Control Register	INT6IC	XX00 X000b
0044h	$\overline{\text{INT3}}$ Interrupt Control Register	INT3IC	XX00 X000b
0045h	Timer B5 Interrupt Control Register	TB5IC	XXXX X000b
0046h	Timer B4 Interrupt Control Register UART1 Bus Collision Detection Interrupt Control Register	TB4IC U1BCNIC	XXXX X000b
0047h	Timer B3 Interrupt Control Register UART0 Bus Collision Detection Interrupt Control Register	TB3IC U0BCNIC	XXXX X000b
0048h	SI/O4 Interrupt Control Register $\overline{\text{INT5}}$ Interrupt Control Register	S4IC INT5IC	XX00 X000b
0049h	SI/O3 Interrupt Control Register $\overline{\text{INT4}}$ Interrupt Control Register	S3IC INT4IC	XX00 X000b
004Ah	UART2 Bus Collision Detection Interrupt Control Register	BCNIC	XXXX X000b
004Bh	DMA0 Interrupt Control Register	DM0IC	XXXX X000b
004Ch	DMA1 Interrupt Control Register	DM1IC	XXXX X000b
004Dh	Key Input Interrupt Control Register	KUPIC	XXXX X000b
004Eh	A/D Conversion Interrupt Control Register	ADIC	XXXX X000b
004Fh	UART2 Transmit Interrupt Control Register	S2TIC	XXXX X000b
0050h	UART2 Receive Interrupt Control Register	S2RIC	XXXX X000b
0051h	UART0 Transmit Interrupt Control Register	S0TIC	XXXX X000b
0052h	UART0 Receive Interrupt Control Register	S0RIC	XXXX X000b
0053h	UART1 Transmit Interrupt Control Register	S1TIC	XXXX X000b
0054h	UART1 Receive Interrupt Control Register	S1RIC	XXXX X000b
0055h	Timer A0 Interrupt Control Register	TA0IC	XXXX X000b
0056h	Timer A1 Interrupt Control Register	TA1IC	XXXX X000b
0057h	Timer A2 Interrupt Control Register	TA2IC	XXXX X000b
0058h	Timer A3 Interrupt Control Register	TA3IC	XXXX X000b
0059h	Timer A4 Interrupt Control Register	TA4IC	XXXX X000b
005Ah	Timer B0 Interrupt Control Register	TB0IC	XXXX X000b
005Bh	Timer B1 Interrupt Control Register	TB1IC	XXXX X000b
005Ch	Timer B2 Interrupt Control Register	TB2IC	XXXX X000b
005Dh	$\overline{\text{INT0}}$ Interrupt Control Register	INT0IC	XX00 X000b
005Eh	$\overline{\text{INT1}}$ Interrupt Control Register	INT1IC	XX00 X000b
005Fh	$\overline{\text{INT2}}$ Interrupt Control Register	INT2IC	XX00 X000b

X: Undefined

Note:
1. The blank areas are reserved. No access is allowed.

Downloaded from Arrow.com.

Table 4.4 SFR Information (4) (1)

Address	Register	Symbol	Reset Value
0060h			
0061h			
0062h			
0063h			
0064h			
0065h			
0066h			
0067h			
0068h			
0069h	DMA2 Interrupt Control Register	DM2IC	XXXX X000b
006Ah	DMA3 Interrupt Control Register	DM3IC	XXXX X000b
006Bh	UART5 Bus Collision Detection Interrupt Control Register CEC1 Interrupt Control Register	U5BCNIC CEC1IC	XXXX X000b
006Ch	UART5 Transmit Interrupt Control Register CEC2 Interrupt Control Register	S5TIC CEC2IC	XXXX X000b
006Dh	UART5 Receive Interrupt Control Register	S5RIC	XXXX X000b
006Eh	UART6 Bus Collision Detection Interrupt Control Register Real-Time Clock Periodic Interrupt Control Register	U6BCNIC RTCTIC	XXXX X000b
006Fh	UART6 Transmit Interrupt Control Register Real-Time Clock Compare Interrupt Control Register	S6TIC RTCCIC	XXXX X000b
0070h	UART6 Receive Interrupt Control Register	S6RIC	XXXX X000b
0071h	UART7 Bus Collision Detection Interrupt Control Register Remote Control Signal Receiver 0 Interrupt Control Register	U7BCNIC PMC0IC	XXXX X000b
0072h	UART7 Transmit Interrupt Control Register Remote Control Signal Receiver 1 Interrupt Control Register	S7TIC PMC1IC	XXXX X000b
0073h	UART7 Receive Interrupt Control Register	S7RIC	XXXX X000b
0074h			
0075h			
0076h			
0077h			
0078h			
0079h			
007Ah			
007Bh	I2C-bus Interface Interrupt Control Register	IICIC	XXXX X000b
007Ch	SCL/SDA Interrupt Control Register	SCLDAIC	XXXX X000b
007Dh			
007Eh			
007Fh			
0080h to 017Fh			

X: Undefined

Note:
1. The blank areas are reserved. No access is allowed.

Downloaded from Arrow.com.

Table 4.5 SFR Information (5) (1)

Address	Register	Symbol	Reset Value
0180h	DMA0 Source Pointer	SAR0	XXh
0181h			XXh
0182h			0Xh
0183h			
0184h	DMA0 Destination Pointer	DAR0	XXh
0185h			XXh
0186h			0Xh
0187h			
0188h	DMA0 Transfer Counter	TCR0	XXh
0189h			XXh
018Ah			
018Bh			
018Ch	DMA0 Control Register	DM0CON	0000 0X00b
018Dh			
018Eh			
018Fh			
0190h	DMA1 Source Pointer	SAR1	XXh
0191h			XXh
0192h			0Xh
0193h			
0194h	DMA1 Destination Pointer	DAR1	XXh
0195h			XXh
0196h			0Xh
0197h			
0198h	DMA1 Transfer Counter	TCR1	XXh
0199h			XXh
019Ah			
019Bh			
019Ch	DMA1 Control Register	DM1CON	0000 0X00b
019Dh			
019Eh			
019Fh			
01A0h	DMA2 Source Pointer	SAR2	XXh
01A1h			XXh
01A2h			0Xh
01A3h			
01A4h	DMA2 Destination Pointer	DAR2	XXh
01A5h			XXh
01A6h			0Xh
01A7h			
01A8h	DMA2 Transfer Counter	TCR2	XXh
01A9h			XXh
01AAh			
01ABh			
01ACh	DMA2 Control Register	DM2CON	0000 0X00b
01ADh			
01AEh			
01AFh			

X: Undefined

Note:
1. The blank areas are reserved. No access is allowed.

Downloaded from Arrow.com.

Table 4.6 SFR Information (6) (1)

Address	Register	Symbol	Reset Value
01B0h	DMA3 Source Pointer	SAR3	XXh
01B1h			XXh
01B2h			0Xh
01B3h			
01B4h	DMA3 Destination Pointer	DAR3	XXh
01B5h			XXh
01B6h			0Xh
01B7h			
01B8h	DMA3 Transfer Counter	TCR3	XXh
01B9h			XXh
01BAh			
01BBh			
01BCh	DMA3 Control Register	DM3CON	0000 0X00b
01BDh			
01BEh			
01BFh			
01C0h	Timer B0-1 Register	TB01	XXh
01C1h			XXh
01C2h	Timer B1-1 Register	TB11	XXh
01C3h			XXh
01C4h	Timer B2-1 Register	TB21	XXh
01C5h			XXh
01C6h	Pulse Period/Pulse Width Measurement Mode Function Select Register 1	PPWFS1	XXXX X000b
01C7h			
01C8h	Timer B Count Source Select Register 0	TBCS0	00h
01C9h	Timer B Count Source Select Register 1	TBCS1	X0h
01CAh			
01CBh	Timer AB Division Control Register 0	TCKDIVC0	0000 X000b
01CCh			
01CDh			
01CEh			
01CFh			
01D0h	Timer A Count Source Select Register 0	TACS0	00h
01D1h	Timer A Count Source Select Register 1	TACS1	00h
01D2h	Timer A Count Source Select Register 2	TACS2	X0h
01D3h			
01D4h	16-bit Pulse Width Modulation Mode Function Select Register	PWMFS	0XX0 X00Xb
01D5h	Timer A Waveform Output Function Select Register	TAPOFS	XXX0 0000b
01D6h			
01D7h			
01D8h	Timer A Output Waveform Change Enable Register	TAOW	XXX0 X00Xb
01D9h			
01DAh	Three-Phase Protect Control Register	TPRC	00h
01DBh			
01DCh			
01DDh			
01DEh			
01DFh			

X: Undefined

Note:
1. The blank areas are reserved. No access is allowed.

Downloaded from Arrow.com.

Table 4.7 SFR Information (7) (1)

Address	Register	Symbol	Reset Value
01E0h	Timer B3-1 Register	TB31	XXh
01E1h			XXh
01E2h	Timer B4-1 Register	TB41	XXh
01E3h			XXh
01E4h	Timer B5-1 Register	TB51	XXh
01E5h			XXh
01E6h	Pulse Period/Pulse Width Measurement Mode Function Select Register 2	PPWFS2	XXXX X000b
01E7h			
01E8h	Timer B Count Source Select Register 2	TBCS2	00h
01E9h	Timer B Count Source Select Register 3	TBCS3	X0h
01EAh			
01EBh			
01ECh			
01EDh			
01EEh			
01EFh			
01F0h	PMC0 Function Select Register 0	PMC0CON0	00h
01F1h	PMC0 Function Select Register 1	PMC0CON1	00XX 0000b
01F2h	PMC0 Function Select Register 2	PMC0CON2	0000 00X0b
01F3h	PMC0 Function Select Register 3	PMC0CON3	00h
01F4h	PMC0 Status Register	PMC0STS	00h
01F5h	PMC0 Interrupt Source Select Register	PMC0INT	00h
01F6h	PMC0 Compare Control Register	PMC0CPC	XXX0 X000b
01F7h	PMC0 Compare Data Register	PMC0CPD	00h
01F8h	PMC1 Function Select Register 0	PMC1CON0	XXX0 X000b
01F9h	PMC1 Function Select Register 1	PMC1CON1	XXXX 0X00b
01FAh	PMC1 Function Select Register 2	PMC1CON2	0000 00X0b
01FBh	PMC1 Function Select Register 3	PMC1CON3	00h
01FCh	PMC1 Status Register	PMC1STS	X000 X00Xb
01FDh	PMC1 Interrupt Source Select Register	PMC1INT	X000 X00Xb
01FEh			
01FFh			
0200h			
0201h			
0202h			
0203h			
0204h			
0205h	Interrupt Source Select Register 3	IFSR3A	00h
0206h	Interrupt Source Select Register 2	IFSR2A	00h
0207h	Interrupt Source Select Register	IFSR	00h
0208h			
0209h			
020Ah			
020Bh			
020Ch			
020Dh			
020Eh	Address Match Interrupt Enable Register	AIER	XXXX XX00b
020Fh	Address Match Interrupt Enable Register 2	AIER2	XXXX XX00b

X: Undefined

Note:
1. The blank areas are reserved. No access is allowed.

Downloaded from Arrow.com.

Table 4.8 SFR Information (8) (1)

Address	Register	Symbol	Reset Value
0210h	Address Match Interrupt Register 0	RMAD0	00h
0211h			00h
0212h			X0h
0213h			
0214h	Address Match Interrupt Register 1	RMAD1	00h
0215h			00h
0216h			X0h
0217h			
0218h	Address Match Interrupt Register 2	RMAD2	00h
0219h			00h
021Ah			X0h
021Bh			
021Ch	Address Match Interrupt Register 3	RMAD3	00h
021Dh			00h
021Eh			X0h
021Fh			
0220h	Flash Memory Control Register 0	FMR0	0000 0001b (Other than user boot mode) 0010 0001b (User boot mode)
0221h	Flash Memory Control Register 1	FMR1	00X0 XX0Xb
0222h	Flash Memory Control Register 2	FMR2	XXXX 0000b
0223h			
0224h			
0225h			
0226h			
0227h			
0228h			
0229h			
022Ah			
022Bh			
022Ch			
022Dh			
022Eh			
022Fh			
0230h	Flash Memory Control Register 6	FMR6	XX0X XX00b
0231h			
0232h			
0233h			
0234h			
0235h			
0236h			
0237h			
0238h			
0239h			
023Ah			
023Bh			
023Ch			
023Dh			
023Eh			
023Fh			

X: Undefined

Note:
1. The blank areas are reserved. No access is allowed.

Downloaded from Arrow.com.

Table 4.9 SFR Information (9) (1)

Address	Register	Symbol	Reset Value
0240h			
0241h			
0242h			
0243h			
0244h	UART0 Special Mode Register 4	U0SMR4	00h
0245h	UART0 Special Mode Register 3	U0SMR3	000X 0X0Xb
0246h	UART0 Special Mode Register 2	U0SMR2	X000 0000b
0247h	UART0 Special Mode Register	U0SMR	X000 0000b
0248h	UART0 Transmit/Receive Mode Register	U0MR	00h
0249h	UART0 Bit Rate Register	U0BRG	XXh
024Ah	UART0 Transmit Buffer Register	U0TB	XXh
024Bh			XXh
024Ch	UART0 Transmit/Receive Control Register 0	U0C0	0000 1000b
024Dh	UART0 Transmit/Receive Control Register 1	U0C1	00XX 0010b
024Eh	UART0 Receive Buffer Register	U0RB	XXh
024Fh			XXh
0250h	UART Transmit/Receive Control Register 2	UCON	X000 0000b
0251h			
0252h	UART Clock Select Register	UCLKSEL0	X0h
0253h			
0254h	UART1 Special Mode Register 4	U1SMR4	00h
0255h	UART1 Special Mode Register 3	U1SMR3	000X 0X0Xb
0256h	UART1 Special Mode Register 2	U1SMR2	X000 0000b
0257h	UART1 Special Mode Register	U1SMR	X000 0000b
0258h	UART1 Transmit/Receive Mode Register	U1MR	00h
0259h	UART1 Bit Rate Register	U1BRG	XXh
025Ah	UART1 Transmit Buffer Register	U1TB	XXh
025Bh			XXh
025Ch	UART1 Transmit/Receive Control Register 0	U1C0	0000 1000b
025Dh	UART1 Transmit/Receive Control Register 1	U1C1	00XX 0010b
025Eh	UART1 Receive Buffer Register	U1RB	XXh
025Fh			XXh
0260h			
0261h			
0262h			
0263h			
0264h	UART2 Special Mode Register 4	U2SMR4	00h
0265h	UART2 Special Mode Register 3	U2SMR3	000X 0X0Xb
0266h	UART2 Special Mode Register 2	U2SMR2	X000 0000b
0267h	UART2 Special Mode Register	U2SMR	X000 0000b
0268h	UART2 Transmit/Receive Mode Register	U2MR	00h
0269h	UART2 Bit Rate Register	U2BRG	XXh
026Ah	UART2 Transmit Buffer Register	U2TB	XXh
026Bh			XXh
026Ch	UART2 Transmit/Receive Control Register 0	U2C0	0000 1000b
026Dh	UART2 Transmit/Receive Control Register 1	U2C1	0000 0010b
026Eh	UART2 Receive Buffer Register	U2RB	XXh
026Fh			XXh

X: Undefined

Note:
1. The blank areas are reserved. No access is allowed.

Downloaded from Arrow.com.

Table 4.10 SFR Information (10) (1)

Address	Register	Symbol	Reset Value
0270h	SI/O3 Transmit/Receive Register	S3TRR	XXh
0271h			
0272h	SI/O3 Control Register	S3C	0100 0000b
0273h	SI/O3 Bit Rate Register	S3BRG	XXh
0274h	SI/O4 Transmit/Receive Register	S4TRR	XXh
0275h			
0276h	SI/O4 Control Register	S4C	0100 0000b
0277h	SI/O4 Bit Rate Register	S4BRG	XXh
0278h	SI/O3, 4 Control Register 2	S34C2	00XX X0X0b
0279h			
027Ah			
027Bh			
027Ch			
027Dh			
027Eh			
027Fh			
0280h			
0281h			
0282h			
0283h			
0284h	UART5 Special Mode Register 4	U5SMR4	00h
0285h	UART5 Special Mode Register 3	U5SMR3	000X 0X0Xb
0286h	UART5 Special Mode Register 2	U5SMR2	X000 0000b
0287h	UART5 Special Mode Register	U5SMR	X000 0000b
0288h	UART5 Transmit/Receive Mode Register	U5MR	00h
0289h	UART5 Bit Rate Register	U5BRG	XXh
028Ah	UART5 Transmit Buffer Register	U5TB	XXh
028Bh			XXh
028Ch	UART5 Transmit/Receive Control Register 0	U5C0	0000 1000b
028Dh	UART5 Transmit/Receive Control Register 1	U5C1	0000 0010b
028Eh	UART5 Receive Buffer Register	U5RB	XXh
028Fh			XXh
0290h			
0291h			
0292h			
0293h			
0294h	UART6 Special Mode Register 4	U6SMR4	00h
0295h	UART6 Special Mode Register 3	U6SMR3	000X 0X0Xb
0296h	UART6 Special Mode Register 2	U6SMR2	X000 0000b
0297h	UART6 Special Mode Register	U6SMR	X000 0000b
0298h	UART6 Transmit/Receive Mode Register	U6MR	00h
0299h	UART6 Bit Rate Register	U6BRG	XXh
029Ah	UART6 Transmit Buffer Register	U6TB	XXh
029Bh			XXh
029Ch	UART6 Transmit/Receive Control Register 0	U6C0	0000 1000b
029Dh	UART6 Transmit/Receive Control Register 1	U6C1	0000 0010b
029Eh	UART6 Receive Buffer Register	U6RB	XXh
029Fh			XXh

X: Undefined

Note:
1. The blank areas are reserved. No access is allowed.

Downloaded from Arrow.com.

Table 4.11 SFR Information (11) (1)

Address	Register	Symbol	Reset Value
02A0h			
02A1h			
02A2h			
02A3h			
02A4h	UART7 Special Mode Register 4	U7SMR4	00h
02A5h	UART7 Special Mode Register 3	U7SMR3	000X 0X0Xb
02A6h	UART7 Special Mode Register 2	U7SMR2	X000 0000b
02A7h	UART7 Special Mode Register	U7SMR	X000 0000b
02A8h	UART7 Transmit/Receive Mode Register	U7MR	00h
02A9h	UART7 Bit Rate Register	U7BRG	XXh
02AAh	UART7 Transmit Buffer Register	U7TB	XXh
02ABh			XXh
02ACh	UART7 Transmit/Receive Control Register 0	U7C0	0000 1000b
02ADh	UART7 Transmit/Receive Control Register 1	U7C1	0000 0010b
02AEh	UART7 Receive Buffer Register	U7RB	XXh
02AFh			XXh
02B0h	I2C0 Data Shift Register	S00	XXh
02B1h			
02B2h	I2C0 Address Register 0	S0D0	0000 000Xb
02B3h	I2C0 Control Register 0	S1D0	00h
02B4h	I2C0 Clock Control Register	S20	00h
02B5h	I2C0 Start/Stop Condition Control Register	S2D0	0001 1010b
02B6h	I2C0 Control Register 1	S3D0	0011 0000b
02B7h	I2C0 Control Register 2	S4D0	00h
02B8h	I2C0 Status Register 0	S10	0001 000Xb
02B9h	I2C0 Status Register 1	S11	XXXX X000b
02BAh	I2C0 Address Register 1	S0D1	0000 000Xb
02BBh	I2C0 Address Register 2	S0D2	0000 000Xb
02BCh			
02BDh			
02BEh			
02BFh			
02C0h to 02FFh			

X: Undefined

Note:
1. The blank areas are reserved. No access is allowed.

Downloaded from Arrow.com.

Table 4.12 SFR Information (12) (1)

Address	Register	Symbol	Reset Value
0300h	Timer B3/B4/B5 Count Start Flag	TBSR	000X XXXXb
0301h			
0302h	Timer A1-1 Register	TA11	XXh
0303h			XXh
0304h	Timer A2-1 Register	TA21	XXh
0305h			XXh
0306h	Timer A4-1 Register	TA41	XXh
0307h			XXh
0308h	Three-Phase PWM Control Register 0	INVC0	00h
0309h	Three-Phase PWM Control Register 1	INVC1	00h
030Ah	Three-Phase Output Buffer Register 0	IDB0	XX11 1111b
030Bh	Three-Phase Output Buffer Register 1	IDB1	XX11 1111b
030Ch	Dead Time Timer	DTT	XXh
030Dh	Timer B2 Interrupt Generation Frequency Set Counter	ICTB2	XXh
030Eh	Position-Data-Retain Function Control Register	PDRF	XXXX 0000b
030Fh			
0310h	Timer B3 Register	TB3	XXh
0311h			XXh
0312h	Timer B4 Register	TB4	XXh
0313h			XXh
0314h	Timer B5 Register	TB5	XXh
0315h			XXh
0316h			
0317h			
0318h	Port Function Control Register	PFCR	0011 1111b
0319h			
031Ah			
031Bh	Timer B3 Mode Register	TB3MR	00XX 0000b
031Ch	Timer B4 Mode Register	TB4MR	00XX 0000b
031Dh	Timer B5 Mode Register	TB5MR	00XX 0000b
031Eh			
031Fh			
0320h	Count Start Flag	TABSR	00h
0321h			
0322h	One-Shot Start Flag	ONSF	00h
0323h	Trigger Select Register	TRGSR	00h
0324h	Increment/Decrement Flag	UDF	00h
0325h			
0326h	Timer A0 Register	TA0	XXh
0327h			XXh
0328h	Timer A1 Register	TA1	XXh
0329h			XXh
032Ah	Timer A2 Register	TA2	XXh
032Bh			XXh
032Ch	Timer A3 Register	TA3	XXh
032Dh			XXh
032Eh	Timer A4 Register	TA4	XXh
032Fh			XXh

X: Undefined

Note:
1. The blank areas are reserved. No access is allowed.

Downloaded from Arrow.com.

Table 4.13 SFR Information (13) (1)

Address	Register	Symbol	Reset Value
0330h	Timer B0 Register	TB0	XXh
0331h			XXh
0332h	Timer B1 Register	TB1	XXh
0333h			XXh
0334h	Timer B2 Register	TB2	XXh
0335h			XXh
0336h	Timer A0 Mode Register	TA0MR	00h
0337h	Timer A1 Mode Register	TA1MR	00h
0338h	Timer A2 Mode Register	TA2MR	00h
0339h	Timer A3 Mode Register	TA3MR	00h
033Ah	Timer A4 Mode Register	TA4MR	00h
033Bh	Timer B0 Mode Register	TB0MR	00XX 0000b
033Ch	Timer B1 Mode Register	TB1MR	00XX 0000b
033Dh	Timer B2 Mode Register	TB2MR	00XX 0000b
033Eh	Timer B2 Special Mode Register	TB2SC	X000 0000b
033Fh			
0340h	Real-Time Clock Second Data Register	RTCSEC	00h
0341h	Real-Time Clock Minute Data Register	RTCMIN	X000 0000b
0342h	Real-Time Clock Hour Data Register	RTCHR	XX00 0000b
0343h	Real-Time Clock Day Data Register	RTCWK	XXXX X000b
0344h	Real-Time Clock Control Register 1	RTCCR1	0000 X00Xb
0345h	Real-Time Clock Control Register 2	RTCCR2	X000 0000b
0346h	Real-Time Clock Count Source Select Register	RTCCSR	XXX0 0000b
0347h			
0348h	Real-Time Clock Second Compare Data Register	RTCCSEC	X000 0000b
0349h	Real-Time Clock Minute Compare Data Register	RTCCMIN	X000 0000b
034Ah	Real-Time Clock Hour Compare Data Register	RTCCHR	X000 0000b
034Bh			
034Ch			
034Dh			
034Eh			
034Fh			
0350h	CEC Function Control Register 1	CECC1	XXXX X000b
0351h	CEC Function Control Register 2	CECC2	00h
0352h	CEC Function Control Register 3	CECC3	XXXX 0000b
0353h	CEC Function Control Register 4	CECC4	00h
0354h	CEC Flag Register	CECFLG	00h
0355h	CEC Interrupt Source Select Register	CISEL	00h
0356h	CEC Transmit Buffer Register 1	CCTB1	00h
0357h	CEC Transmit Buffer Register 2	CCTB2	XXXX XX00b
0358h	CEC Receive Buffer Register 1	CCRB1	00h
0359h	CEC Receive Buffer Register 2	CCRB2	XXXX X000b
035Ah	CEC Receive Follower Address Set Register 1	CRADRI1	00h
035Bh	CEC Receive Follower Address Set Register 2	CRADRI2	00h
035Ch			
035Dh			
035Eh			
035Fh			

X: Undefined

Note:
1. The blank areas are reserved. No access is allowed.

Downloaded from Arrow.com.

Table 4.14 SFR Information (14) (1)

Address	Register	Symbol	Reset Value
0360h	Pull-Up Control Register 0	PUR0	00h
0361h	Pull-Up Control Register 1	PUR1	0000 0000b (2) 0000 0010b
0362h	Pull-Up Control Register 2	PUR2	00h
0363h	Pull-Up Control Register 3	PUR3	00h
0364h			
0365h			
0366h	Port Control Register	PCR	0000 0XX0b
0367h			
0368h			
0369h	NMI/SD Digital Filter Register	NMIDF	XXXX X000b
036Ah			
036Bh			
036Ch			
036Dh			
036Eh			
036Fh			
0370h	PWM Control Register 0	PWMCON0	00h
0371h			
0372h	PWM0 Prescaler	PWMPRE0	00h
0373h	PWM0 Register	PWMREG0	00h
0374h	PWM1 Prescaler	PWMPRE1	00h
0375h	PWM1 Register	PWMREG1	00h
0376h	PWM Control Register 1	PWMCON1	00h
0377h			
0378h			
0379h			
037Ah			
037Bh			
037Ch	Count Source Protection Mode Register	CSPR	00h (3)
037Dh	Watchdog Timer Refresh Register	WDTR	XXh
037Eh	Watchdog Timer Start Register	WDTS	XXh
037Fh	Watchdog Timer Control Register	WDC	00XX XXXXb
0380h to 038Fh			

X: Undefined

Notes:

1. The blank areas are reserved. No access is allowed.
2. Values after hardware reset, power-on reset, or voltage monitor 0 reset are as follows:
   - 00000000b when a low-level signal is input to the CNVSS pin
   - 00000010b when a high-level signal is input to the CNVSS pin

   Values after voltage monitor 1 reset, voltage monitor 2 reset, software reset, watchdog timer reset, or oscillation stop detect reset are as follows:
   - 00000000b when bits PM01 and PM00 in the PM0 register are 00b (single-chip mode).
   - 00000010b when bits PM01 and PM00 in the PM0 register are 01b (memory expansion mode) or 11b (microprocessor mode).
3. When the CSPROINI bit in the OFS1 address is 0, the reset value is 1000 0000b.

Downloaded from Arrow.com.

Table 4.15 SFR Information (15) (1)

Address	Register	Symbol	Reset Value
0390h	DMA2 Source Select Register	DM2SL	00h
0391h			
0392h	DMA3 Source Select Register	DM3SL	00h
0393h			
0394h			
0395h			
0396h			
0397h			
0398h	DMA0 Source Select Register	DM0SL	00h
0399h			
039Ah	DMA1 Source Select Register	DM1SL	00h
039Bh			
039Ch			
039Dh			
039Eh			
039Fh			
03A0h			
03A1h			
03A2h	Open-Circuit Detection Assist Function Register	AINRST	XX00 XXXXb
03A3h			
03A4h			
03A5h			
03A6h			
03A7h			
03A8h			
03A9h			
03AAh			
03ABh			
03ACh			
03ADh			
03AEh			
03AFh			
03B0h			
03B1h			
03B2h			
03B3h			
03B4h	SFR Snoop Address Register	CRCSAR	XXXX XXXXb
03B5h			00XX XXXXb
03B6h	CRC Mode Register	CRCMR	0XXX XXX0b
03B7h			
03B8h			
03B9h			
03BAh			
03BBh			
03BCh	CRC Data Register	CRCD	XXh
03BDh			XXh
03BEh	CRC Input Register	CRCIN	XXh
03BFh			

X: Undefined

Note:
1. The blank areas are reserved. No access is allowed.

Downloaded from Arrow.com.

Table 4.16 SFR Information (16) (1)

Address	Register	Symbol	Reset Value
03C0h	A/D Register 0	AD0	XXXX XXXXb
03C1h			0000 00XXb
03C2h	A/D Register 1	AD1	XXXX XXXXb
03C3h			0000 00XXb
03C4h	A/D Register 2	AD2	XXXX XXXXb
03C5h			0000 00XXb
03C6h	A/D Register 3	AD3	XXXX XXXXb
03C7h			0000 00XXb
03C8h	A/D Register 4	AD4	XXXX XXXXb
03C9h			0000 00XXb
03CAh	A/D Register 5	AD5	XXXX XXXXb
03CBh			0000 00XXb
03CCh	A/D Register 6	AD6	XXXX XXXXb
03CDh			0000 00XXb
03CEh	A/D Register 7	AD7	XXXX XXXXb
03CFh			0000 00XXb
03D0h			
03D1h			
03D2h			
03D3h			
03D4h	A/D Control Register 2	ADCON2	0000 X00Xb
03D5h			
03D6h	A/D Control Register 0	ADCON0	0000 0XXXb
03D7h	A/D Control Register 1	ADCON1	0000 X000b
03D8h	D/A0 Register	DA0	00h
03D9h			
03DAh	D/A1 Register	DA1	00h
03DBh			
03DCh	D/A Control Register	DACON	00h
03DDh			
03DEh			
03DFh			
03E0h	Port P0 Register	P0	XXh
03E1h	Port P1 Register	P1	XXh
03E2h	Port P0 Direction Register	PD0	00h
03E3h	Port P1 Direction Register	PD1	00h
03E4h	Port P2 Register	P2	XXh
03E5h	Port P3 Register	P3	XXh
03E6h	Port P2 Direction Register	PD2	00h
03E7h	Port P3 Direction Register	PD3	00h
03E8h	Port P4 Register	P4	XXh
03E9h	Port P5 Register	P5	XXh
03EAh	Port P4 Direction Register	PD4	00h
03EBh	Port P5 Direction Register	PD5	00h
03ECh	Port P6 Register	P6	XXh
03EDh	Port P7 Register	P7	XXh
03EEh	Port P6 Direction Register	PD6	00h
03EFh	Port P7 Direction Register	PD7	00h

X: Undefined

Note:
1. The blank areas are reserved. No access is allowed.

Downloaded from Arrow.com.

Table 4.17 SFR Information (17) (1)

Address	Register	Symbol	Reset Value
03F0h	Port P8 Register	P8	XXh
03F1h	Port P9 Register	P9	XXh
03F2h	Port P8 Direction Register	PD8	00h
03F3h	Port P9 Direction Register	PD9	00h
03F4h	Port P10 Register	P10	XXh
03F5h	Port P11 Register	P11	XXh
03F6h	Port P10 Direction Register	PD10	00h
03F7h	Port P11 Direction Register	PD11	00h
03F8h	Port P12 Register	P12	XXh
03F9h	Port P13 Register	P13	XXh
03FAh	Port P12 Direction Register	PD12	00h
03FBh	Port P13 Direction Register	PD13	00h
03FCh	Port P14 Register	P14	XXh
03FDh			
03FEh	Port P14 Direction Register	PD14	XXXX XX00b
03FFh			

X: Undefined

Note:
1. The blank areas are reserved. No access is allowed.

Downloaded from Arrow.com.

Table 4.18 SFR Information (18) (1)

Address	Register	Symbol	Reset Value
D080h	PMC0 Header Pattern Set Register (Min)	PMC0HDPMIN	0000 0000b
D081h			XXXX X000b
D082h	PMC0 Header Pattern Set Register (Max)	PMC0HDPMAX	0000 0000b
D083h			XXXX X000b
D084h	PMC0 Data 0 Pattern Set Register (Min)	PMC0D0PMIN	00h
D085h	PMC0 Data 0 Pattern Set Register (Max)	PMC0D0PMAX	00h
D086h	PMC0 Data 1 Pattern Set Register (Min)	PMC0D1PMIN	00h
D087h	PMC0 Data 1 Pattern Set Register (Max)	PMC0D1PMAX	00h
D088h	PMC0 Measurements Register	PMC0TIM	00h
D089h			00h
D08Ah			
D08Bh			
D08Ch	PMC0 Receive Data Store Register 0	PMC0DAT0	00h
D08Dh	PMC0 Receive Data Store Register 1	PMC0DAT1	00h
D08Eh	PMC0 Receive Data Store Register 2	PMC0DAT2	00h
D08Fh	PMC0 Receive Data Store Register 3	PMC0DAT3	00h
D090h	PMC0 Receive Data Store Register 4	PMC0DAT4	00h
D091h	PMC0 Receive Data Store Register 5	PMC0DAT5	00h
D092h	PMC0 Receive Bit Count Register	PMC0RBIT	XX00 0000b
D093h			
D094h	PMC1 Header Pattern Set Register (Min)	PMC1HDPMIN	0000 0000b
D095h			XXXX X000b
D096h	PMC1 Header Pattern Set Register (Max)	PMC1HDPMAX	0000 0000b
D097h			XXXX X000b
D098h	PMC1 Data 0 Pattern Set Register (Min)	PMC1D0PMIN	00h
D099h	PMC1 Data 0 Pattern Set Register (Max)	PMC1D0PMAX	00h
D09Ah	PMC1 Data 1 Pattern Set Register (Min)	PMC1D1PMIN	00h
D09Bh	PMC1 Data 1 Pattern Set Register (Max)	PMC1D1PMAX	00h
D09Ch	PMC1 Measurements Register	PMC1TIM	00h
D09Dh			00h
D09Eh			
D09Fh			

X: Undefined

Note:
1. The blank areas are reserved. No access is allowed.

Downloaded from Arrow.com.

4.2 Notes on SFRs

4.2.1 Register Settings

Table 4.19 lists Registers with Write-Only Bits and registers whose function differs between reading and writing. Set these registers with immediate values. Do not use read-modify-write instructions. When establishing the next value by altering the existing value, write the existing value to the RAM as well as to the register. Transfer the next value to the register after making changes in the RAM.
Read-modify-write instructions can be used when writing to the no register bits.

Table 4.19 Registers with Write-Only Bits

Address	Register	Symbol
0249h	UART0 Bit Rate Register	U0BRG
024Bh to 024Ah	UART0 Transmit Buffer Register	U0TB
0259h	UART1 Bit Rate Register	U1BRG
025Bh to 025Ah	UART1 Transmit Buffer Register	U1TB
0269h	UART2 Bit Rate Register	U2BRG
026Bh to 026Ah	UART2 Transmit Buffer Register	U2TB
0273h	SI/O3 Bit Rate Register	S3BRG
0277h	SI/O4 Bit Rate Register	S4BRG
0289h	UART5 Bit Rate Register	U5BRG
028Bh to 028Ah	UART5 Transmit Buffer Register	U5TB
0299h	UART6 Bit Rate Register	U6BRG
029Bh to 029Ah	UART6 Transmit Buffer Register	U6TB
02A9h	UART7 Bit Rate Register	U7BRG
02ABh to 02AAh	UART7 Transmit Buffer Register	U7TB
02B6h	I2C0 Control Register 1	S3D0
02B8h	I2C0 Status Register 0	S10
0303h to 0302h	Timer A1-1 Register	TA11
0305h to 0304h	Timer A2-1 Register	TA21
0307h to 0306h	Timer A4-1 Register	TA41
030Ah	Three-Phase Output Buffer Register 0	IDB0
030Bh	Three-Phase Output Buffer Register 1	IDB1
030Ch	Dead Time Timer	DTT
030Dh	Timer B2 Interrupt Generation Frequency Set Counter	ICTB2
0327h to 0326h	Timer A0 Register	TA0
0329h to 0328h	Timer A1 Register	TA1
032Bh to 032Ah	Timer A2 Register	TA2
032Dh to 032Ch	Timer A3 Register	TA3
032Fh to 032Eh	Timer A4 Register	TA4
037Dh	Watchdog Timer Refresh Register	WDTR
037Eh	Watchdog Timer Start Register	WDTS

Downloaded from Arrow.com.

Table 4.20 Read-Modify-Write Instructions

Function	Mnemonic
Transfer	MOV*Dir*
Bit processing	BCLR, BM*Cnd*, BNOT, BSET, BTSTC, and BTSTS
Shifting	ROLC, RORC, ROT, SHA, and SHL
Arithmetic operation	ABS, ADC, ADCF, ADD, DEC, DIV, DIVU, DIVX, EXTS, INC, MUL, MULU, NEG, SBB, and SUB
Decimal operation	DADC, DADD, DSBB, and DSUB
Logical operation	AND, NOT, OR, and XOR
Jump	ADJNZ, SBJNZ

Downloaded from Arrow.com.

5. Electrical Characteristics

5.1 Electrical Characteristics (Common to 3 V and 5 V)

5.1.1 Absolute Maximum Rating

Table 5.1 Absolute Maximum Ratings

Symbol	Parameter		Condition	Rated Value	Unit
V_{CC1}	Supply voltage		$V_{CC1} = AV_{CC}$	–0.3 to 6.5	V
V_{CC2}	Supply voltage		$V_{CC1} = AV_{CC}$	–0.3 to V_{CC1} + 0.1 (1)	V
AV_{CC}	Analog supply voltage		$V_{CC1} = AV_{CC}$	–0.3 to 6.5	V
V_{REF}	Analog reference voltage		$V_{CC1} = AV_{CC}$	–0.3 to V_{CC1} + 0.1 (1)	V
V_I	Input voltage	$\overline{RESET}$, CNVSS, BYTE, P6_0 to P6_7, P7_2 to P7_7, P8_0 to P8_4, P8_6, P8_7, P9_0 to P9_7, P10_0 to P10_7, P11_0 to P11_7, P14_0, P14_1 XIN		–0.3 to V_{CC1} + 0.3 (1)	V
		P0_0 to P0_7, P1_0 to P1_7, P2_0 to P2_7, P3_0 to P3_7, P4_0 to P4_7, P5_0 to P5_7, P12_0 to P12_7, P13_0 to P13_7		–0.3 to V_{CC2} + 0.3 (1)	V
		P7_0, P7_1, P8_5		–0.3 to 6.5	V
V_O	Output voltage	P6_0 to P6_7, P7_2 to P7_7, P8_0 to P8_4, P8_6, P8_7, P9_0 to P9_7, P10_0 to P10_7, P11_0 to P11_7, P14_0, P14_1 XOUT		–0.3 to V_{CC1} + 0.3 (1)	V
		P0_0 to P0_7, P1_0 to P1_7, P2_0 to P2_7, P3_0 to P3_7, P4_0 to P4_7, P5_0 to P5_7, P12_0 to P12_7, P13_0 to P13_7		–0.3 to V_{CC2} + 0.3 (1)	V
		P7_0, P7_1, P8_5		–0.3 to 6.5	V
P_d	Power consumption		–40°C < T_{opr} ≤ 85°C	300	mW
T_{opr}	Operating temperature	When the MCU is operating		–20 to 85/–40 to 85	°C
		Flash program erase	Program area	0 to 60	
			Data area	–20 to 85/–40 to 85	
T_{stg}	Storage temperature			–65 to 150	°C

Note:
1. Maximum value is 6.5 V.

Downloaded from Arrow.com.

5.1.2 Recommended Operating Conditions

Table 5.2 Recommended Operating Conditions (1/3)

$V_{CC1} = V_{CC2}$ = 2.7 to 5.5 V at T_{opr} = -20°C to 85°C/-40°C to 85°C unless otherwise specified.

Symbol	Parameter			Standard			Unit
				Min.	Typ.	Max.	
V_{CC1}, V_{CC2}	Supply voltage ($V_{CC1} \geq V_{CC2}$)		CEC function is not used	2.7	5.0	5.5	V
			CEC function is used	2.7		3.63	V
AV_{CC}	Analog supply voltage				V_{CC1}		V
V_{SS}	Supply voltage				0		V
AV_{SS}	Analog supply voltage				0		V
V_{IH}	High input voltage	P3_1 to P3_7, P4_0 to P4_7, P5_0 to P5_7, P12_0 to P12_7, P13_0 to P13_7		$0.8V_{CC2}$		V_{CC2}	V
		P0_0 to P0_7, P1_0 to P1_7, P2_0 to P2_7, P3_0 (in single-chip mode)		$0.8V_{CC2}$		V_{CC2}	V
		P0_0 to P0_7, P1_0 to P1_7, P2_0 to P2_7, P3_0 (data input in memory expansion and microprocessor modes)		$0.5V_{CC2}$		V_{CC2}	V
		P6_0 to P6_7, P7_2 to P7_7, P8_0 to P8_4, P8_6, P8_7, P9_0 to P9_7, P10_0 to P10_7, P11_0 to P11_7, P14_0, P14_1 XIN, $\overline{RESET}$, CNVSS, BYTE		$0.8V_{CC1}$		V_{CC1}	V
		P7_0, P7_1, P8_5		$0.8V_{CC1}$		6.5	V
		CEC		$0.7V_{CC1}$			V
V_{IL}	Low input voltage	P3_1 to P3_7, P4_0 to P4_7, P5_0 to P5_7, P12_0 to P12_7, P13_0 to P13_7		0		$0.2V_{CC2}$	V
		P0_0 to P0_7, P1_0 to P1_7, P2_0 to P2_7, P3_0 (in single-chip mode)		0		$0.2V_{CC2}$	V
		P0_0 to P0_7, P1_0 to P1_7, P2_0 to P2_7, P3_0 (data input in memory expansion and microprocessor mode)		0		$0.16V_{CC2}$	V
		P6_0 to P6_7, P7_0 to P7_7, P8_0 to P8_7, P9_0 to P9_7, P10_0 to P10_7,P11_0 to P11_7, P14_0, P14_1 XIN, $\overline{RESET}$, CNVSS, BYTE		0		$0.2V_{CC1}$	V
		CEC				$0.26V_{CC1}$	V
$I_{OH(sum)}$	High peak output current	Sum of $I_{OH(peak)}$ at P0_0 to P0_7, P1_0 to P1_7, P2_0 to P2_7				-40.0	mA
		Sum of $I_{OH(peak)}$ at P3_0 to P3_7, P4_0 to P4_7, P5_0 to P5_7, P12_0 to P12_7, and P13_0 to P13_7				-40.0	mA
		Sum of $I_{OH(peak)}$ at P6_0 to P6_7, P7_2 to P7_7, P8_0 to P8_4				-40.0	mA
		Sum of $I_{OH(peak)}$ at P8_6, P8_7, P9_0 to P9_7, P10_0 to P10_7, P11_0 to P11_7, P14_0 to P14_1				-40.0	mA
$I_{OH(peak)}$	High peak output current	P0_0 to P0_7, P1_0 to P1_7, P2_0 to P2_7, P3_0 to P3_7, P4_0 to P4_7, P5_0 to P5_7, P6_0 to P6_7, P7_2 to P7_7, P8_0 to P8_4, P8_6, P8_7, P9_0 to P9_7, P10_0 to P10_7, P11_0 to P11_7, P12_0 to P12_7, P13_0 to P13_7, P14_0, P14_1				–10.0	mA
$I_{OH(avg)}$	High average output current (1)	P0_0 to P0_7, P1_0 to P1_7, P2_0 to P2_7, P3_0 to P3_7, P4_0 to P4_7, P5_0 to P5_7, P6_0 to P6_7, P7_2 to P7_7, P8_0 to P8_4, P8_6, P8_7, P9_0 to P9_7, P10_0 to P10_7, P11_0 to P11_7, P12_0 to P12_7, P13_0 to P13_7, P14_0, P14_1				–5.0	mA

Note:
1. The average output current is the mean value within 100 ms.

Downloaded from Arrow.com.

Table 5.3 Recommended Operating Conditions (2/3)

V_{CC1} = V_{CC2} = 2.7 to 5.5 V at T_{opr} = -20°C to 85°C/-40°C to 85°C unless otherwise specified.

Symbol	Parameter			Standard			Unit
				Min.	Typ.	Max.	
$I_{OL(sum)}$	Low peak output current	Sum of $I_{OL(peak)}$ at P0_0 to P0_7, P1_0 to P1_7, P2_0 to P2_7, P8_6, P8_7, P9_0 to P9_7, P10_0 to P10_7, P11_0 to P11_7, P14_0 to P14_1				80.0	mA
		Sum of $I_{OL(peak)}$ at P3_0 to P3_7, P4_0 to P4_7, P5_0 to P5_7, P6_0 to P6_7, P7_0 to P7_7, P8_0 to P8_5, P12_0 to P12_7, P13_0 to P13_7				80.0	mA
$I_{OL(peak)}$	Low peak output current	P0_0 to P0_7, P1_0 to P1_7, P2_0 to P2_7, P3_0 to P3_7, P4_0 to P4_7, P5_0 to P5_7, P6_0 to P6_7, P7_0 to P7_7, P8_0 to P8_7, P9_0 to P9_7, P10_0 to P10_7, P11_0 to P11_7, P12_0 to P12_7, P13_0 to P13_7, P14_0, P14_1				10.0	mA
$I_{OL(avg)}$	Low average output current (1)	P0_0 to P0_7, P1_0 to P1_7, P2_0 to P2_7, P3_0 to P3_7, P4_0 to P4_7, P5_0 to P5_7, P6_0 to P6_7, P7_0 to P7_7, P8_0 to P8_7, P9_0 to P9_7, P10_0 to P10_7, P11_0 to P11_7, P12_0 to P12_7, P13_0 to P13_7, P14_0, P14_1				5.0	mA
$f_{(XIN)}$	Main clock input oscillation frequency		V_{CC1} = 2.7 V to 5.5 V	2		20	MHz
$f_{(XCIN)}$	Sub clock oscillation frequency				32.768	50	kHz
$f_{(PLL)}$	PLL clock oscillation frequency		V_{CC1} = 2.7 V to 5.5 V	10		32	MHz
$f_{(BCLK)}$	CPU operation clock			2		32	MHz
$t_{SU(PLL)}$	PLL frequency synthesizer stabilization wait time		V_{CC1} = 5.0 V			2	ms
			V_{CC1} = 3.0 V			3	ms

Note:

1. The average output current is the mean value within 100 ms.

Downloaded from Arrow.com.

Table 5.4 Recommended Operating Conditions (3/3) (1)

V_{CC1} = 2.7 to 5.5 V, V_{SS} = 0 V, and T_{opr} = -20°C to 85°C/-40°C to 85°C unless otherwise specified.
The ripple voltage must not exceed $V_{r(VCC1)}$ and/or $dV_{r(VCC1)}/dt$.

Symbol	Parameter		Standard			Unit
			Min.	Typ.	Max.	
$V_{r(VCC1)}$	Allowable ripple voltage	V_{CC1} = 5.0 V			0.5	Vp-p
		V_{CC1} = 3.0 V			0.3	Vp-p
$dV_{r(VCC1)}/dt$	Ripple voltage falling gradient	V_{CC1} = 5.0 V			0.3	V/ms
		V_{CC1} = 3.0 V			0.3	V/ms

Note:
1. The device is operationally guaranteed under these operating conditions.

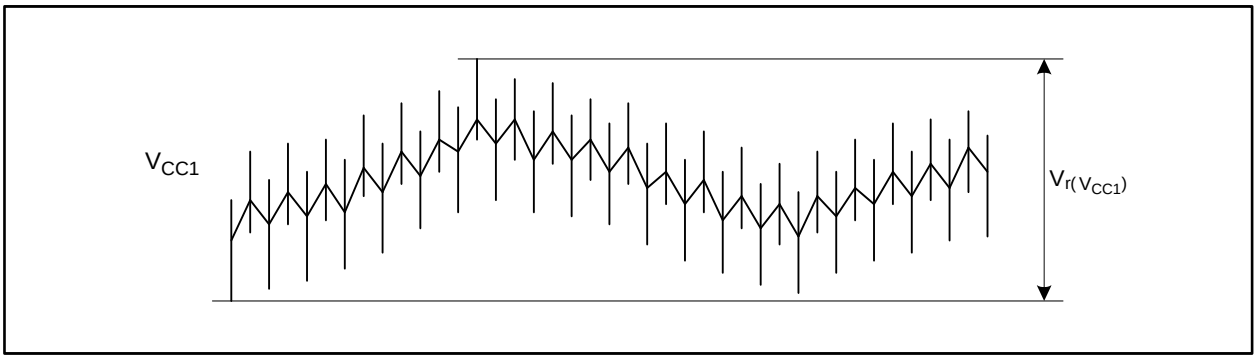

Figure 5.1 Ripple Waveform

Downloaded from Arrow.com.

5.1.3 A/D Conversion Characteristics

Table 5.5 A/D Conversion Characteristics (1/2) (1)

V_{CC1} = AV_{CC} = 3.0 to 5.5 V ≥ V_{CC2} ≥ V_{REF}, V_{SS} = AV_{SS} = 0 V at T_{opr} = -20°C to 85°C/-40°C to 85°C unless otherwise specified.

Symbol	Parameter		Measuring Condition		Standard			Unit
					Min.	Typ.	Max.	
-	Resolution		AV_{CC} = V_{CC1} ≥ V_{CC2} ≥ V_{REF}				10	Bits
I_{NL}	Integral non-linearity error	10 bits	V_{CC1} = 5.0 V	AN0 to AN7 input, AN0_0 to AN0_7 input, AN2_0 to AN2_7 input, ANEX0, ANEX1 input (Note 2)			±3	LSB
			V_{CC1} = 3.3 V	AN0 to AN7 input, AN0_0 to AN0_7 input, AN2_0 to AN2_7 input, ANEX0, ANEX1 input (Note 2)			±3	LSB
			V_{CC1} = 3.0 V	AN0 to AN7 input, AN0_0 to AN0_7 input, AN2_0 to AN2_7 input, ANEX0, ANEX1 input (Note 2)			±3	LSB
-	Absolute accuracy	10 bits	V_{CC1} = 5.0 V	AN0 to AN7 input, AN0_0 to AN0_7 input, AN2_0 to AN2_7 input, ANEX0, ANEX1 input (Note 2)			±3	LSB
			V_{CC1} = 3.3 V	AN0 to AN7 input, AN0_0 to AN0_7 input, AN2_0 to AN2_7 input, ANEX0, ANEX1 input (Note 2)			±3	LSB
			V_{CC1} = 3.0 V	AN0 to AN7 input, AN0_0 to AN0_7 input, AN2_0 to AN2_7 input, ANEX0, ANEX1 input (Note 2)			±3	LSB

Notes:
1. Use when AV_{CC} = V_{CC1}.
2. Flash memory rewrite disabled. Except for the analog input pin, set the pins to be measured as input ports and connect them to V_{SS}. See Figure 5.2 “A/D Accuracy Measure Circuit”.

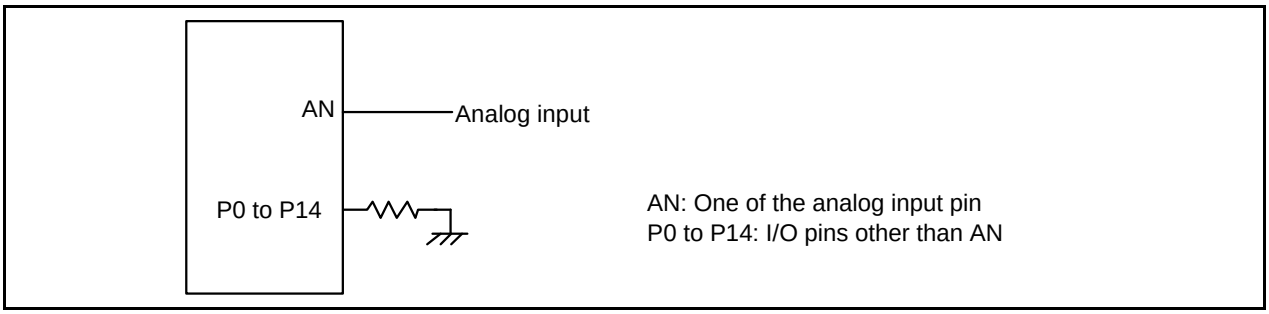

Figure 5.2 A/D Accuracy Measure Circuit

Downloaded from Arrow.com.

Table 5.6 A/D Conversion Characteristics (2/2) (1)

$V_{CC1} = AV_{CC} = 3.0$ to $5.5\ V \geq V_{CC2} \geq V_{REF}$, $V_{SS} = AV_{SS} = 0\ V$ at T_{opr} = -20°C to 85°C/-40°C to 85°C unless otherwise specified.

Symbol	Parameter		Measuring Condition	Standard			Unit
				Min.	Typ.	Max.	
ϕAD	A/D operating clock frequency	AN0 to AN7 input, ANEX0 to ANEX1 input	$4.0\ V \leq V_{CC1} \leq 5.5\ V$	2		25	MHz
			$3.2\ V \leq V_{CC1} \leq 4.0\ V$	2		16	MHz
			$3.0\ V \leq V_{CC1} \leq 3.2\ V$	2		10	MHz
		AN0_0 to AN0_7 input, AN2_0 to AN2_7 input	$4.0\ V \leq V_{CC2} \leq 5.5\ V$	2		25	MHz
			$3.2\ V \leq V_{CC2} \leq 4.0\ V$	2		16	MHz
			$3.0\ V \leq V_{CC2} \leq 3.2\ V$	2		10	MHz
-	Tolerance level impedance				3		kΩ
D_{NL}	Differential non-linearity error		(4)			±1	LSB
-	Offset error		(4)			±3	LSB
-	Gain error		(4)			±3	LSB
t_{CONV}	10-bit conversion time		V_{CC1} = 5 V, ϕAD = 25 MHz	1.60			μs
t_{SAMP}	Sampling time			0.60			μs
V_{REF}	Reference voltage			3.0		V_{CC1}	V
V_{IA}	Analog input voltage (2), (3)			0		V_{REF}	V

Notes:
1. Use when $AV_{CC} = V_{CC1}$.
2. When $V_{CC1} \geq V_{CC2}$, set as below:
   Analog input voltage (AN0 to AN7, ANEX0, and ANEX1) $\leq V_{CC1}$
   Analog input voltage (AN0_0 to AN0_7 and AN2_0 to AN2_7) $\leq V_{CC2}$.
3. When analog input voltage is over reference voltage, the result of A/D conversion is 3FFh.
4. Flash memory rewrite disabled. Except for the analog input pin, set the pins to be measured as input ports and connect them to V_{SS}. See Figure 5.2 “A/D Accuracy Measure Circuit”.

5.1.4 D/A Conversion Characteristics

Table 5.7 D/A Conversion Characteristics

$V_{CC1} = AV_{CC} = V_{REF} = 3.0$ to 5.5 V, $V_{SS} = AV_{SS} = 0$ V at T_{opr} = -20°C to 85°C/-40°C to 85°C unless otherwise specified.

Symbol	Parameter	Measuring Condition	Standard			Unit
			Min.	Typ.	Max.	
-	Resolution				8	Bits
-	Absolute Accuracy				2.5	LSB
t_{SU}	Setup Time				3	μs
R_O	Output Resistance		5	6	8.2	kΩ
I_{VREF}	Reference Power Supply Input Current	See Notes 1 and 2			1.5	mA

Notes:
1. This applies when using one D/A converter, with the D/A register for the unused D/A converter set to 00h.
2. The current consumption of the A/D converter is not included. Also, the I_{VREF} of the D/A converter will flow even if the ADSTBY bit in the ADCON1 register is 0 (A/D operation stopped (standby)).

Downloaded from Arrow.com.

5.1.5 Flash Memory Electrical Characteristics

Table 5.8 CPU Clock When Operating Flash Memory ($f_{(BCLK)}$)

V_{CC1} = 2.7 to 5.5 V, T_{opr} = -20°C to 85°C/-40°C to 85°C unless otherwise specified.

Symbol	Parameter	Conditions	Standard			Unit
			Min.	Typ.	Max.	
-	CPU rewrite mode				10 (1)	MHz
f(SLOW_R)	Slow read mode				5 (3)	MHz
-	Low current consumption read mode			fC(32.768)	35	kHz
-	Data flash read	2.7 V ≤ V_{CC1} ≤ 3.0 V			16 (2)	MHz
		3.0 V < V_{CC1} ≤ 5.5 V			20 (2)	MHz

Notes:
1. Set the PM17 bit in the PM1 register to 1 (one wait).
2. When the frequency is over this value, set the FMR17 bit in the FMR1 register to 0 (one wait) or the PM17 bit in the PM1 register to 1 (one wait)
3. Set the PM17 bit in the PM1 register to 1 (one wait). When using 125 kHz on-chip oscillator clock or sub clock as the CPU clock source, a wait is not necessary.

Table 5.9 Flash Memory (Program ROM 1, 2) Electrical Characteristics

V_{CC1} = 2.7 to 5.5 V at T_{opr} = 0°C to 60°C (option: -40°C to 85°C), unless otherwise specified.

Symbol	Parameter	Conditions	Standard			Unit
			Min.	Typ.	Max.	
-	Program and erase cycles (1), (3), (4)	V_{CC1} = 3.3 V, T_{opr} = 25°C	1,000 (2)			times
-	2 word program time	V_{CC1} = 3.3 V, T_{opr} = 25°C		150	4000	µs
-	Lock bit program time	V_{CC1} = 3.3 V, T_{opr} = 25°C		70	3000	µs
-	Block erase time	V_{CC1} = 3.3 V, T_{opr} = 25°C		0.2	3.0	s
-	Program, erase voltage		2.7		5.5	V
-	Read voltage	T_{opr}= -20°C to 85°C/-40°C to 85°C	2.7		5.5	V
-	Program, erase temperature		0		60	°C
t_{PS}	Flash memory circuit stabilization wait time				50	µs
-	Data hold time (6)	Ambient temperature = 55°C	20			year

Notes:
1. Definition of program and erase cycles:
   The program and erase cycles refer to the number of per-block erasures. If the program and erase cycles are n (n = 1,000), each block can be erased n times. For example, if a block is erased after writing 2 word data 16,384 times, each to a different address, this counts as one program and erase cycles. Data cannot be written to the same address more than once without erasing the block (rewrite prohibited).
2. Cycles to guarantee all electrical characteristics after program and erase. (1 to Min. value can be guaranteed).
3. In a system that executes multiple programming operations, the actual erasure count can be reduced by writing to sequential addresses in turn so that as much of the block as possible is used up before performing an erase operation. It is advisable to retain data on the erasure cycles of each block and limit the number of erase operations to a certain number.
4. If an error occurs during block erase, attempt to execute the clear status register command, then execute the block erase command at least three times until the erase error does not occur.
5. Customers desiring program/erase failure rate information should contact a Renesas Electronics sales office.
6. The data hold time includes time that the power supply is off or the clock is not supplied.

Downloaded from Arrow.com.

Table 5.10 Flash Memory (Data Flash) Electrical Characteristics

V_{CC1} = 2.7 to 5.5 V at T_{opr} = -20 to 85°C/-40 to 85°C, unless otherwise specified.

Symbol	Parameter	Conditions	Standard			Unit
			Min.	Typ.	Max.	
-	Program and erase cycles (1), (3), (4)	V_{CC1} = 3.3 V, T_{opr} = 25°C	10,000 (2)			times
-	2 word program time	V_{CC1} = 3.3 V, T_{opr} = 25°C		300	4000	µs
-	Lock bit program time	V_{CC1} = 3.3 V, T_{opr} = 25°C		140	3000	µs
-	Block erase time	V_{CC1} = 3.3 V, T_{opr} = 25°C		0.2	3.0	s
-	Program, erase voltage		2.7		5.5	V
-	Read voltage		2.7		5.5	V
-	Program, erase temperature		–20/–40		85	°C
t_{PS}	Flash memory circuit stabilization wait time				50	µs
-	Data hold time (6)	Ambient temperature = 55°C	20			year

Notes:

1. Definition of program and erase cycles
   The program and erase cycles refer to the number of per-block erasures.
   If the program and erase cycles are n (n = 10,000), each block can be erased n times.
   For example, if a 4 KB block is erased after writing 2 word data 1,024 times, each to a different address, this counts as one program and erase cycles. Data cannot be written to the same address more than once without erasing the block (rewrite prohibited).
2. Cycles to guarantee all electrical characteristics after program and erase. (1 to Min. value can be guaranteed).
3. In a system that executes multiple programming operations, the actual erasure count can be reduced by writing to sequential addresses in turn so that as much of the block as possible is used up before performing an erase operation. For example, when programming groups of 16 bytes, the effective number of rewrites can be minimized by programming up to 256 groups before erasing them all in one operation. In addition, averaging the erasure cycles between blocks A and B can further reduce the actual erasure cycles. It is also advisable to retain data on the erasure cycles of each block and limit the number of erase operations to a certain number.
4. If an error occurs during block erase, attempt to execute the clear status register command, then execute the block erase command at least three times until the erase error does not occur.
5. Customers desiring program/erase failure rate information should contact a Renesas Electronics sales office.
6. The data hold time includes time that the power supply is off or the clock is not supplied.

Downloaded from Arrow.com.

5.1.6 Voltage Detector and Power Supply Circuit Electrical Characteristics

Table 5.11 Voltage Detector 0 Electrical Characteristics

The measurement condition is V_{CC1} = 2.7 to 5.5 V, T_{opr} = -20°C to 85°C/-40°C to 85°C, unless otherwise specified.

Symbol	Parameter	Condition	Standard			Unit
			Min.	Typ.	Max.	
V_{det0}	Voltage detection level Vdet0_0 (1)	When V_{CC1} is falling.	1.60	1.90	2.20	V
	Voltage detection level Vdet0_2 (1)	When V_{CC1} is falling.	2.55	2.85	3.15	V
-	Voltage detector 0 response time (3)	When V_{CC1} falls from 5 V to (Vdet0_0 - 0.1) V			200	µs
-	Voltage detector self power consumption	VC25 = 1, V_{CC1} = 5.0 V		1.8		µA
$t_{d(E-A)}$	Waiting time until voltage detector operation starts (2)				100	µs

Notes:
1. Select the voltage detection level with the VDSEL1 bit in the OFS1 address.
2. Necessary time until the voltage detector operates when setting to 1 again after setting the VC25 bit in the VCR2 register to 0.
3. Time from when passing the V_{det0} until when a voltage monitor 0 reset is generated.

Table 5.12 Voltage Detector 1 Electrical Characteristics

The measurement condition is V_{CC1} = 2.7 to 5.5 V, T_{opr} = -20°C to 85°C/-40°C to 85°C, unless otherwise specified.

Symbol	Parameter	Condition	Standard			Unit
			Min.	Typ.	Max.	
V_{det1}	Voltage detection level Vdet1_6 (1)	When V_{CC1} is falling.	2.79	3.09	3.39	V
	Voltage detection level Vdet1_B (1)	When V_{CC1} is falling.	3.54	3.84	4.14	V
	Voltage detection level Vdet1_F (1)	When V_{CC1} is falling.	3.94	4.44	4.94	V
-	Hysteresis width when V_{CC1} of voltage detector 1 is rising			0.15		V
-	Voltage detector 1 response time (3)	When V_{CC1} falls from 5 V to (Vdet1_0 - 0.1) V			200	µs
-	Voltage detector self power consumption	VC26 = 1, V_{CC1} = 5.0 V		1.8		µA
$t_{d(E-A)}$	Waiting time until voltage detector operation starts (2)				100	µs

Notes:
1. Select the voltage detection level with bits VD1S0 to VD1S3 in the VD1LS register.
2. Necessary time until the voltage detector operates when setting to 1 again after setting the VC26 bit in the VCR2 register to 0.
3. Time from when passing the V_{det1} until when a voltage monitor 1 reset is generated.

Downloaded from Arrow.com.

Table 5.13 Voltage Detector 2 Electrical Characteristics

The measurement condition is V_{CC1} = 2.7 to 5.5 V, T_{opr} = -20°C to 85°C/-40°C to 85°C, unless otherwise specified.

Symbol	Parameter	Condition	Standard			Unit
			Min.	Typ.	Max.	
V_{det2}	Voltage detection level Vdet2_0	When V_{CC1} is falling	3.50	4.00	4.50	V
-	Hysteresis width at the rising of V_{CC1} in voltage detector 2			0.15		V
-	Voltage detector 2 response time (2)	When V_{CC1} falls from 5 V to (Vdet2_0 - 0.1) V			200	µs
-	Voltage detector self power consumption	VC27 = 1, V_{CC1} = 5.0 V		1.8		µA
$t_{d(E-A)}$	Waiting time until voltage detector operation starts (1)				100	µs

Notes:
1. Necessary time until the voltage detector operates after setting to 1 again after setting the VC27 bit in the VCR2 register to 0.
2. Time from when passing the V_{det2} until when a voltage monitor 2 reset is generated.

Table 5.14 Power-On Reset Circuit

The measurement condition is V_{CC1} = 2.0 to 5.5 V, T_{opr} = -20°C to 85°C/ -40°C to 85°C, unless otherwise specified.

Symbol	Parameter	Condition	Standard			Unit
			Min.	Typ.	Max.	
V_{por1}	Voltage at which power-on reset enabled (1)				0.1	V
t_{rth}	External power V_{CC1} rise gradient		2.0		50000	mV/ms
$t_{w(por)}$	Time necessary to enable power-on reset		300			ms

Note:
1. To use the power-on reset function, enable voltage monitor 0 reset by setting the LVDAS bit in the OFS1 address to 0. Also, set the VDSEL1 bit to 0 (Vdet0_2).

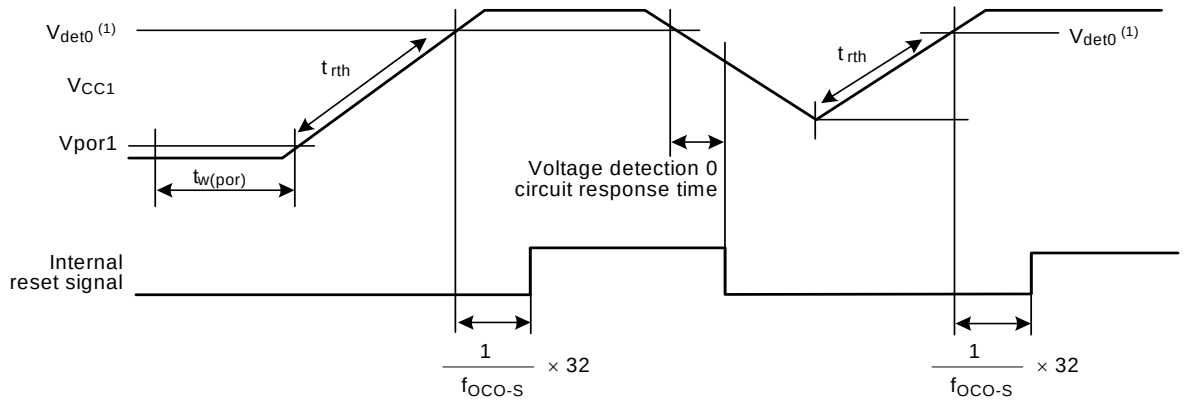

Note:
1. V_{det0} indicates the voltage detection level of the voltage detection 0 circuit.

Figure 5.3 Power-On Reset Circuit Electrical Characteristics

Downloaded from Arrow.com.

Table 5.15 Power Supply Circuit Timing Characteristics

The measurement condition is V_{CC1} = 2.7 to 5.5 V and T_{opr} = 25°C, unless otherwise specified.

Symbol	Parameter	Condition	Standard			Unit
			Min.	Typ.	Max.	
$t_{d(P-R)}$	Internal power supply stability time when power is on (1)				5	ms
$t_{d(R-S)}$	STOP release time				150	μs
$t_{d(W-S)}$	Low power mode wait mode release time				150	μs

Note:
1. Waiting time until the internal power supply generator stabilizes when power is on.

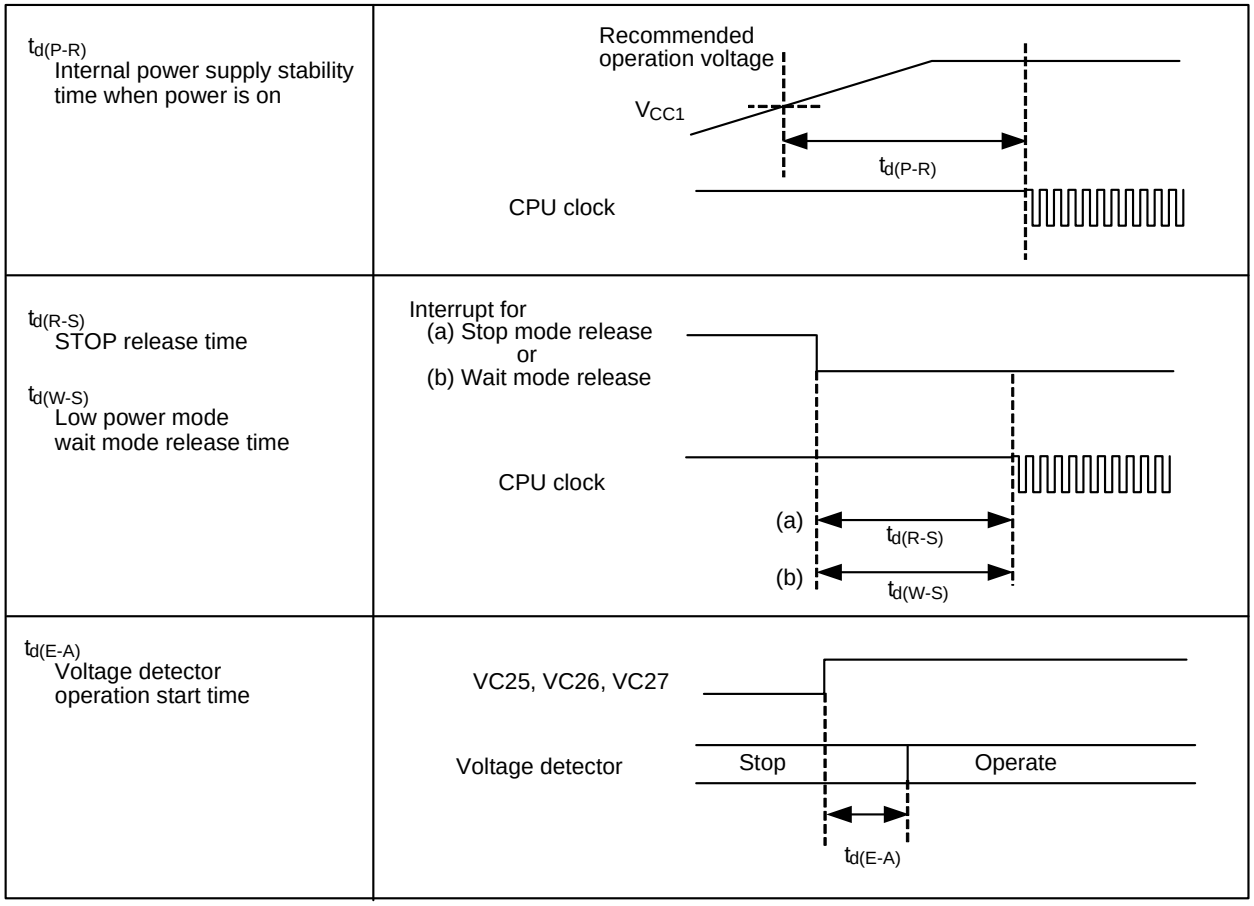

Figure 5.4 Power Supply Circuit Timing Diagram

Downloaded from Arrow.com.

5.1.7 Oscillator Electrical Characteristics

Table 5.16 40 MHz On-Chip Oscillator Electrical Characteristics (1/2)

R5F36506NFA, R5F36506NFB, R5F36506DFA, R5F36506DFB, R5F3651ENFC, R5F3650ENFA, R5F3650ENFB, R5F3651EDFC, R5F3650EDFA, R5F3650EDFB, R5F3651KNFC, R5F3650KNFA, R5F3650KNFB, R5F3651KDFC, R5F3650KDFB, R5F3650KDFA, R5F3651MNFC, R5F3650MNFA, R5F3650MNFB, R5F3651MDFC, R5F3650MDFA, R5F3650MDFB, R5F3651NNFC, R5F3650NNFA, R5F3650NNFB, R5F3651NDFC, R5F3650NDFA, R5F3650NDFB

V_{CC1} = 2.7 to 5.5 V, T_{opr} = -20°C to 85°C/-40°C to 85°C, unless otherwise specified.

Symbol	Parameter	Condition	Standard			Unit
			Min.	Typ.	Max.	
f_{OCO40M}	40 MHz on-chip oscillator frequency	Average frequency in a 10 ms period	36	40	44	MHz
tsu(f_{OCO40M})	Wait time until 40 MHz on-chip oscillator stabilizes				2	ms

Table 5.17 40 MHz On-Chip Oscillator Electrical Characteristics (2/2)

R5F3651RNFC, R5F3650RNFA, R5F3650RNFB, R5F3651RDFC, R5F3650RDFA, R5F3650RDFB, R5F3651TNFC, R5F3650TNFA, R5F3650TNFB, R5F3651TDFC, R5F3650TDFA, R5F3650TDFB

V_{CC1} = 2.7 to 5.5 V, T_{opr} = -20°C to 85°C/-40°C to 85°C, unless otherwise specified.

Symbol	Parameter	Condition	Standard			Unit
			Min.	Typ.	Max.	
f_{OCO40M}	40 MHz on-chip oscillator frequency	Average frequency in a 10 ms period 2.7 V ≤ V_{CC1} < 5.5 V, T_{opr} = 25°C	36	40	44	MHz
		Average frequency in a 10 ms period	1	40	60	MHz
tsu(f_{OCO40M})	Wait time until 40 MHz on-chip oscillator stabilizes				2	ms

Table 5.18 125 kHz On-Chip Oscillator Electrical Characteristics

V_{CC1} = 2.7 to 5.5 V, T_{opr} = –20°C to 85°C/–40°C to 85°C, unless otherwise specified.

Symbol	Parameter	Condition	Standard			Unit
			Min.	Typ.	Max.	
f_{OCO-S}	125 kHz on-chip oscillator frequency	Average frequency in a 10 ms period	100	125	150	kHz
tsu(f_{OCO-S})	Wait time until 125 kHz on-chip oscillator stabilizes				20	μs

Downloaded from Arrow.com.

5.2 Electrical Characteristics (V_{CC1} = V_{CC2} = 5 V)

5.2.1 Electrical Characteristics

V_{CC1} = V_{CC2} = 5 V

Table 5.19 Electrical Characteristics (1) [(1)]

V_{CC1} = V_{CC2} = 4.2 to 5.5 V, V_{SS} = 0 V at T_{opr} = –20°C to 85°C/–40°C to 85°C, $f_{(BCLK)}$ = 32 MHz unless otherwise specified.

Symbol	Parameter			Measuring Condition	Standard			Unit
					Min.	Typ.	Max.	
V_{OH}	High output voltage	P6_0 to P6_7, P7_2 to P7_7, P8_0 to P8_4, P8_6, P8_7, P9_0 to P9_7, P10_0 to P10_7, P11_0 to P11_7, P14_0, P14_1		I_{OH} = –5 mA	V_{CC1} – 2.0		V_{CC1}	V
		P0_0 to P0_7, P1_0 to P1_7, P2_0 to P2_7, P3_0 to P3_7, P4_0 to P4_7, P5_0 to P5_7, P12_0 to P12_7, P13_0 to P13_7		I_{OH} = –5 mA	V_{CC2} – 2.0		V_{CC2}	
V_{OH}	High output voltage	P6_0 to P6_7, P7_2 to P7_7, P8_0 to P8_4, P8_6, P8_7, P9_0 to P9_7, P10_0 to P10_7, P11_0 to P11_7, P14_0, P14_1		I_{OH} = –200 μA	V_{CC1} – 0.3		V_{CC1}	V
		P0_0 to P0_7, P1_0 to P1_7, P2_0 to P2_7, P3_0 to P3_7, P4_0 to P4_7, P5_0 to P5_7, P12_0 to P12_7, P13_0 to P13_7		I_{OH} = –200 μA	V_{CC2} – 0.3		V_{CC2}	
V_{OH}	High output voltage XOUT		HIGH POWER	I_{OH} = –1 mA	V_{CC1} – 2.0		V_{CC1}	V
			LOW POWER	I_{OH} = –0.5 mA	V_{CC1} – 2.0		V_{CC1}	
	High output voltage XCOUT		HIGH POWER	With no load applied		2.6		V
			LOW POWER	With no load applied		2.2		
V_{OL}	Low output voltage	P6_0 to P6_7, P7_0 to P7_7, P8_0 to P8_7, P9_0 to P9_7, P10_0 to P10_7, P11_0 to P11_7, P14_0, P14_1		I_{OL} = 5 mA			2.0	V
		P0_0 to P0_7, P1_0 to P1_7, P2_0 to P2_7, P3_0 to P3_7, P4_0 to P4_7, P5_0 to P5_7, P12_0 to P12_7, P13_0 to P13_7		I_{OL} = 5 mA			2.0	
V_{OL}	Low output voltage	P6_0 to P6_7, P7_0 to P7_7, P8_0 to P8_7, P9_0 to P9_7, P10_0 to P10_7, P11_0 to P11_7, P14_0, P14_1		I_{OL} = 200 μA			0.45	V
		P0_0 to P0_7, P1_0 to P1_7, P2_0 to P2_7, P3_0 to P3_7, P4_0 to P4_7, P5_0 to P5_7, P12_0 to P12_7, P13_0 to P13_7		I_{OL} = 200 μA			0.45	
V_{OL}	Low output voltage XOUT		HIGH POWER	I_{OL} = 1 mA			2.0	V
			LOW POWER	I_{OL} = 0.5 mA			2.0	
	Low output voltage XCOUT		HIGH POWER	With no load applied		0		V
			LOW POWER	With no load applied		0		

Note:
1. When $V_{CC1} \neq V_{CC2}$, refer to 5 V or 3 V standard depending on the voltage.

Downloaded from Arrow.com.

$V_{CC1} = V_{CC2} = 5\ V$

Table 5.20 Electrical Characteristics (2) (1)

$V_{CC1} = V_{CC2} = 4.2$ to 5.5 V, $V_{SS} = 0$ V at $T_{opr} = -20°C$ to 85°C/–40°C to 85°C, $f_{(BCLK)}$ = 32 MHz unless otherwise specified.

Symbol	Parameter		Measuring Condition	Standard			Unit
				Min.	Typ.	Max.	
$V_{T+} - V_{T-}$	Hysteresis	$\overline{HOLD}$, $\overline{RDY}$, TA0IN to TA4IN, TB0IN to TB5IN, $\overline{INT0}$ to $\overline{INT7}$, $\overline{NMI}$, $\overline{ADTRG}$, $\overline{CTS0}$ to $\overline{CTS2}$, $\overline{CTS5}$ to $\overline{CTS7}$, SCL0 to SCL2, SCL5 to SCL7, SDA0 to SDA2, SDA5 to SDA7, CLK0 to CLK7, TA0OUT to TA4OUT, $\overline{KI0}$ to $\overline{KI3}$, RXD0 to RXD2, RXD5 to RXD7, SIN3, SIN4, $\overline{SD}$, PMC0, PMC1, SCLMM, SDAMM, CEC, ZP, IDU, IDV, IDW		0.5		2.0	V
$V_{T+} - V_{T-}$	Hysteresis	$\overline{RESET}$		0.5		2.5	V
I_{IH}	High input current	P0_0 to P0_7, P1_0 to P1_7, P2_0 to P2_7, P3_0 to P3_7, P4_0 to P4_7, P5_0 to P5_7, P6_0 to P6_7, P7_0 to P7_7, P8_0 to P8_7, P9_0 to P9_7, P10_0 to P10_7, P11_0 to P11_7, P12_0 to P12_7, P13_0 to P13_7, P14_0, P14_1 XIN, $\overline{RESET}$, CNVSS, BYTE	V_I = 5 V			5.0	μA
I_{IL}	Low input current	P0_0 to P0_7, P1_0 to P1_7, P2_0 to P2_7, P3_0 to P3_7, P4_0 to P4_7, P5_0 to P5_7, P6_0 to P6_7, P7_0 to P7_7, P8_0 to P8_7, P9_0 to P9_7, P10_0 to P10_7, P11_0 to P11_7, P12_0 to P12_7, P13_0 to P13_7, P14_0, P14_1 XIN, $\overline{RESET}$, CNVSS, BYTE	V_I = 0 V			–5.0	μA
R_{PULLUP}	Pull-up resistance	P0_0 to P0_7, P1_0 to P1_7, P2_0 to P2_7, P3_0 to P3_7, P4_0 to P4_7, P5_0 to P5_7, P6_0 to P6_7, P7_2 to P7_7, P8_0 to P8_4, P8_6, P8_7, P9_0 to P9_7, P10_0 to P10_7, P11_0 to P11_7, P12_0 to P12_7, P13_0 to P13_7, P14_0, P14_1	V_I = 0 V	30	50	100	kΩ
R_{fXIN}	Feedback resistance XIN				1.5		MΩ
V_{RAM}	RAM retention voltage		In stop mode	1.8			V

Note:
1. When $V_{CC1} \neq V_{CC2}$, refer to 5 V or 3 V standard depending on the voltage.

Downloaded from Arrow.com.

$V_{CC1} = V_{CC2} = 5$ V

Table 5.21 Electrical Characteristics (3)

R5F36506NFA, R5F36506NFB, R5F36506DFA, R5F36506DFB, R5F3650ENFA, R5F3650ENFB, R5F3650EDFA, R5F3650EDFB

$V_{CC1} = V_{CC2} = 4.2$ to 5.5 V, $V_{SS} = 0$ V at $T_{opr} = -20°C$ to 85°C/–40°C to 85°C, $f_{(BCLK)} = 32$ MHz unless otherwise specified.

Symbol	Parameter	Measuring Condition		Standard			Unit
				Min.	Typ.	Max.	
R_{fXCIN}	Feedback resistance XCIN				8		MΩ
I_{CC}	Power supply current In single-chip, mode, the output pin are open and other pins are V_{SS}	High-speed mode	$f_{(BCLK)}$ = 32 MHz XIN = 4 MHz (square wave), PLL multiplied by 8 125 kHz on-chip oscillator stopped		24.0		mA
			$f_{(BCLK)}$ =32 MHz, A/D conversion XIN = 4 MHz (square wave), PLL multiplied by 8 125 kHz on-chip oscillator stopped		24.7		mA
			$f_{(BCLK)}$ = 20 MHz XIN = 20 MHz (square wave) 125 kHz on-chip oscillator stopped		16.0		mA
		40 MHz on-chip oscillator mode	Main clock stopped 40 MHz on-chip oscillator on, divide-by-4 ($f_{(BCLK)}$ = 10 MHz) 125 kHz on-chip oscillator stopped		17.0		mA
		125 kHz on-chip oscillator mode	Main clock stopped 40 MHz on-chip oscillator stopped, 125 kHz on-chip oscillator on, no division FMR22 = 1 (slow read mode)		500.0		μA
		Low-power mode	$f_{(BCLK)}$ = 32 kHz In low-power mode FMR22 = FMR23 = 1 On flash memory (1)		160.0		μA
			$f_{(BCLK)}$ = 32 kHz In low-power mode On RAM (1)		45.0		μA
		Wait mode	Main clock stopped 40 MHz on-chip oscillator stopped 125 kHz on-chip oscillator on Peripheral clock operating T_{opr} = 25°C		20.0		μA
			$f_{(BCLK)}$ = 32 kHz (oscillation capacity High) 40 MHz on-chip oscillator stopped 125 kHz on-chip oscillator stopped Peripheral clock operating T_{opr} = 25°C		11.0		μA
			$f_{(BCLK)}$ = 32 kHz (oscillation capacity Low) 40 MHz on-chip oscillator stopped 125 kHz on-chip oscillator stopped Peripheral clock operating T_{opr} = 25°C		6.0		μA
		Stop mode	Main clock stopped 40 MHz on-chip oscillator stopped 125 kHz on-chip oscillator stopped Peripheral clock stopped T_{opr} = 25°C		1.7		μA
		During flash memory program	$f_{(BCLK)}$ = 10 MHz, PM17 = 1 (one wait) V_{CC1} = 5.0 V		20.0		mA
		During flash memory erase	$f_{(BCLK)}$ = 10 MHz, PM17 = 1 (one wait) V_{CC1} = 5.0 V		30.0		mA

Note:
1. This indicates the memory in which the program to be executed exists.

Downloaded from Arrow.com.

$V_{CC1} = V_{CC2} = 5$ V

Table 5.22 Electrical Characteristics (4)

R5F3651ENFC, R5F3651EDFC, R5F3651KNFC, R5F3650KNFA, R5F3650KNFB, R5F3651KDFC, R5F3650KDFB, R5F3650KDFA, R5F3651MNFC, R5F3650MNFA, R5F3650MNFB, R5F3651MDFC, R5F3650MDFA, R5F3650MDFB, R5F3651NNFC, R5F3650NNFA, R5F3650NNFB, R5F3651NDFC, R5F3650NDFA, R5F3650NDFB

$V_{CC1} = V_{CC2} = 4.2$ to 5.5 V, $V_{SS} = 0$ V at $T_{opr} = -20°C$ to 85°C/–40°C to 85°C, $f_{(BCLK)} = 32$ MHz unless otherwise specified.

Symbol	Parameter	Measuring Condition		Standard Min.	Standard Typ.	Standard Max.	Unit
R_{fXCIN}	Feedback resistance XCIN				8		MΩ
I_{CC}	Power supply current In single-chip, mode, the output pin are open and other pins are V_{SS}	High-speed mode	$f_{(BCLK)}$ = 32 MHz XIN = 4 MHz (square wave), PLL multiplied by 8 125 kHz on-chip oscillator stopped		26.0		mA
			$f_{(BCLK)}$ = 32 MHz, A/D conversion XIN = 4 MHz (square wave), PLL multiplied by 8 125 kHz on-chip oscillator stopped		27.0		mA
			$f_{(BCLK)}$ = 20 MHz XIN = 20 MHz (square wave) 125 kHz on-chip oscillator stopped		17.0		mA
		40 MHz on-chip oscillator mode	Main clock stopped 40 MHz on-chip oscillator on, divide-by-4 (f(BCLK) = 10 MHz) 125 kHz on-chip oscillator stopped		18.0		mA
		125 kHz on-chip oscillator mode	Main clock stopped 40 MHz on-chip oscillator stopped 125 kHz on-chip oscillator on, no division FMR22 = 1 (slow read mode)		550.0		μA
		Low-power mode	$f_{(BCLK)}$ = 32 kHz In low-power mode FMR22 = FMR23 = 1 on flash memory (1)		170.0		μA
			$f_{(BCLK)}$ = 32 kHz In low-power mode on RAM (1)		45.0		μA
		Wait mode	Main clock stopped 40 MHz on-chip oscillator stopped 125 kHz on-chip oscillator on Peripheral clock operating T_{opr} = 25°C		20.5		μA
			$f_{(BCLK)}$ = 32 kHz (oscillation capacity High) 40 MHz on-chip oscillator stopped 125 kHz on-chip oscillator stopped Peripheral clock operating T_{opr} = 25°C		11.0		μA
			$f_{(BCLK)}$ = 32 kHz (oscillation capacity low) 40 MHz on-chip oscillator stopped 125 kHz on-chip oscillator stopped Peripheral clock operating T_{opr} = 25°C		6.0		μA
		Stop mode	Main clock stopped 40 MHz on-chip oscillator stopped 125 kHz on-chip oscillator stopped Peripheral clock stopped T_{opr} = 25°C		1.7		μA
		During flash memory program	$f_{(BCLK)}$ = 10 MHz, PM17 = 1 (one wait) V_{CC1} = 5.0 V		20.0		mA
		During flash memory erase	$f_{(BCLK)}$ = 10 MHz, PM17 = 1 (one wait) V_{CC1} = 5.0 V		30.0		mA

Note:
1. This indicates the memory in which the program to be executed exists.

Downloaded from Arrow.com.

$V_{CC1} = V_{CC2} = 5$ V

Table 5.23 Electrical Characteristics (5)

R5F3651RNFC, R5F3650RNFA, R5F3650RNFB, R5F3651RDFC, R5F3650RDFA, R5F3650RDFB, R5F3651TNFC, R5F3650TNFA, R5F3650TNFB, R5F3651TDFC, R5F3650TDFA, R5F3650TDFB

$V_{CC1} = V_{CC2} = 4.2$ to 5.5 V, $V_{SS} = 0$ V at $T_{opr} = -20$ to 85°C/–40 to 85°C, $f_{(BCLK)} = 32$ MHz unless otherwise specified.

Symbol	Parameter	Measuring Condition		Standard			Unit
				Min.	Typ.	Max.	
R_{fXCIN}	Feedback resistance XCIN				15		MΩ
I_{CC}	Power supply current In single-chip, mode, the output pin are open and other pins are V_{SS}	High-speed mode	$f_{(BCLK)} = 32$ MHz XIN = 4 MHz (square wave), PLL multiplied by 8 125 kHz on-chip oscillator stopped		32.0		mA
			$f_{(BCLK)} = 32$ MHz, A/D conversion XIN = 4 MHz (square wave), PLL multiplied by 8 125 kHz on-chip oscillator stopped		32.7		mA
			$f_{(BCLK)} = 20$ MHz XIN = 20 MHz (square wave) 125 kHz on-chip oscillator stopped		21.0		mA
		40 MHz on-chip oscillator mode	Main clock stopped 40 MHz on-chip oscillator on, divide-by-4 (f(BCLK) = 10 MHz) 125 kHz on-chip oscillator stopped		23.0		mA
		125 kHz on-chip oscillator mode	Main clock stopped 40 MHz on-chip oscillator stopped 125 kHz on-chip oscillator on, no division FMR22 = 1 (slow read mode)		750.0		μA
		Low-power mode	$f_{(BCLK)} = 32$ kHz In low-power mode FMR22 = FMR23 = 1 on flash memory (1)		250.0		μA
			$f_{(BCLK)} = 32$ kHz In low-power mode on RAM (1)		45.0		μA
		Wait mode	Main clock stopped 40 MHz on-chip oscillator stopped 125 kHz on-chip oscillator on Peripheral clock operating $T_{opr} = 25$°C		21.0		μA
			$f_{(BCLK)} = 32$ kHz (oscillation capacity High) 40 MHz on-chip oscillator stopped 125 kHz on-chip oscillator stopped Peripheral clock operating $T_{opr} = 25$°C		11.0		μA
			$f_{(BCLK)} = 32$ kHz (oscillation capacity Low) 40 MHz on-chip oscillator stopped 125 kHz on-chip oscillator stopped Peripheral clock operating $T_{opr} = 25$°C		6.0		μA
		Stop mode	Main clock stopped 40 MHz on-chip oscillator stopped 125 kHz on-chip oscillator stopped Peripheral clock stopped $T_{opr} = 25$°C		1.7		μA
		During flash memory program	$f_{(BCLK)} = 10$ MHz, PM17 = 1 (one wait) $V_{CC1} = 5.0$ V		20.0		mA
		During flash memory erase	$f_{(BCLK)} = 10$ MHz, PM17 = 1 (one wait) $V_{CC1} = 5.0$ V		30.0		mA

Note:
1. This indicates the memory in which the program to be executed exists.

Downloaded from Arrow.com.

$V_{CC1} = V_{CC2} = 5$ V

5.2.2 Timing Requirements (Peripheral Functions and Others)

($V_{CC1} = V_{CC2} = 5$ V, $V_{SS} = 0$ V, at T_{opr} = -20°C to 85°C/-40°C to 85°C unless otherwise specified)

5.2.2.1 Reset Input ($\overline{\text{RESET}}$ Input)

Table 5.24 Reset Input ($\overline{\text{RESET}}$ Input)

Symbol	Parameter	Standard		Unit
		Min.	Max.	
$t_{w(RSTL)}$	$\overline{\text{RESET}}$ input low pulse width	10		µs

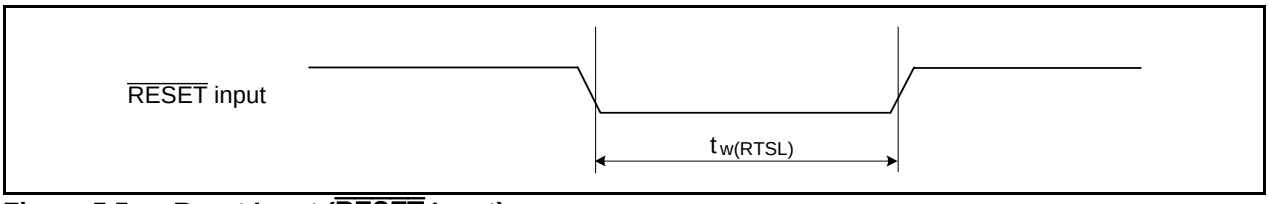

Figure 5.5 Reset Input ($\overline{\text{RESET}}$ Input)

5.2.2.2 External Clock Input

Table 5.25 External Clock Input (XIN Input) (1)

Symbol	Parameter	Standard		Unit
		Min.	Max.	
t_c	External clock input cycle time	50		ns
$t_{w(H)}$	External clock input high pulse width	20		ns
$t_{w(L)}$	External clock input low pulse width	20		ns
t_r	External clock rise time		9	ns
t_f	External clock fall time		9	ns

Note:
1. The condition is $V_{CC1} = V_{CC2} = 3.0$ to 5.0 V.

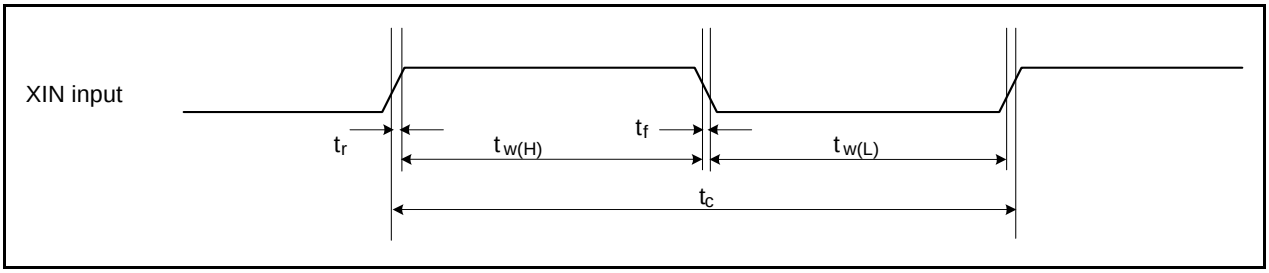

Figure 5.6 External Clock Input (XIN Input)

Downloaded from Arrow.com.

$V_{CC1} = V_{CC2} = 5$ V

Timing Requirements

($V_{CC1} = V_{CC2} = 5$ V, $V_{SS} = 0$ V, at T_{opr} = -20°C to 85°C/-40°C to 85°C unless otherwise specified)

5.2.2.3 Timer A Input

Table 5.26 Timer A Input (Counter Input in Event Counter Mode)

Symbol	Parameter	Standard		Unit
		Min.	Max.	
$t_{c(TA)}$	TAiIN input cycle time	100		ns
$t_{w(TAH)}$	TAiIN input high pulse width	40		ns
$t_{w(TAL)}$	TAiIN input low pulse width	40		ns

Table 5.27 Timer A Input (Gating Input in Timer Mode)

Symbol	Parameter	Standard		Unit
		Min.	Max.	
$t_{c(TA)}$	TAiIN input cycle time	400		ns
$t_{w(TAH)}$	TAiIN input high pulse width	200		ns
$t_{w(TAL)}$	TAiIN input low pulse width	200		ns

Table 5.28 Timer A Input (External Trigger Input in One-Shot Timer Mode)

Symbol	Parameter	Standard		Unit
		Min.	Max.	
$t_{c(TA)}$	TAiIN input cycle time	200		ns
$t_{w(TAH)}$	TAiIN input high pulse width	100		ns
$t_{w(TAL)}$	TAiIN input low pulse width	100		ns

Table 5.29 Timer A Input (External Trigger Input in Pulse Width Modulation Mode and Programmable Output Mode)

Symbol	Parameter	Standard		Unit
		Min.	Max.	
$t_{w(TAH)}$	TAiIN input high pulse width	100		ns
$t_{w(TAL)}$	TAiIN input low pulse width	100		ns

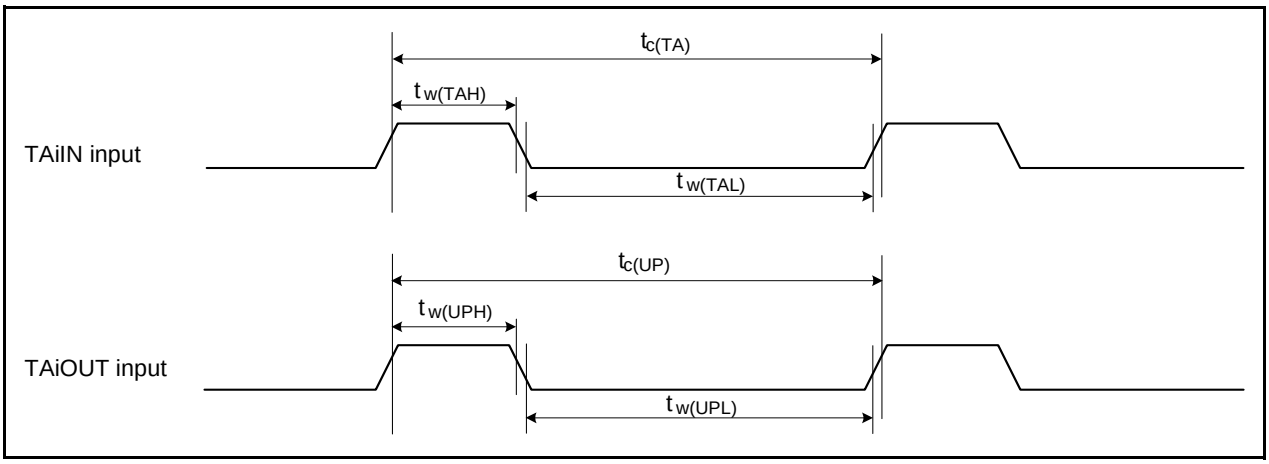

Figure 5.7 Timer A Input

Downloaded from Arrow.com.

$V_{CC1} = V_{CC2} = 5$ V

Timing Requirements

($V_{CC1} = V_{CC2} = 5$ V, $V_{SS} = 0$ V, at T_{opr} = -20°C to 85°C/-40°C to 85°C unless otherwise specified)

Table 5.30 Timer A Input (Two-Phase Pulse Input in Event Counter Mode)

Symbol	Parameter	Standard		Unit
		Min.	Max.	
$t_{c(TA)}$	TAiIN input cycle time	800		ns
$t_{su(TAIN-TAOUT)}$	TAiOUT input setup time	200		ns
$t_{su(TAOUT-TAIN)}$	TAiIN input setup time	200		ns

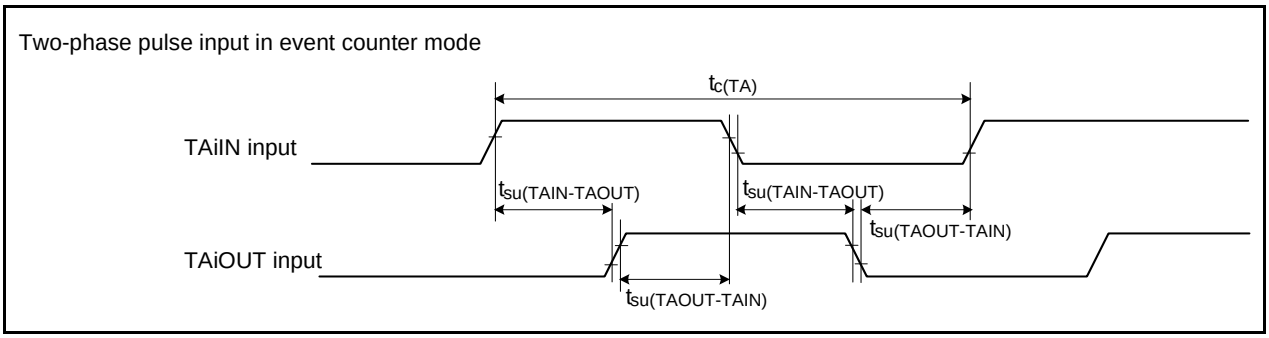

Figure 5.8 Timer A Input (Two-Phase Pulse Input in Event Counter Mode)

Downloaded from Arrow.com.

$V_{CC1} = V_{CC2} = 5$ V

Timing Requirements

($V_{CC1} = V_{CC2} = 5$ V, $V_{SS} = 0$ V, at T_{opr} = -20°C to 85°C/-40°C to 85°C unless otherwise specified)

5.2.2.4 Timer B Input

Table 5.31 Timer B Input (Counter Input in Event Counter Mode)

Symbol	Parameter	Standard		Unit
		Min.	Max.	
$t_{c(TB)}$	TBiIN input cycle time (counted on one edge)	100		ns
$t_{w(TBH)}$	TBiIN input high pulse width (counted on one edge)	40		ns
$t_{w(TBL)}$	TBiIN input low pulse width (counted on one edge)	40		ns
$t_{c(TB)}$	TBiIN input cycle time (counted on both edges)	200		ns
$t_{w(TBH)}$	TBiIN input high pulse width (counted on both edges)	80		ns
$t_{w(TBL)}$	TBiIN input low pulse width (counted on both edges)	80		ns

Table 5.32 Timer B Input (Pulse Period Measurement Mode)

Symbol	Parameter	Standard		Unit
		Min.	Max.	
$t_{c(TB)}$	TBiIN input cycle time	400		ns
$t_{w(TBH)}$	TBiIN input high pulse width	200		ns
$t_{w(TBL)}$	TBiIN input low pulse width	200		ns

Table 5.33 Timer B Input (Pulse Width Measurement Mode)

Symbol	Parameter	Standard		Unit
		Min.	Max.	
$t_{c(TB)}$	TBiIN input cycle time	400		ns
$t_{w(TBH)}$	TBiIN input high pulse width	200		ns
$t_{w(TBL)}$	TBiIN input low pulse width	200		ns

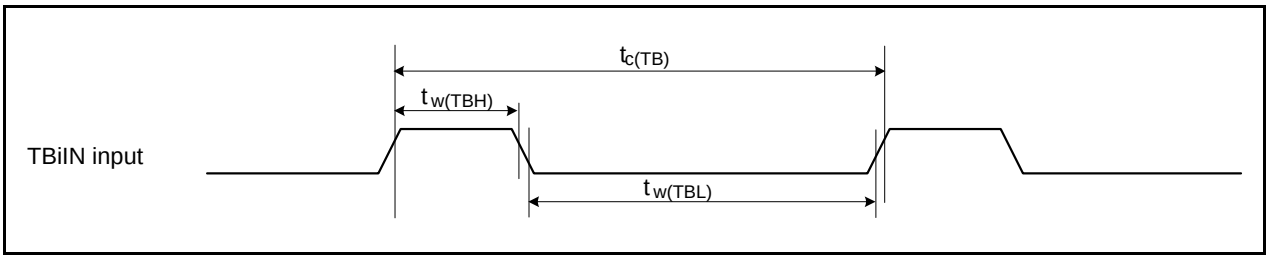

Figure 5.9 Timer B Input

Downloaded from Arrow.com.

$V_{CC1} = V_{CC2} = 5$ V

Timing Requirements

($V_{CC1} = V_{CC2} = 5$ V, $V_{SS} = 0$ V, at T_{opr} = -20°C to 85°C/-40°C to 85°C unless otherwise specified)

5.2.2.5 Serial Interface

Table 5.34 Serial Interface

Symbol	Parameter	Standard		Unit
		Min.	Max.	
$t_{c(CK)}$	CLKi input cycle time	200		ns
$t_{w(CKH)}$	CLKi input high pulse width	100		ns
$t_{w(CKL)}$	CLKi input low pulse width	100		ns
$t_{d(C-Q)}$	TXDi output delay time		80	ns
$t_{h(C-Q)}$	TXDi hold time	0		ns
$t_{su(D-C)}$	RXDi input setup time	70		ns
$t_{h(C-D)}$	RXDi input hold time	90		ns

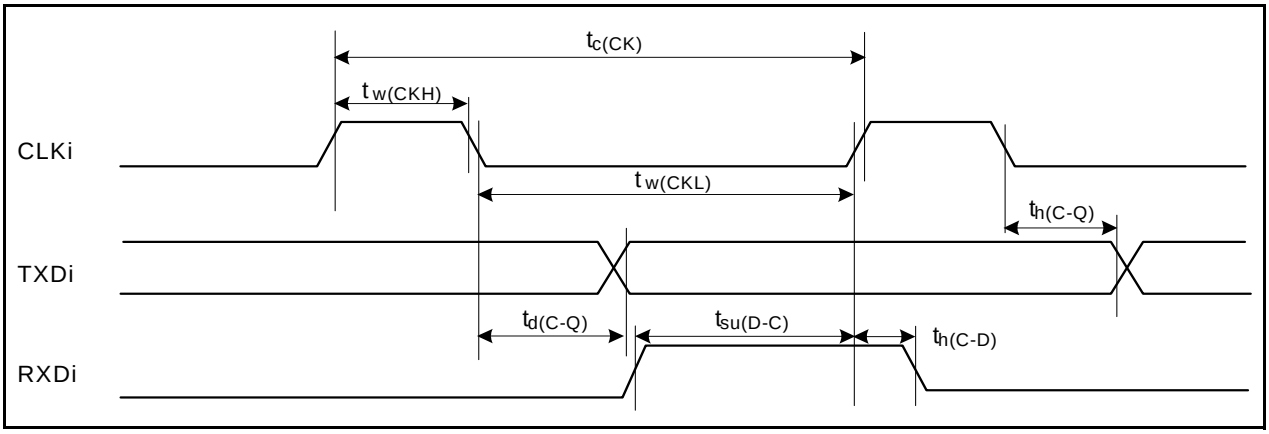

Figure 5.10 Serial Interface

5.2.2.6 External Interrupt $\overline{INTi}$ Input

Table 5.35 External Interrupt $\overline{INTi}$ Input

Symbol	Parameter	Standard		Unit
		Min.	Max.	
$t_{w(INH)}$	$\overline{INTi}$ input high pulse width	250		ns
$t_{w(INL)}$	$\overline{INTi}$ input low pulse width	250		ns

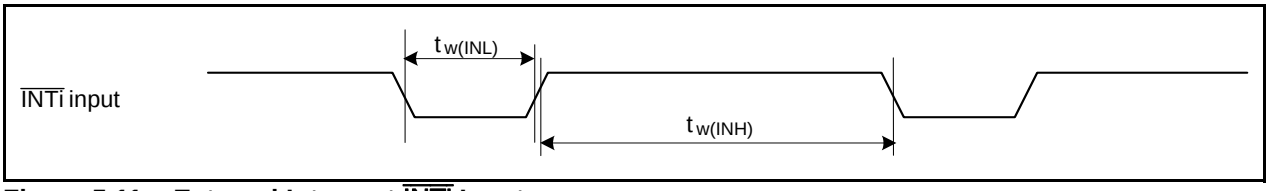

Figure 5.11 External Interrupt $\overline{INTi}$ Input

Downloaded from Arrow.com.

$V_{CC1} = V_{CC2} = 5$ V

Timing Requirements

($V_{CC1} = V_{CC2} = 5$ V, $V_{SS} = 0$ V, at T_{opr} = -20°C to 85°C/-40°C to 85°C unless otherwise specified)

5.2.2.7 Multi-master I²C-bus

Table 5.36 Multi-master I²C-bus

Symbol	Parameter	Standard Clock Mode		Fast-mode		Unit
		Min.	Max.	Min.	Max.	
t_{BUF}	Bus free time	4.7		1.3		µs
$t_{HD;STA}$	Hold time in start condition	4.0		0.6		µs
t_{LOW}	Hold time in SCL clock 0 status	4.7		1.3		µs
t_R	SCL, SDA signals' rising time		1000	20 + 0.1 Cb	300	ns
$t_{HD;DAT}$	Data hold time	0		0	0.9	µs
t_{HIGH}	Hold time in SCL clock 1 status	4.0		0.6		µs
f_F	SCL, SDA signals' falling time		300	20 + 0.1 Cb	300	ns
$t_{su;DAT}$	Data setup time	250		100		ns
$t_{su;STA}$	Setup time in restart condition	4.7		0.6		µs
$t_{su;STO}$	Stop condition setup time	4.0		0.6		µs

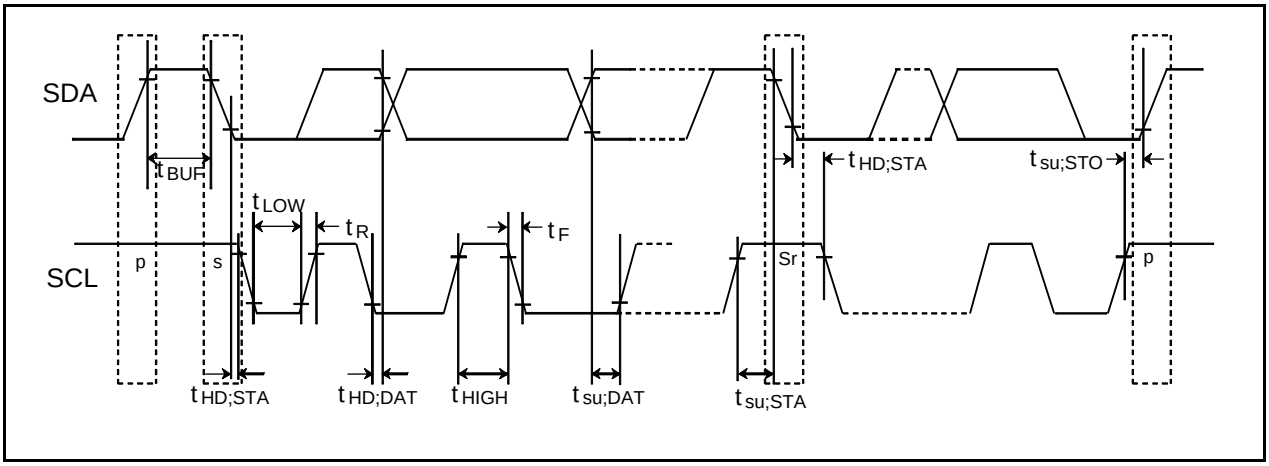

Figure 5.12 Multi-master I²C-bus

Downloaded from Arrow.com.

$V_{CC1} = V_{CC2} = 5$ V

Timing Requirements

($V_{CC1} = V_{CC2} = 5$ V, $V_{SS} = 0$ V, at T_{opr} = -20°C to 85°C/-40°C to 85°C unless otherwise specified)

5.2.3 Timing Requirements (Memory Expansion Mode and Microprocessor Mode)

Table 5.37 Memory Expansion Mode and Microprocessor Mode

Symbol	Parameter	Standard		Unit
		Min.	Max.	
$t_{ac1(RD-DB)}$	Data input access time (for setting with no wait)		(Note 1)	ns
$t_{ac2(RD-DB)}$	Data input access time (for setting with 1 to 3 waits)		(Note 2)	ns
$t_{ac3(RD-DB)}$	Data input access time (when accessing multiplex bus area)		(Note 3)	ns
$t_{ac4(RD-DB)}$	Data input access time (for setting with 2ϕ + 3ϕ or more)		(Note 4)	ns
$t_{su(DB-RD)}$	Data input setup time	40		ns
$t_{su(RDY-BCLK)}$	$\overline{RDY}$ input setup time	80		ns
$t_{h(RD-DB)}$	Data input hold time	0		ns
$t_{h(BCLK-RDY)}$	$\overline{RDY}$ input hold time	0		ns

Notes:

1. Calculated according to the BCLK frequency as follows:

   $$\frac{0.5 \times 10^9}{f_{(BCLK)}} - 45[ns]$$

2. Calculated according to the BCLK frequency as follows:

   $$\frac{(n + 0.5) \times 10^9}{f_{(BCLK)}} - 45[ns]$$ n is 1 for 1 wait setting, 2 for 2 waits setting and 3 for 3 waits setting.

3. Calculated according to the BCLK frequency as follows:

   $$\frac{(n - 0.5) \times 10^9}{f_{(BCLK)}} - 45[ns]$$ n is 2 for 2 waits setting, and 3 for 3 waits setting.

4. Calculated according to the BCLK frequency as follows:

   $$\frac{n \times 10^9}{f_{(BCLK)}} - 45[ns]$$ n is 3 for 2ϕ + 3ϕ, 4 for 2ϕ + 4ϕ, 4 for 3ϕ + 4ϕ, and 5 for 4ϕ + 5ϕ.

Downloaded from Arrow.com.

Memory Expansion Mode and Microprocessor Mode

$V_{CC1} = V_{CC2} = 5$ V

(Effective in wait state setting)

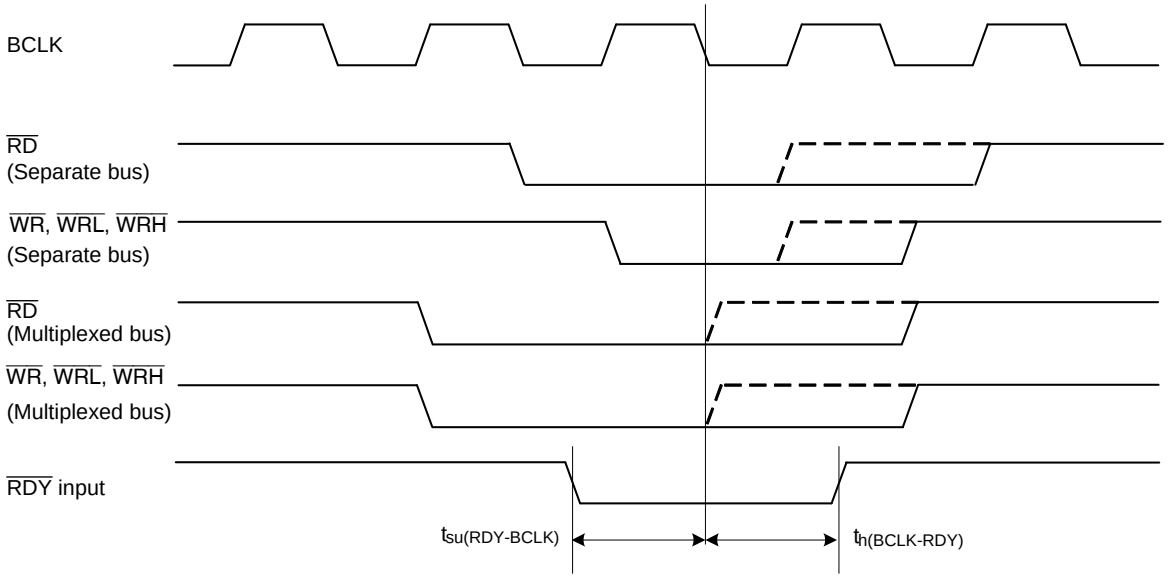

Measuring conditions

- $V_{CC1} = V_{CC2} = 5$ V
- Input timing voltage: $V_{IL} = 1.0$ V, $V_{IH} = 4.0$ V
- Output timing voltage: $V_{OL} = 2.5$ V, $V_{OH} = 2.5$ V

Figure 5.13 Timing Diagram

Downloaded from Arrow.com.

$V_{CC1} = V_{CC2} = 5$ V

5.2.4 Switching Characteristics (Memory Expansion Mode and Microprocessor Mode)

($V_{CC1} = V_{CC2} = 5$ V, $V_{SS} = 0$ V, at T_{opr} = -20°C to 85°C/-40°C to 85°C unless otherwise specified)

5.2.4.1 In No Wait State Setting

Table 5.38 Memory Expansion Mode and Microprocessor Mode (in No Wait State Setting)

Symbol	Parameter	Measuring Condition	Standard		Unit
			Min.	Max.	
$t_{d(BCLK-AD)}$	Address output delay time	See Figure 5.14		25	ns
$t_{h(BCLK-AD)}$	Address output hold time (in relation to BCLK)		0		ns
$t_{h(RD-AD)}$	Address output hold time (in relation to RD)		0		ns
$t_{h(WR-AD)}$	Address output hold time (in relation to WR)		(Note 2)		ns
$t_{d(BCLK-CS)}$	Chip select output delay time			25	ns
$t_{h(BCLK-CS)}$	Chip select output hold time (in relation to BCLK)		0		ns
$t_{d(BCLK-ALE)}$	ALE signal output delay time			15	ns
$t_{h(BCLK-ALE)}$	ALE signal output hold time		–4		ns
$t_{d(BCLK-RD)}$	RD signal output delay time			25	ns
$t_{h(BCLK-RD)}$	RD signal output hold time		0		ns
$t_{d(BCLK-WR)}$	WR signal output delay time			25	ns
$t_{h(BCLK-WR)}$	WR signal output hold time		0		ns
$t_{d(BCLK-DB)}$	Data output delay time (in relation to BCLK)			40	ns
$t_{h(BCLK-DB)}$	Data output hold time (in relation to BCLK) (3)		0		ns
$t_{d(DB-WR)}$	Data output delay time (in relation to WR)		(Note 1)		ns
$t_{h(WR-DB)}$	Data output hold time (in relation to WR) (3)		(Note 2)		ns

Notes:

1. Calculated according to the BCLK frequency as follows:

   $\frac{0.5 \times 10^9}{f_{(BCLK)}} - 40[ns]$ $f_{(BCLK)}$ is 12.5 MHz or less.

2. Calculated according to the BCLK frequency as follows:

   $\frac{0.5 \times 10^9}{f_{(BCLK)}} - 10[ns]$

3. This standard value shows the timing when the output is off, and does not show hold time of data bus.
   Hold time of data bus varies with capacitor volume and pull-up (pull-down) resistance value.
   Hold time of data bus is expressed in
   $t = -CR \times \ln(1 - V_{OL}/V_{CC2})$
   by a circuit of the right figure.
   For example, when $V_{OL} = 0.2V_{CC2}$, C = 30 pF, R = 1 kΩ, hold time of output low level is
   $t = -30\text{ pF} \times 1\text{ k}\Omega \times \ln(1 - 0.2V_{CC2}/V_{CC2})$
   = 6.7 ns.

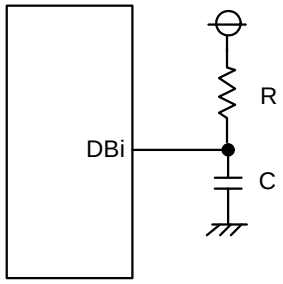

Downloaded from Arrow.com.

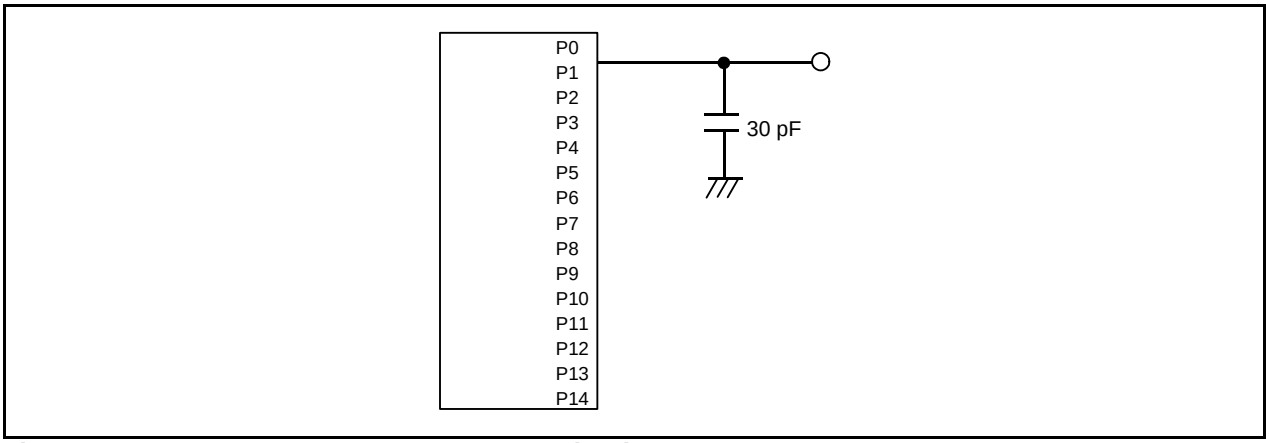

Figure 5.14 Ports P0 to P14 Measurement Circuit

Downloaded from Arrow.com.

Memory Expansion Mode and Microprocessor Mode
(in no wait state setting)

$V_{CC1} = V_{CC2} = 5V$

Read timing

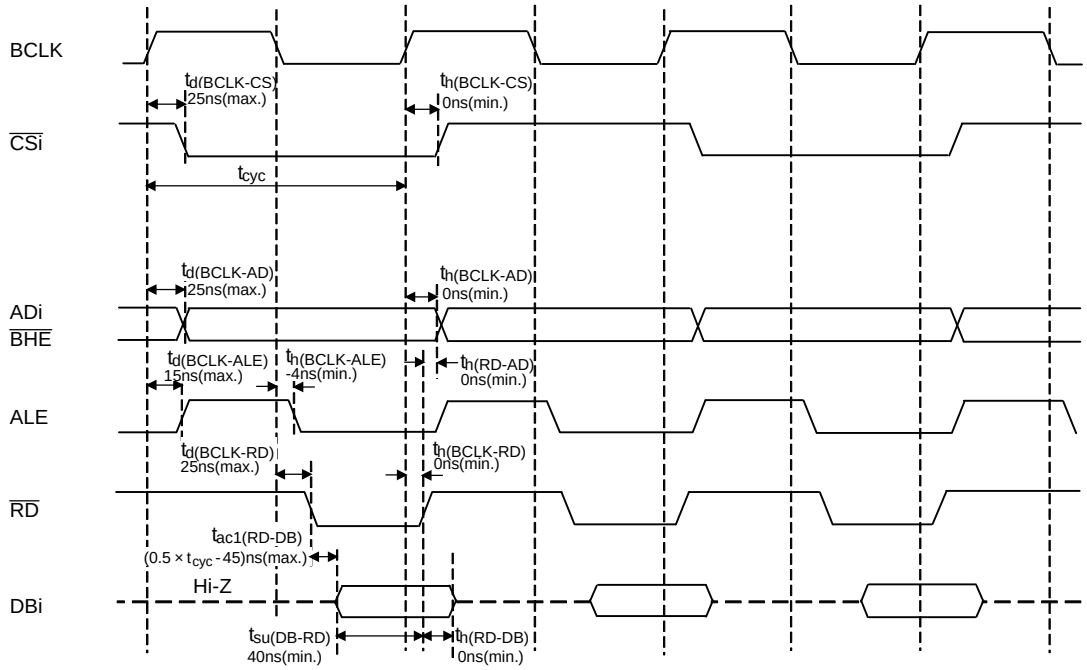

Write timing

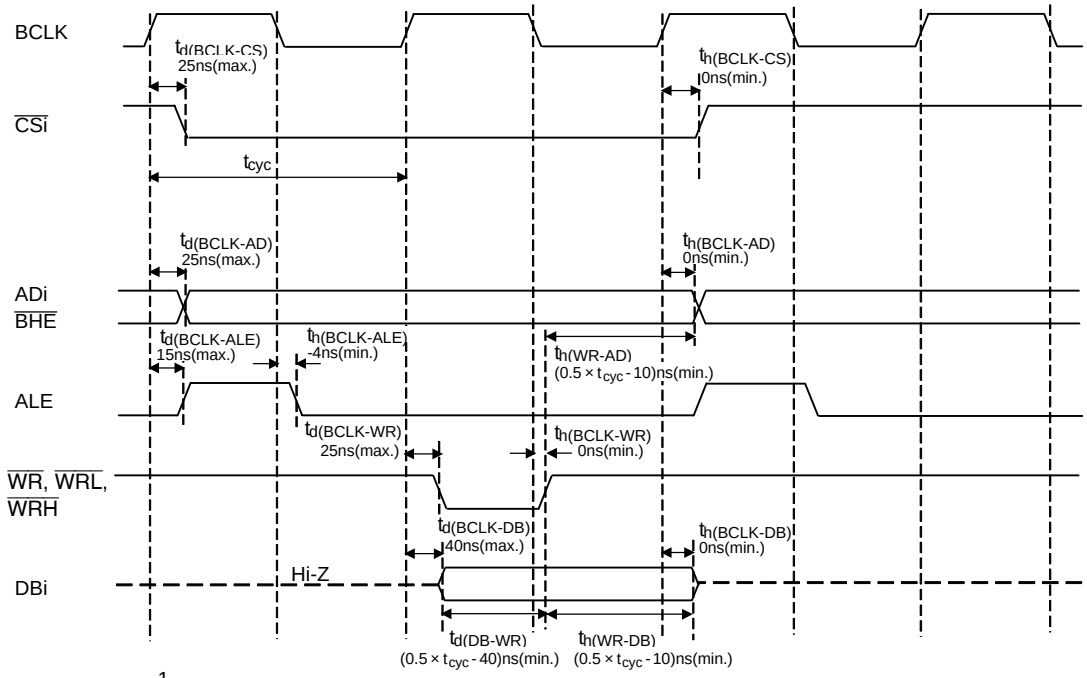

$$t_{cyc} = \frac{1}{f_{(BCLK)}}$$

Measuring conditions

- $V_{CC1} = V_{CC2} = 5V$
- Input timing voltage: $V_{IL} = 0.8$ V, $V_{IH} = 2.0$ V
- Output timing voltage: $V_{OL} = 0.4$ V, $V_{OH} = 2.4$ V

Figure 5.15 Timing Diagram

Downloaded from Arrow.com.

$V_{CC1} = V_{CC2} = 5$ V

Switching Characteristics

($V_{CC1} = V_{CC2} = 5$ V, $V_{SS} = 0$ V, at T_{opr} = -20°C to 85°C/-40°C to 85°C unless otherwise specified)

5.2.4.2 In 1 to 3 Waits Setting and When Accessing External Area

Table 5.39 Memory Expansion Mode and Microprocessor Mode (in 1 to 3 Waits Setting and When Accessing External Area)

Symbol	Parameter	Measuring Condition	Standard		Unit
			Min.	Max.	
$t_{d(BCLK-AD)}$	Address output delay time	See Figure 5.14		25	ns
$t_{h(BCLK-AD)}$	Address output hold time (in relation to BCLK)		0		ns
$t_{h(RD-AD)}$	Address output hold time (in relation to RD)		0		ns
$t_{h(WR-AD)}$	Address output hold time (in relation to WR)		(Note 2)		ns
$t_{d(BCLK-CS)}$	Chip select output delay time			25	ns
$t_{h(BCLK-CS)}$	Chip select output hold time (in relation to BCLK)		0		ns
$t_{d(BCLK-ALE)}$	ALE signal output delay time			15	ns
$t_{h(BCLK-ALE)}$	ALE signal output hold time		-4		ns
$t_{d(BCLK-RD)}$	RD signal output delay time			25	ns
$t_{h(BCLK-RD)}$	RD signal output hold time		0		ns
$t_{d(BCLK-WR)}$	WR signal output delay time			25	ns
$t_{h(BCLK-WR)}$	WR signal output hold time		0		ns
$t_{d(BCLK-DB)}$	Data output delay time (in relation to BCLK)			40	ns
$t_{h(BCLK-DB)}$	Data output hold time (in relation to BCLK) (3)		0		ns
$t_{d(DB-WR)}$	Data output delay time (in relation to WR)		(Note 1)		ns
$t_{h(WR-DB)}$	Data output hold time (in relation to WR)(3)		(Note 2)		ns

Notes:

1. Calculated according to the BCLK frequency as follows:

$$\frac{(n-0.5)\times 10^9}{f_{(BCLK)}} - 40[ns]$$

n is 1 for 1 wait setting, 2 for 2 waits setting and 3 for 3 waits setting.
When n = 1, $f_{(BCLK)}$ is 12.5 MHz or less.

2. Calculated according to the BCLK frequency as follows:

$$\frac{0.5\times 10^9}{f_{(BCLK)}} - 10[ns]$$

3. This standard value shows the timing when the output is off, and does not show hold time of data bus.
Hold time of data bus varies with capacitor volume and pull-up (pull-down) resistance value.
Hold time of data bus is expressed in
$t = -CR \times \ln(1 - V_{OL}/V_{CC2})$
by a circuit of the right figure.
For example, when $V_{OL} = 0.2V_{CC2}$, C = 30 pF, R = 1 kΩ, hold time of output low level is
$t = -30\text{ pF} \times 1\text{ k}\Omega \times \ln(1 - 0.2V_{CC2}/V_{CC2})$
= 6.7 ns.

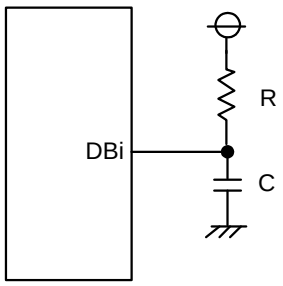

Downloaded from Arrow.com.

Memory Expansion Mode and Microprocessor Mode
(in 1 to 3 waits setting and when accessing external area)

$V_{CC1} = V_{CC2} = 5V$

Read timing

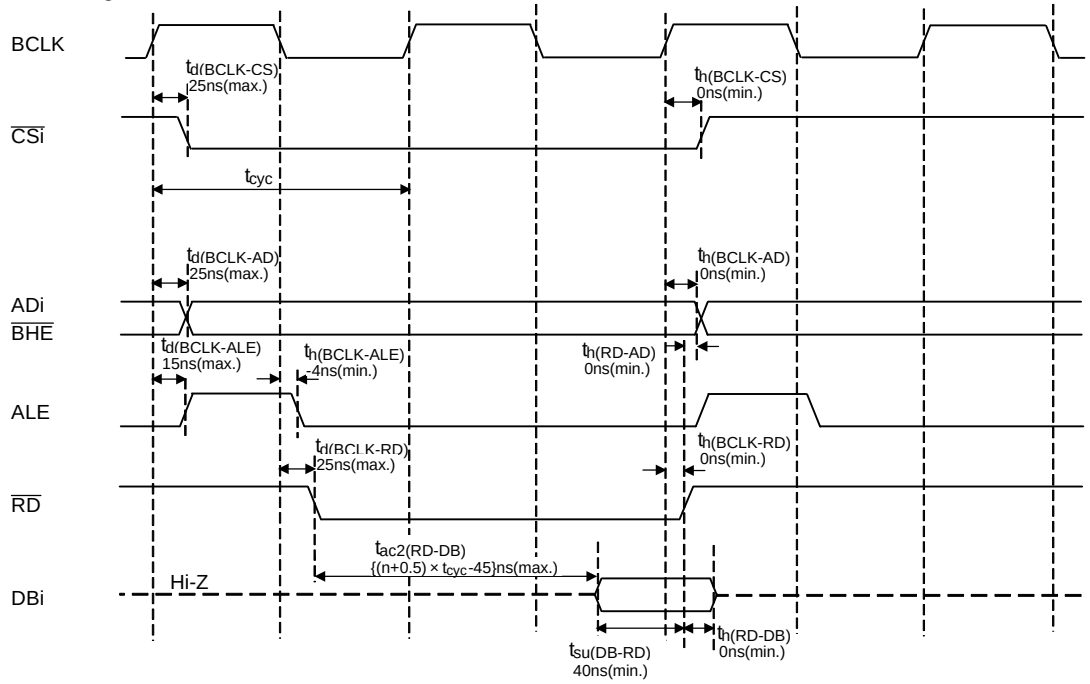

Write timing

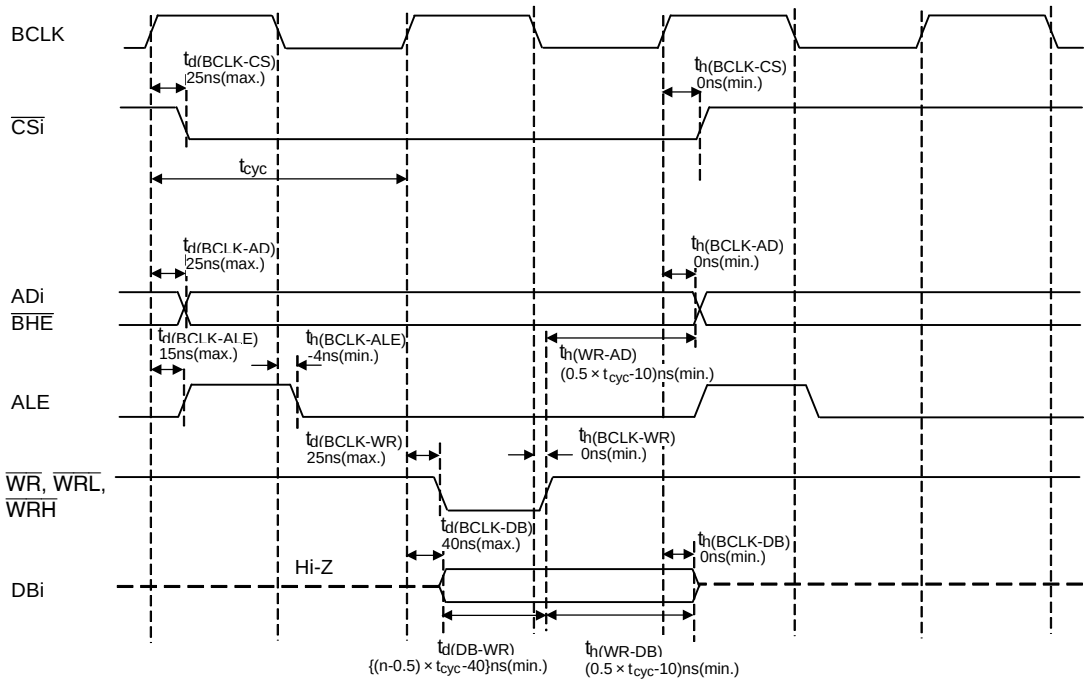

$$t_{cyc} = \frac{1}{f_{(BCLK)}}$$

Measuring conditions

- $V_{CC1} = V_{CC2} = 5V$
- Input timing voltage: $V_{IL} = 0.8$ V, $V_{IH} = 2.0$ V
- Output timing voltage: $V_{OL} = 0.4$ V, $V_{OH} = 2.4$ V

n: 1 (when 1 wait)
2 (when 2 waits)
3 (when 3 waits)

Figure 5.16 Timing Diagram

Downloaded from Arrow.com.

$V_{CC1} = V_{CC2} = 5$ V

Switching Characteristics

($V_{CC1} = V_{CC2} = 5$ V, $V_{SS} = 0$ V, at T_{opr} = -20°C to 85°C/-40°C to 85°C unless otherwise specified)

5.2.4.3 In 2 or 3 Waits Setting, and When Accessing External Area and Using Multiplexed Bus

Table 5.40 Memory Expansion Mode and Microprocessor Mode (in 2 or 3 Waits Setting, and When Accessing External Area and Using Multiplexed Bus) (5)

Symbol	Parameter	Measuring Condition	Standard		Unit
			Min.	Max.	
$t_{d(BCLK-AD)}$	Address output delay time	See Figure 5.14		25	ns
$t_{h(BCLK-AD)}$	Address output hold time (in relation to BCLK)		0		ns
$t_{h(RD-AD)}$	Address output hold time (in relation to RD)		(Note 1)		ns
$t_{h(WR-AD)}$	Address output hold time (in relation to WR)		(Note 1)		ns
$t_{d(BCLK-CS)}$	Chip select output delay time			25	ns
$t_{h(BCLK-CS)}$	Chip select output hold time (in relation to BCLK)		0		ns
$t_{h(RD-CS)}$	Chip select output hold time (in relation to RD)		(Note 1)		ns
$t_{h(WR-CS)}$	Chip select output hold time (in relation to WR)		(Note 1)		ns
$t_{d(BCLK-RD)}$	RD signal output delay time			25	ns
$t_{h(BCLK-RD)}$	RD signal output hold time		0		ns
$t_{d(BCLK-WR)}$	WR signal output delay time			25	ns
$t_{h(BCLK-WR)}$	WR signal output hold time		0		ns
$t_{d(BCLK-DB)}$	Data output delay time (in relation to BCLK)			40	ns
$t_{h(BCLK-DB)}$	Data output hold time (in relation to BCLK)		0		ns
$t_{d(DB-WR)}$	Data output delay time (in relation to WR)		(Note 2)		ns
$t_{h(WR-DB)}$	Data output hold time (in relation to WR)		(Note 1)		ns
$t_{d(BCLK-ALE)}$	ALE signal output delay time (in relation to BCLK)			15	ns
$t_{h(BCLK-ALE)}$	ALE signal output hold time (in relation to BCLK)		–4		ns
$t_{d(AD-ALE)}$	ALE signal output delay time (in relation to Address)		(Note 3)		ns
$t_{h(AD-ALE)}$	ALE signal output hold time (in relation to Address)		(Note 4)		ns
$t_{d(AD-RD)}$	RD signal output delay from the end of address		0		ns
$t_{d(AD-WR)}$	WR signal output delay from the end of address		0		ns
$t_{dz(RD-AD)}$	Address output floating start time			8	ns

Notes:

1. Calculated according to the BCLK frequency as follows:

$$\frac{0.5 \times 10^9}{f_{(BCLK)}} - 10[ns]$$

2. Calculated according to the BCLK frequency as follows:

$$\frac{(n - 0.5) \times 10^9}{f_{(BCLK)}} - 40[ns]$$ n is 2 for 2-wait setting, 3 for 3-wait setting.

3. Calculated according to the BCLK frequency as follows:

$$\frac{0.5 \times 10^9}{f_{(BCLK)}} - 25[ns]$$

4. Calculated according to the BCLK frequency as follows:

$$\frac{0.5 \times 10^9}{f_{(BCLK)}} - 15[ns]$$

5. When using multiplex bus, set $f_{(BCLK)}$ 12.5 MHz or less.

Downloaded from Arrow.com.

Memory Expansion Mode and Microprocessor Mode
(in 2 or 3 waits setting, and when accessing external area and using multiplexed bus)

$V_{CC1} = V_{CC2} = 5V$

Read timing

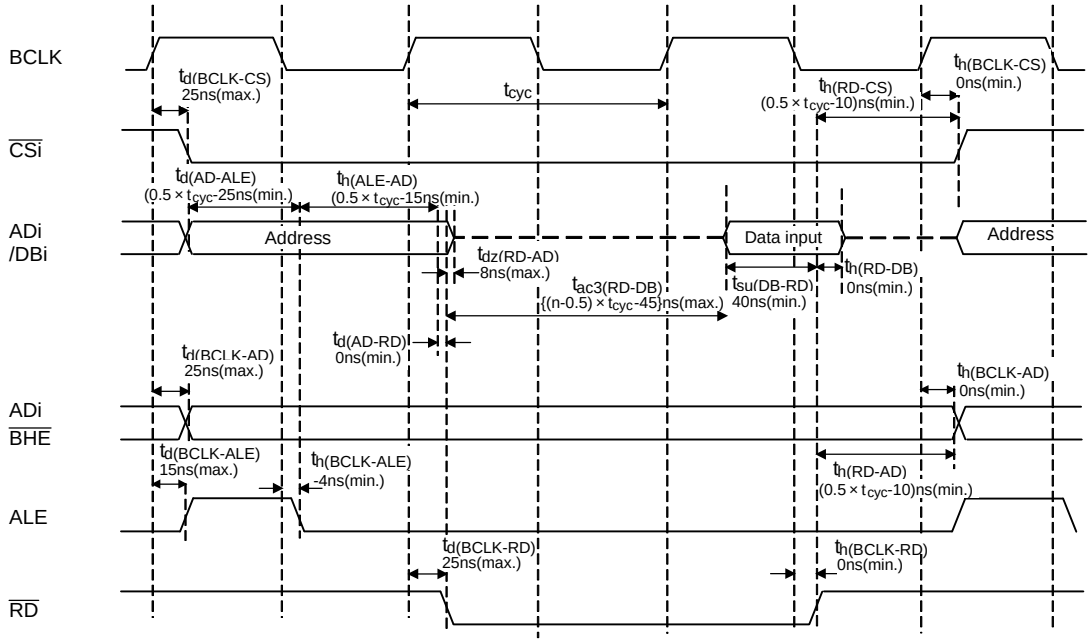

Write timing

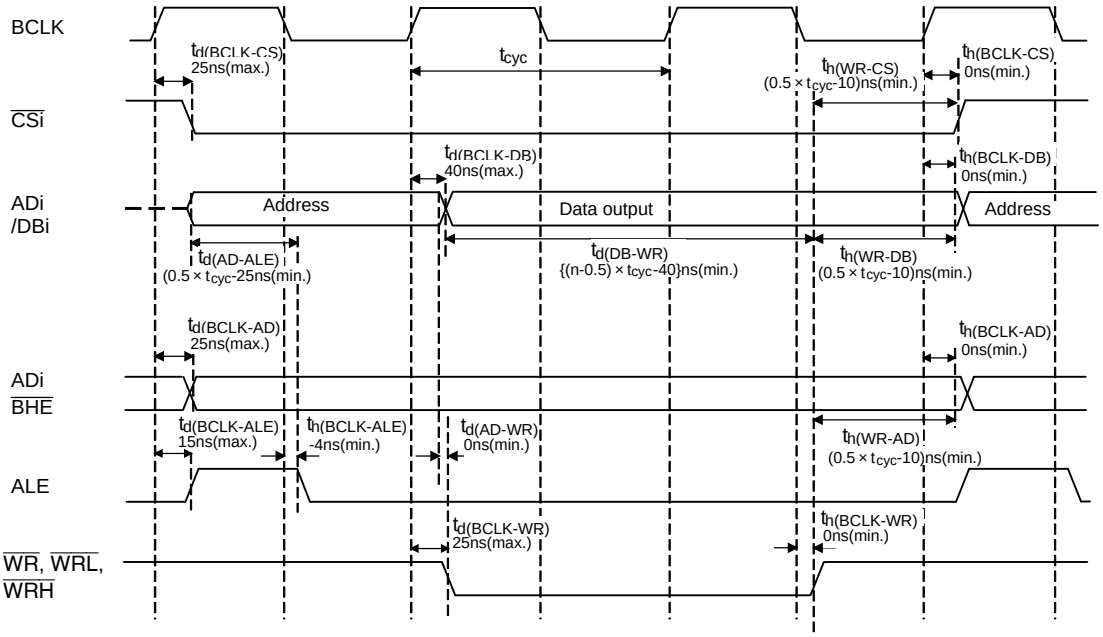

Measuring conditions

- $V_{CC1} = V_{CC2} = 5V$
- Input timing voltage: $V_{IL} = 0.8$ V, $V_{IH} = 2.0$ V
- Output timing voltage: $V_{OL} = 0.4$ V, $V_{OH} = 2.4$ V

n: 2 (when 2 waits)
3 (when 3 waits)

Figure 5.17 Timing Diagram

Downloaded from Arrow.com.

$V_{CC1} = V_{CC2} = 5$ V

Switching Characteristics

($V_{CC1} = V_{CC2} = 5$ V, $V_{SS} = 0$ V, at T_{opr} = -20°C to 85°C/-40°C to 85°C unless otherwise specified)

5.2.4.4 In Wait State Setting 2ϕ + 3ϕ, 2ϕ + 4ϕ, 3ϕ + 4ϕ, and 4ϕ + 5ϕ, and When Accessing External Area

Table 5.41 Memory Expansion Mode and Microprocessor Mode (in Wait State Setting 2 ϕ + 3 ϕ, 2 ϕ + 4ϕ, 3ϕ + 4ϕ, and 4ϕ + 5ϕ, and When Accessing External Area)

Symbol	Parameter	Measuring Condition	Standard		Unit
			Min.	Max.	
$t_{d(BCLK-AD)}$	Address output delay time	See Figure 5.14		25	ns
$t_{h(BCLK-AD)}$	Address output hold time (in relation to BCLK)		0		ns
$t_{h(RD-AD)}$	Address output hold time (in relation to RD)		0		ns
$t_{h(WR-AD)}$	Address output hold time (in relation to WR)		(Note 2)		ns
$t_{d(BCLK-CS)}$	Chip select output delay time			25	ns
$t_{h(BCLK-CS)}$	Chip select output hold time (in relation to BCLK)		0		ns
$t_{d(BCLK-ALE)}$	ALE signal output delay time			15	ns
$t_{h(BCLK-ALE)}$	ALE signal output hold time		-4		ns
$t_{d(BCLK-RD)}$	RD signal output delay time			25	ns
$t_{h(BCLK-RD)}$	RD signal output hold time		0		ns
$t_{d(BCLK-WR)}$	WR signal output delay time			25	ns
$t_{h(BCLK-WR)}$	WR signal output hold time		0		ns
$t_{d(BCLK-DB)}$	Data output delay time (in relation to BCLK)			40	ns
$t_{h(BCLK-DB)}$	Data output hold time (in relation to BCLK) (3)		0		ns
$t_{d(DB-WR)}$	Data output delay time (in relation to WR)		(Note 1)		ns
$t_{h(WR-DB)}$	Data output hold time (in relation to WR) (3)		(Note 2)		ns

Notes:

1. Calculated according to the BCLK frequency as follows:

$$\frac{(n-0.5)\times 10^9}{f_{(BCLK)}} - 40[ns]$$

n is 3 for 2ϕ + 3ϕ, 4 for 2ϕ + 4ϕ, 4 for 3ϕ + 4ϕ, and 5 for 4ϕ + 5ϕ.

2. Calculated according to the BCLK frequency as follows:

$$\frac{0.5\times 10^9}{f_{(BCLK)}} - 10[ns]$$

3. This standard value shows the timing when the output is off, and does not show hold time of data bus.
Hold time of data bus varies with capacitor volume and pull-up (pull-down) resistance value.
Hold time of data bus is expressed in
$t = -CR \times \ln(1 - V_{OL}/V_{CC2})$
by a circuit of the right figure.
For example, when $V_{OL} = 0.2V_{CC2}$, C = 30 pF, R = 1 kΩ, hold time of output low level is
$t = -30\text{ pF} \times 1\text{ k}\Omega \times \ln(1 - 0.2V_{CC2}/V_{CC2})$
= 6.7 ns.

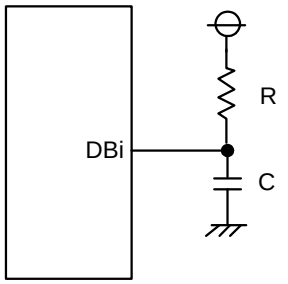

Downloaded from Arrow.com.

Memory Expansion Mode and Microprocessor Mode
(in wait state setting 2 ϕ + 3 ϕ, 2 ϕ + 4 ϕ, 3ϕ + 4 ϕ, and 4 ϕ + 5 ϕ, and when accessing external area)

$V_{CC1} = V_{CC2} = 5V$

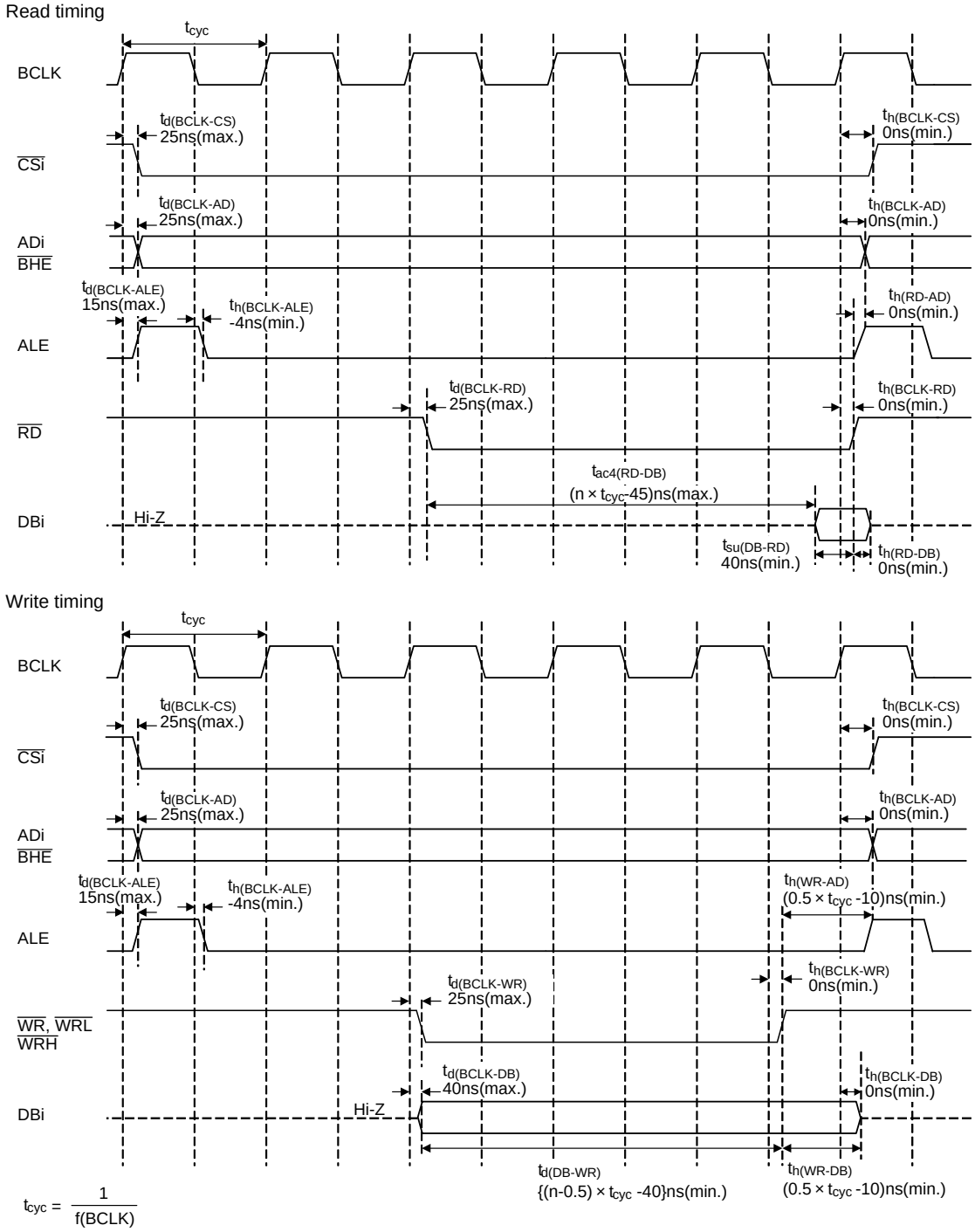

$t_{cyc} = \frac{1}{f(BCLK)}$

Measuring conditions

- $V_{CC1} = V_{CC2} = 5V$
- Input timing voltage: V_{IL} = 0.8 V, V_{IH} = 2.0 V
- Output timing voltage: V_{OL} = 0.4 V, V_{OH} = 2.4 V

n: 3 (when 2 ϕ + 3 ϕ)
4 (when 2 ϕ + 4 ϕ or 3 ϕ + 4 ϕ)
5 (when 4 ϕ + 5 ϕ)

Figure 5.18 Timing Diagram

Downloaded from Arrow.com.

$V_{CC1} = V_{CC2} = 5$ V

Switching Characteristics

($V_{CC1} = V_{CC2} = 5$ V, $V_{SS} = 0$ V, at T_{opr} = -20°C to 85°C/-40°C to 85°C unless otherwise specified)

5.2.4.5 In Wait State Setting 2ϕ + 3ϕ, 2ϕ + 4ϕ, 3ϕ + 4ϕ, and 4ϕ + 5ϕ, and When Inserting 1 to 3 Recovery Cycles and Accessing External Area

Table 5.42 Memory Expansion and Microprocessor Modes (in Wait State Setting 2ϕ + 3ϕ, 2ϕ + 4ϕ, 3ϕ + 4ϕ, and 4ϕ + 5ϕ, and When Inserting 1 to 3 Recovery Cycles and Accessing External Area)

Symbol	Parameter	Measuring Condition	Standard		Unit
			Min.	Max.	
$t_{d(BCLK-AD)}$	Address output delay time	See Figure 5.14		25	ns
$t_{h(BCLK-AD)}$	Address output hold time (in relation to BCLK)		0		ns
$t_{h(RD-AD)}$	Address output hold time (in relation to RD)		(Note 4)		ns
$t_{h(WR-AD)}$	Address output hold time (in relation to WR)		(Note 2)		ns
$t_{d(BCLK-CS)}$	Chip select output delay time			25	ns
$t_{h(BCLK-CS)}$	Chip select output hold time (in relation to BCLK)		0		ns
$t_{d(BCLK-ALE)}$	ALE signal output delay time			15	ns
$t_{h(BCLK-ALE)}$	ALE signal output hold time		-4		ns
$t_{d(BCLK-RD)}$	RD signal output delay time			25	ns
$t_{h(BCLK-RD)}$	RD signal output hold time		0		ns
$t_{d(BCLK-WR)}$	WR signal output delay time			25	ns
$t_{h(BCLK-WR)}$	WR signal output hold time		0		ns
$t_{d(BCLK-DB)}$	Data output delay time (in relation to BCLK)			40	ns
$t_{h(BCLK-DB)}$	Data output hold time (in relation to BCLK) (3)		0		ns
$t_{d(DB-WR)}$	Data output delay time (in relation to WR)		(Note 1)		ns
$t_{h(WR-DB)}$	Data output hold time (in relation to WR) (3)		(Note 2)		ns

Notes:

1. Calculated according to the BCLK frequency as follows:

$$\frac{n \times 10^9}{f_{(BCLK)}} - 40[ns]$$

n is 3 for 2ϕ + 3ϕ, 4 for 2ϕ + 4ϕ, 4 for 3ϕ + 4ϕ, and 5 for 4ϕ + 5ϕ.

2. Calculated according to the BCLK frequency as follows:

$$\frac{m \times 10^9}{f_{(BCLK)}} - 10[ns]$$

m is 1 when 1 recovery cycle is inserted, 2 when 2 recovery cycles are inserted, and 3 when 3 recovery cycles are inserted.

3. This standard value shows the timing when the output is off, and does not show hold time of data bus.
Hold time of data bus varies with capacitor volume and pull-up (pull-down) resistance value.
Hold time of data bus is expressed in
$t = -CR \times \ln(1 - V_{OL}/V_{CC2})$
by a circuit of the right figure.
For example, when $V_{OL} = 0.2V_{CC2}$, C = 30 pF, R = 1 kΩ, hold time of output low level is
$t = -30\text{ pF} \times 1\text{ k}\Omega \times \ln(1 - 0.2V_{CC2}/V_{CC2})$
= 6.7 ns.

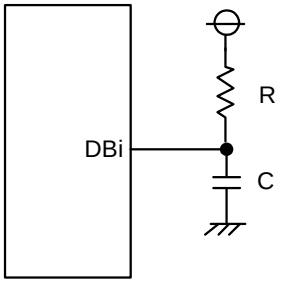

4. Calculated according to the BCLK frequency as follows:

$$\frac{m \times 10^9}{f_{(BCLK)}} + 0[ns]$$

m is 1 when 1 recovery cycle is inserted, 2 when 2 recovery cycles are inserted, and 3 when 3 recovery cycles are inserted.

Downloaded from Arrow.com.

Memory Expansion Mode and Microprocessor Mode
(in wait state setting 2 ϕ + 3 ϕ, 2 ϕ + 4 ϕ, 3ϕ + 4 ϕ, and 4 ϕ + 5 ϕ, and when inserting 1 to 3 recovery cycles and accessing external area)

$V_{CC1} = V_{CC2} = 5V$

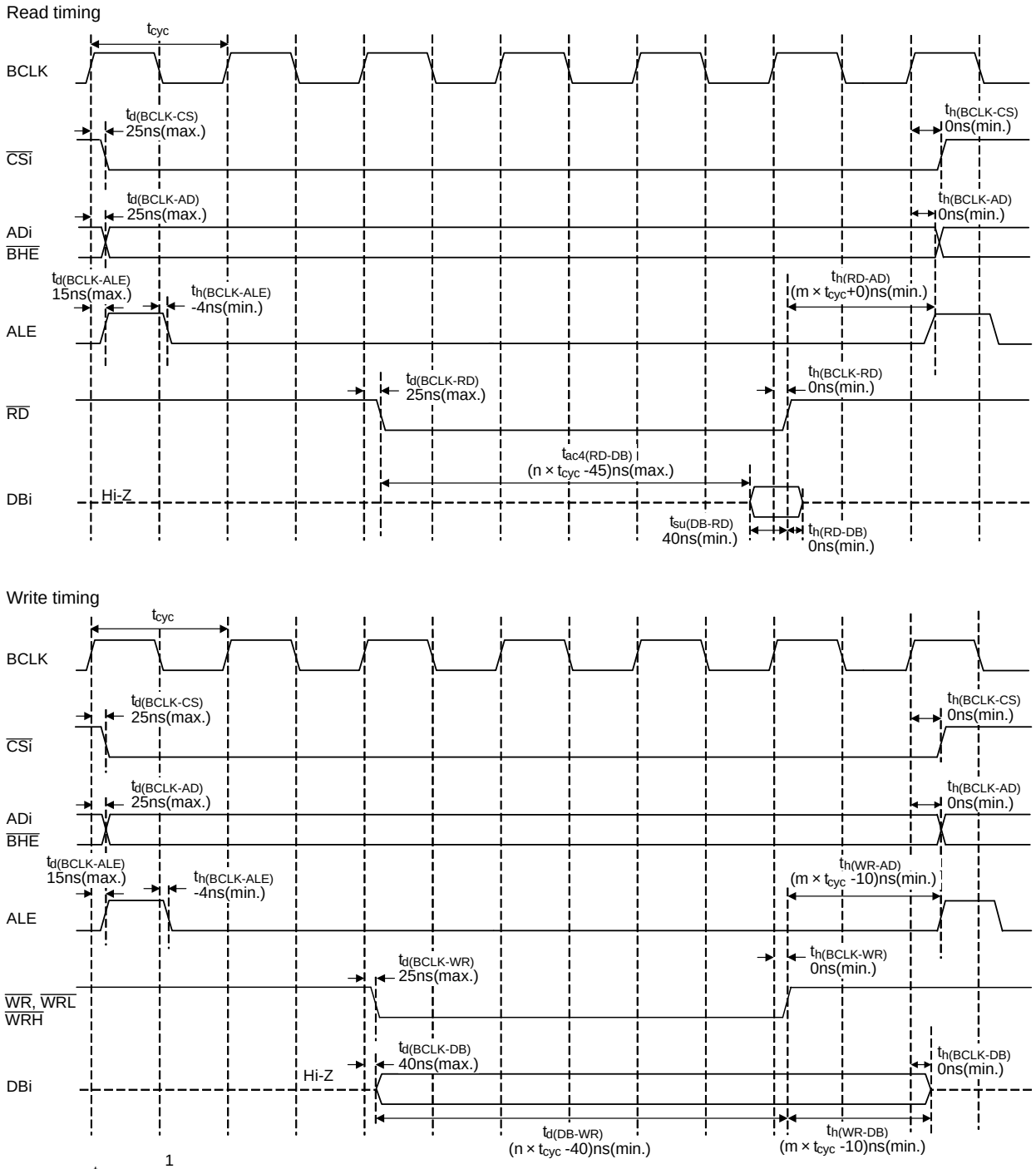

$$t_{cyc} = \frac{1}{f(BCLK)}$$

Measuring conditions

- $V_{CC1} = V_{CC2} = 5V$
- Input timing voltage: $V_{IL} = 0.8$ V, $V_{IH} = 2.0$ V
- Output timing voltage: $V_{OL} = 0.4$ V, $V_{OH} = 2.4$ V

n: 3 (when 2 ϕ + 3 ϕ)
4 (when 2 ϕ + 4 ϕ or 3 ϕ + 4 ϕ)
5 (when 4 ϕ + 5 ϕ)

m: 1 (when 1 recovery cycle inserted)
2 (when 2 recovery cycles inserted)
3 (when 3 recovery cycles inserted)

Figure 5.19 Timing Diagram

Downloaded from Arrow.com.

5.3 Electrical Characteristics (V_{CC1} = V_{CC2} = 3 V)

5.3.1 Electrical Characteristics

VCC1 = VCC2 = 3 V

Table 5.43 Electrical Characteristics (1) [1]

V_{CC1} = V_{CC2} = 2.7 to 3.3 V, V_{SS} = 0 V at T_{opr} = -20°C to 85°C/-40°C to 85°C, $f_{(BCLK)}$ = 32 MHz unless otherwise specified.

Symbol	Parameter			Measuring Condition	Standard			Unit
					Min.	Typ.	Max.	
V_{OH}	High output voltage	P6_0 to P6_7, P7_2 to P7_7, P8_0 to P8_4, P8_6, P8_7, P9_0 to P9_7, P10_0 to P10_7, P11_0 to P11_7, P14_0, P14_1		I_{OH} = –1 mA	V_{CC1} – 0.5		V_{CC1}	V
		P0_0 to P0_7, P1_0 to P1_7, P2_0 to P2_7, P3_0 to P3_7, P4_0 to P4_7, P5_0 to P5_7, P12_0 to P12_7, P13_0 to P13_7		I_{OH} = –1 mA	V_{CC2} – 0.5		V_{CC2}	
V_{OH}	High output voltage XOUT		HIGH POWER	I_{OH} = –0.1 mA	V_{CC1} – 0.5		V_{CC1}	V
			LOW POWER	I_{OH} = –50 μA	V_{CC1} – 0.5		V_{CC1}	
	High output voltage XCOUT		HIGH POWER	With no load applied		2.6		V
			LOW POWER	With no load applied		2.2		
V_{OL}	Low output voltage	P6_0 to P6_7, P7_0 to P7_7, P8_0 to P8_7, P9_0 to P9_7, P10_0 to P10_7, P11_0 to P11_7, P14_0, P14_1		I_{OL} = 1 mA			0.5	V
		P0_0 to P0_7, P1_0 to P1_7, P2_0 to P2_7, P3_0 to P3_7, P4_0 to P4_7, P5_0 to P5_7, P12_0 to P12_7, P13_0 to P13_7		I_{OL} = 1 mA			0.5	
		CEC		I_{OL} = 1 mA		0	0.5	V
V_{OL}	Low output voltage XOUT		HIGH POWER	I_{OL} = 0.1 mA			0.5	V
			LOW POWER	I_{OL} = 50 μA			0.5	
	Low output voltage XCOUT		HIGH POWER	With no load applied		0		V
			LOW POWER	With no load applied		0		
V_{T+}-V_{T-}	Hysteresis	$\overline{HOLD}$, $\overline{RDY}$, TA0IN to TA4IN, TB0IN to TB5IN, $\overline{INT0}$ to $\overline{INT7}$, $\overline{NMI}$, $\overline{ADTRG}$, $\overline{CTS0}$ to $\overline{CTS2}$, $\overline{CTS5}$ to $\overline{CTS7}$, SCL0 to SCL2, SCL5 to SCL7, SDA0 to SDA2, SDA5 to SDA7, CLK0 to CLK7, TA0OUT to TA4OUT, $\overline{KI0}$ to $\overline{KI3}$, RXD0 to RXD2, RXD5 to RXD7, SIN3, SIN4, $\overline{SD}$, PMC0, PMC1, SCLMM, SDAMM, ZP, IDU, IDV, IDW			0.2		1.0	V
		CEC			0.2	0.5	1.0	V
		$\overline{RESET}$			0.2		1.8	V
I_{IH}	High input current	P0_0 to P0_7, P1_0 to P1_7, P2_0 to P2_7, P3_0 to P3_7, P4_0 to P4_7, P5_0 to P5_7, P6_0 to P6_7, P7_0 to P7_7, P8_0 to P8_7, P9_0 to P9_7, P10_0 to P10_7, P11_0 to P11_7, P12_0 to P12_7, P13_0 to P13_7, P14_0, P14_1 XIN, $\overline{RESET}$, CNVSS, BYTE		V_I = 3 V			4.0	μA
–	Leakage current in powered-off state		CEC	V_{CC1} = 0 V			1.8	μA
I_{IL}	Low input current	P0_0 to P0_7, P1_0 to P1_7, P2_0 to P2_7, P3_0 to P3_7, P4_0 to P4_7, P5_0 to P5_7, P6_0 to P6_7, P7_0 to P7_7, P8_0 to P8_7, P9_0 to P9_7, P10_0 to P10_7, P11_0 to P11_7, P12_0 to P12_7, P13_0 to P13_7, P14_0, P14_1 XIN, $\overline{RESET}$, CNVSS, BYTE		V_I = 0 V			–4.0	μA
R_{PULLUP}	Pull-up resistance	P0_0 to P0_7, P1_0 to P1_7, P2_0 to P2_7, P3_0 to P3_7, P4_0 to P4_7, P5_0 to P5_7, P6_0 to P6_7, P7_2 to P7_7, P8_0 to P8_4, P8_6, P8_7, P9_0 to P9_7, P10_0 to P10_7, P11_0 to P11_7, P12_0 to P12_7, P13_0 to P13_7, P14_0, P14_1		V_I = 0 V	50	80	150	kΩ
R_{fXIN}	Feedback resistance XIN					3.0		MΩ
V_{RAM}	RAM retention voltage			In stop mode	1.8			V

Note:

1. When $V_{CC1} \neq V_{CC2}$, refer to 5 V or 3 V standard depending on the voltage.

Downloaded from Arrow.com.

$V_{CC1} = V_{CC2} = 3$ V

Table 5.44 Electrical Characteristics (2)

R5F36506NFA, R5F36506NFB, R5F36506DFA, R5F36506DFB, R5F3650ENFA, R5F3650ENFB, R5F3650EDFA, R5F3650EDFB

$V_{CC1} = V_{CC2} = 2.7$ to 3.3 V, $V_{SS} = 0$ V at $T_{opr} = -20°C$ to 85°C/–40°C to 85°C, $f_{(BCLK)} = 32$ MHz unless otherwise specified.

Symbol	Parameter	Measuring Condition		Standard			Unit
				Min.	Typ.	Max.	
R_{fXCIN}	Feedback resistance XCIN				16		MΩ
I_{CC}	Power supply current In single-chip, mode, the output pin are open and other pins are V_{SS}	High-speed mode	$f_{(BCLK)} = 32$ MHz XIN = 4 MHz (square wave), PLL multiplied by 8 125 kHz on-chip oscillator stopped		24.0		mA
			$f_{(BCLK)} = 32$ MHz, A/D conversion XIN = 4 MHz (square wave), PLL multiplied by 8 125 kHz on-chip oscillator stopped		24.7		mA
			$f_{(BCLK)} = 20$ MHz XIN = 20 MHz (square wave) 125 kHz on-chip oscillator stopped		16.0		mA
		40 MHz on-chip oscillator mode	Main clock stopped 40 MHz on-chip oscillator on, divide-by-4 ($f_{(BCLK)} = 10$ MHz) 125 kHz on-chip oscillator stopped		17.0		mA
		125 kHz on-chip oscillator mode	Main clock stopped 40 MHz on-chip oscillator stopped 125 kHz on-chip oscillator on, no division FMR22 = 1 (slow read mode)		450.0		μA
		Low-power mode	$f_{(BCLK)} = 32$ MHz In low-power mode FMR 22 = FMR23 = 1 On flash memory (1)		160.0		μA
			$f_{(BCLK)} = 32$ MHz In low-power mode On RAM (1)		40.0		μA
		Wait mode	Main clock stopped 40 MHz on-chip oscillator stopped 125 kHz on-chip oscillator on Peripheral clock operating $T_{opr} = 25°C$		20.0		μA
			$f_{(BCLK)} = 32$ MHz (oscillation capacity High) 40 MHz on-chip oscillator stopped 125 kHz on-chip oscillator stopped Peripheral clock operating $T_{opr} = 25°C$		8.0		μA
			$f_{(BCLK)} = 32$ kHz (oscillation capacity Low) 40 MHz on-chip oscillator stopped 125 kHz on-chip oscillator stopped Peripheral clock operating $T_{opr} = 25°C$		4.0		μA
		Stop mode	Main clock stopped 40 MHz on-chip oscillator stopped 125 kHz on-chip oscillator stopped Peripheral clock stopped $T_{opr} = 25°C$		1.6		μA
		During flash memory program	$f_{(BCLK)} = 10$ MHz, PM17 = 1 (one wait) $V_{CC1} = 3.0$ V		20.0		mA
		During flash memory erase	$f_{(BCLK)} = 10$ MHz, PM17 = 1 (one wait) $V_{CC1} = 3.0$ V		30.0		mA

Note:
1. This indicates the memory in which the program to be executed exists.

Downloaded from Arrow.com.

$V_{CC1} = V_{CC2} = 3$ V

Table 5.45 Electrical Characteristics (3)

R5F3651ENFC, R5F3651EDFC, R5F3651KNFC, R5F3650KNFA, R5F3650KNFB, R5F3651KDFC, R5F3650KDFA, R5F3650KDFB, R5F3651MNFC, R5F3650MNFA, R5F3650MNFB, R5F3651MDFC, R5F3650MDFA, R5F3650MDFB, R5F3651NNFC, R5F3650NNFA, R5F3650NNFB, R5F3651NDFC, R5F3650NDFA, R5F3650NDFB

$V_{CC1} = V_{CC2} = 2.7$ to 3.3 V, $V_{SS} = 0$ V at $T_{opr} = -20°C$ to 85°C/–40°C to 85°C, $f_{(BCLK)}$ = 32 MHz unless otherwise specified.

Symbol	Parameter	Measuring Condition		Standard			Unit
				Min.	Typ.	Max.	
R_{fXCIN}	Feedback resistance XCIN				16		MΩ
I_{CC}	Power supply current In single-chip, mode, the output pin are open and other pins are V_{SS}	High-speed mode	$f_{(BCLK)}$ = 32 MHz XIN = 4 MHz (square wave), PLL multiplied by 8 125 kHz on-chip oscillator stopped		26.0		mA
			$f_{(BCLK)}$ = 32 MHz, A/D conversion XIN = 4 MHz (square wave), PLL multiplied by 8 125 kHz on-chip oscillator stopped		27.0		mA
			$f_{(BCLK)}$ = 20 MHz XIN = 20 MHz (square wave) 125 kHz on-chip oscillator stopped		17.0		mA
		40 MHz on-chip oscillator mode	Main clock stopped 40 MHz on-chip oscillator on, divide-by-4 (f(BCLK) = 10 MHz) 125 kHz on-chip oscillator stopped		18.0		mA
		125 kHz on-chip oscillator mode	Main clock stopped 40 MHz on-chip oscillator stopped 125 kHz on-chip oscillator on, no division FMR22 = 1 (slow read mode)		500.0		μA
		Low-power mode	$f_{(BCLK)}$ = 32 MHz In low-power mode, FMR 22 = FMR23 = 1 on flash memory (1)		170.0		μA
			$f_{(BCLK)}$ = 32 MHz In low-power mode, on RAM (1)		40.0		μA
		Wait mode	Main clock stopped 40 MHz on-chip oscillator stopped 125 kHz on-chip oscillator on Peripheral clock operating T_{opr} = 25°C		20.0		μA
			$f_{(BCLK)}$ = 32 MHz (oscillation capacity High) 40 MHz on-chip oscillator stopped 125 kHz on-chip oscillator stopped Peripheral clock operating T_{opr} = 25°C		8.0		μA
			$f_{(BCLK)}$ = 32 kHz (oscillation capacity Low) 40 MHz on-chip oscillator stopped 125 kHz on-chip oscillator stopped Peripheral clock operating T_{opr} = 25°C		4.0		μA
		Stop mode	Main clock stopped 40 MHz on-chip oscillator stopped 125 kHz on-chip oscillator stopped Peripheral clock stopped T_{opr} = 25°C		1.6		μA
		During flash memory program	$f_{(BCLK)}$ = 10 MHz, PM17 = 1 (one wait) V_{CC1} = 3.0 V		20.0		mA
		During flash memory erase	$f_{(BCLK)}$ = 10 MHz, PM17 = 1 (one wait) V_{CC1} = 3.0 V		30.0		mA

Note:
1. This indicates the memory in which the program to be executed exists.

Downloaded from Arrow.com.

$V_{CC1} = V_{CC2} = 3$ V

Table 5.46 Electrical Characteristics (4)

R5F3651RNFC, R5F3650RNFA, R5F3650RNFB, R5F3651RDFC, R5F3650RDFA, R5F3650RDFB, R5F3651TNFC, R5F3650TNFA, R5F3650TNFB, R5F3651TDFC, R5F3650TDFA, R5F3650TDFB

$V_{CC1} = V_{CC2} = 2.7$ to 3.3 V, $V_{SS} = 0$ V at $T_{opr} = -20°C$ to 85°C/–40°C to 85°C, $f_{(BCLK)}$ = 32 MHz unless otherwise specified.

Symbol	Parameter	Measuring Condition		Standard			Unit
				Min.	Typ.	Max.	
R_{fXCIN}	Feedback resistance XCIN				25		MΩ
I_{CC}	Power supply current In single-chip, mode, the output pin are open and other pins are V_{SS}	High-speed mode	$f_{(BCLK)}$ = 32 MHz XIN = 4 MHz (square wave), PLL multiplied by 8 125 kHz on-chip oscillator stopped		32.0		mA
			$f_{(BCLK)}$ = 32 MHz, A/D conversion XIN = 4 MHz (square wave), PLL multiplied by 8 125 kHz on-chip oscillator stopped		32.7		mA
			$f_{(BCLK)}$ = 20 MHz XIN = 20 MHz (square wave) 125 kHz on-chip oscillator stopped		21.0		mA
		40 MHz on-chip oscillator mode	Main clock stopped 40 MHz on-chip oscillator on, divide-by-4 (f(BCLK) = 10 MHz) 125 kHz on-chip oscillator stopped		23.0		mA
		125 kHz on-chip oscillator mode	Main clock stopped 40 MHz on-chip oscillator stopped 125 kHz on-chip oscillator on, no division FMR22 = 1 (slow read mode)		750.0		μA
		Low-power mode	$f_{(BCLK)}$ = 32 MHz In low-power mode, FMR 22 = FMR23 = 1 on flash memory (1)		300.0		μA
			$f_{(BCLK)}$ = 32 MHz In low-power mode, on RAM (1)		40.0		μA
		Wait mode	Main clock stopped 40 MHz on-chip oscillator stopped 125 kHz on-chip oscillator on Peripheral clock operating T_{opr} = 25°C		20.0		μA
			$f_{(BCLK)}$ = 32 MHz (oscillation capacity High) 40 MHz on-chip oscillator stopped 125 kHz on-chip oscillator stopped Peripheral clock operating T_{opr} = 25°C		8.0		μA
			$f_{(BCLK)}$ = 32 kHz (oscillation capacity Low) 40 MHz on-chip oscillator stopped 125 kHz on-chip oscillator stopped Peripheral clock operating T_{opr} = 25°C		4.0		μA
		Stop mode	Main clock stopped 40 MHz on-chip oscillator stopped 125 kHz on-chip oscillator stopped Peripheral clock stopped T_{opr} = 25°C		1.6		μA
		During flash memory program	$f_{(BCLK)}$ = 10 MHz, PM17 = 1 (one wait) V_{CC1} = 3.0 V		20.0		mA
		During flash memory erase	$f_{(BCLK)}$ = 10 MHz, PM17 = 1 (one wait) V_{CC1} = 3.0 V		30.0		mA

Note:
1. This indicates the memory in which the program to be executed exists.

Downloaded from Arrow.com.

$V_{CC1} = V_{CC2} = 3$ V

5.3.2 Timing Requirements (Peripheral Functions and Others)

($V_{CC1} = V_{CC2} = 3$ V, $V_{SS} = 0$ V, at T_{opr} = -20°C to 85°C/-40°C to 85°C unless otherwise specified)

5.3.2.1 Reset Input ($\overline{\text{RESET}}$ Input)

Table 5.47 Reset Input ($\overline{\text{RESET}}$ Input)

Symbol	Parameter	Standard		Unit
		Min.	Max.	
$t_{w(RSTL)}$	$\overline{\text{RESET}}$ input low pulse width	10		µs

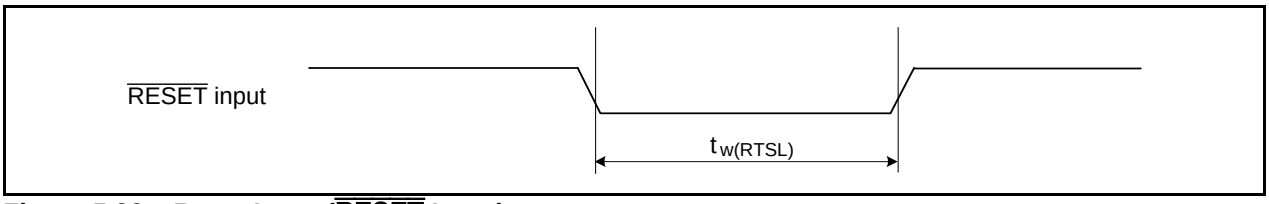

Figure 5.20 Reset Input ($\overline{\text{RESET}}$ Input)

5.3.2.2 External Clock Input

Table 5.48 External Clock Input (XIN Input) (1)

Symbol	Parameter	Standard		Unit
		Min.	Max.	
t_c	External clock input cycle time	50		ns
$t_{w(H)}$	External clock input high pulse width	20		ns
$t_{w(L)}$	External clock input low pulse width	20		ns
t_r	External clock rise time		9	ns
t_f	External clock fall time		9	ns

Note:
1. The condition is $V_{CC1} = V_{CC2} = 2.7$ to 3.0 V.

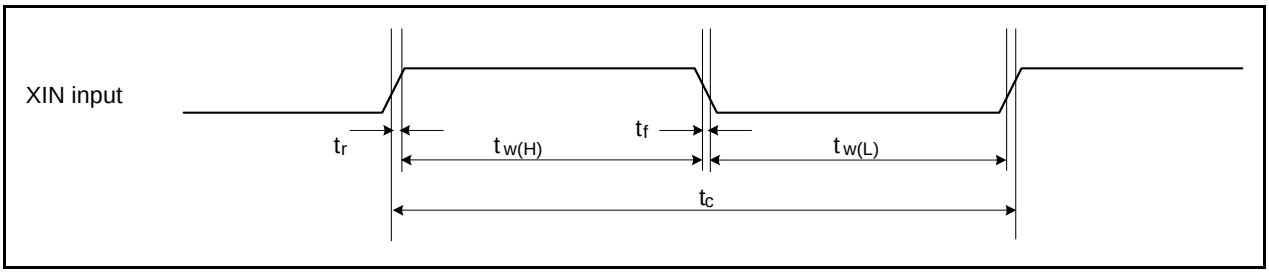

Figure 5.21 External Clock Input (XIN Input)

Downloaded from Arrow.com.

$V_{CC1} = V_{CC2} = 3$ V

Timing Requirements

($V_{CC1} = V_{CC2} = 3$ V, $V_{SS} = 0$ V, at T_{opr} = -20°C to 85°C/-40°C to 85°C unless otherwise specified)

5.3.2.3 Timer A Input

Table 5.49 Timer A Input (Counter Input in Event Counter Mode)

Symbol	Parameter	Standard		Unit
		Min.	Max.	
$t_{c(TA)}$	TAiIN input cycle time	150		ns
$t_{w(TAH)}$	TAiIN input high pulse width	60		ns
$t_{w(TAL)}$	TAiIN input low pulse width	60		ns

Table 5.50 Timer A Input (Gating Input in Timer Mode)

Symbol	Parameter	Standard		Unit
		Min.	Max.	
$t_{c(TA)}$	TAiIN input cycle time	600		ns
$t_{w(TAH)}$	TAiIN input high pulse width	300		ns
$t_{w(TAL)}$	TAiIN input low pulse width	300		ns

Table 5.51 Timer A Input (External Trigger Input in One-Shot Timer Mode)

Symbol	Parameter	Standard		Unit
		Min.	Max.	
$t_{c(TA)}$	TAiIN input cycle time	300		ns
$t_{w(TAH)}$	TAiIN input high pulse width	150		ns
$t_{w(TAL)}$	TAiIN input low pulse width	150		ns

Table 5.52 Timer A Input (External Trigger Input in Pulse Width Modulation Mode and Programmable Output Mode)

Symbol	Parameter	Standard		Unit
		Min.	Max.	
$t_{w(TAH)}$	TAiIN input high pulse width	150		ns
$t_{w(TAL)}$	TAiIN input low pulse width	150		ns

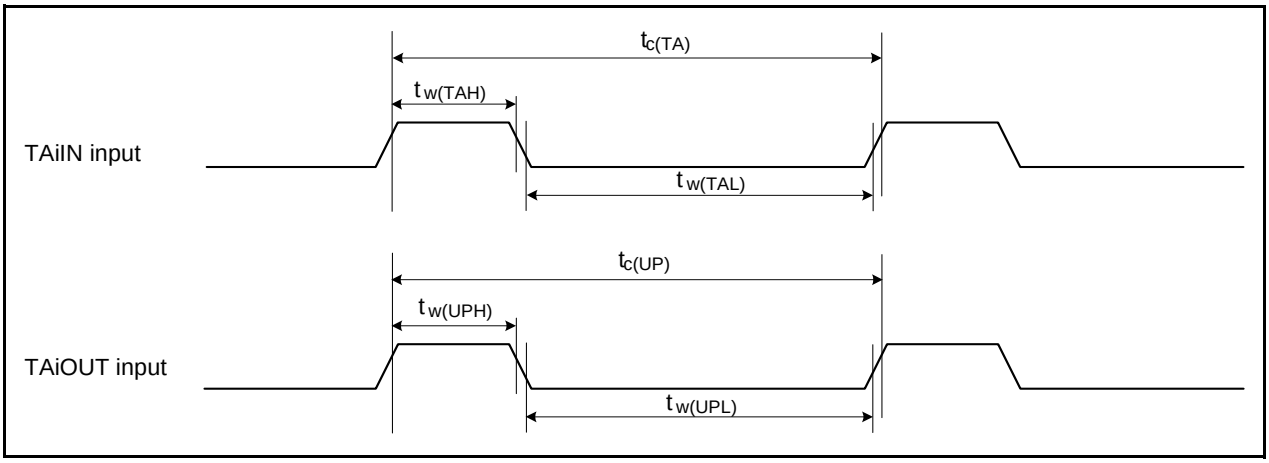

Figure 5.22 Timer A Input

Downloaded from Arrow.com.

$V_{CC1} = V_{CC2} = 3$ V

Timing Requirements

($V_{CC1} = V_{CC2} = 3$ V, $V_{SS} = 0$ V, at T_{opr} = -20°C to 85°C/-40°C to 85°C unless otherwise specified)

Table 5.53 Timer A Input (Two-Phase Pulse Input in Event Counter Mode)

Symbol	Parameter	Standard		Unit
		Min.	Max.	
$t_{c(TA)}$	TAiIN input cycle time	2		µs
$t_{su(TAIN-TAOUT)}$	TAiOUT input setup time	500		ns
$t_{su(TAOUT-TAIN)}$	TAiIN input setup time	500		ns

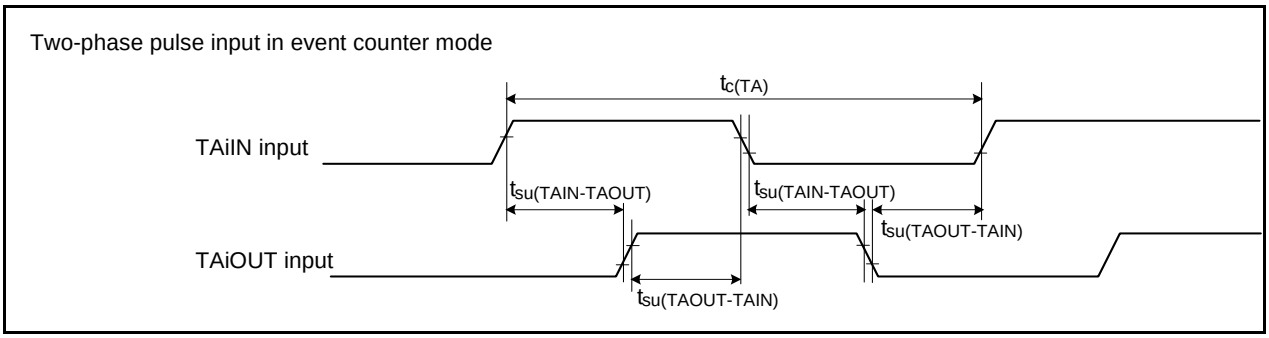

Figure 5.23 Timer A Input (Two-Phase Pulse Input in Event Counter Mode)

Downloaded from Arrow.com.

$V_{CC1} = V_{CC2} = 3$ V

Timing Requirements

($V_{CC1} = V_{CC2} = 3$ V, $V_{SS} = 0$ V, at T_{opr} = -20°C to 85°C/-40°C to 85°C unless otherwise specified)

5.3.2.4 Timer B Input

Table 5.54 Timer B Input (Counter Input in Event Counter Mode)

Symbol	Parameter	Standard		Unit
		Min.	Max.	
$t_{c(TB)}$	TBiIN input cycle time (counted on one edge)	150		ns
$t_{w(TBH)}$	TBiIN input high pulse width (counted on one edge)	60		ns
$t_{w(TBL)}$	TBiIN input low pulse width (counted on one edge)	60		ns
$t_{c(TB)}$	TBiIN input cycle time (counted on both edges)	300		ns
$t_{w(TBH)}$	TBiIN input high pulse width (counted on both edges)	120		ns
$t_{w(TBL)}$	TBiIN input low pulse width (counted on both edges)	120		ns

Table 5.55 Timer B Input (Pulse Period Measurement Mode)

Symbol	Parameter	Standard		Unit
		Min.	Max.	
$t_{c(TB)}$	TBiIN input cycle time	600		ns
$t_{w(TBH)}$	TBiIN input high pulse width	300		ns
$t_{w(TBL)}$	TBiIN input low pulse width	300		ns

Table 5.56 Timer B Input (Pulse Width Measurement Mode)

Symbol	Parameter	Standard		Unit
		Min.	Max.	
$t_{c(TB)}$	TBiIN input cycle time	600		ns
$t_{w(TBH)}$	TBiIN input high pulse width	300		ns
$t_{w(TBL)}$	TBiIN input low pulse width	300		ns

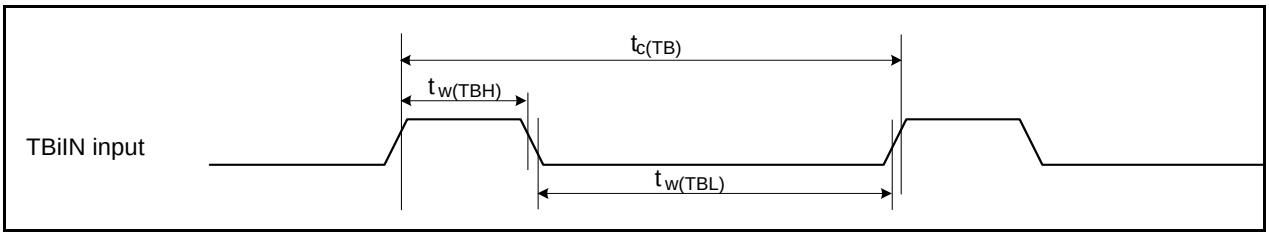

Figure 5.24 Timer B Input

Downloaded from Arrow.com.

$V_{CC1} = V_{CC2} = 3$ V

Timing Requirements

($V_{CC1} = V_{CC2} = 3$ V, $V_{SS} = 0$ V, at T_{opr} = -20°C to 85°C/-40°C to 85°C unless otherwise specified)

5.3.2.5 Serial Interface

Table 5.57 Serial Interface

Symbol	Parameter	Standard		Unit
		Min.	Max.	
$t_{c(CK)}$	CLKi input cycle time	300		ns
$t_{w(CKH)}$	CLKi input high pulse width	150		ns
$t_{w(CKL)}$	CLKi input low pulse width	150		ns
$t_{d(C-Q)}$	TXDi output delay time		160	ns
$t_{h(C-Q)}$	TXDi hold time	0		ns
$t_{su(D-C)}$	RXDi input setup time	100		ns
$t_{h(C-D)}$	RXDi input hold time	90		ns

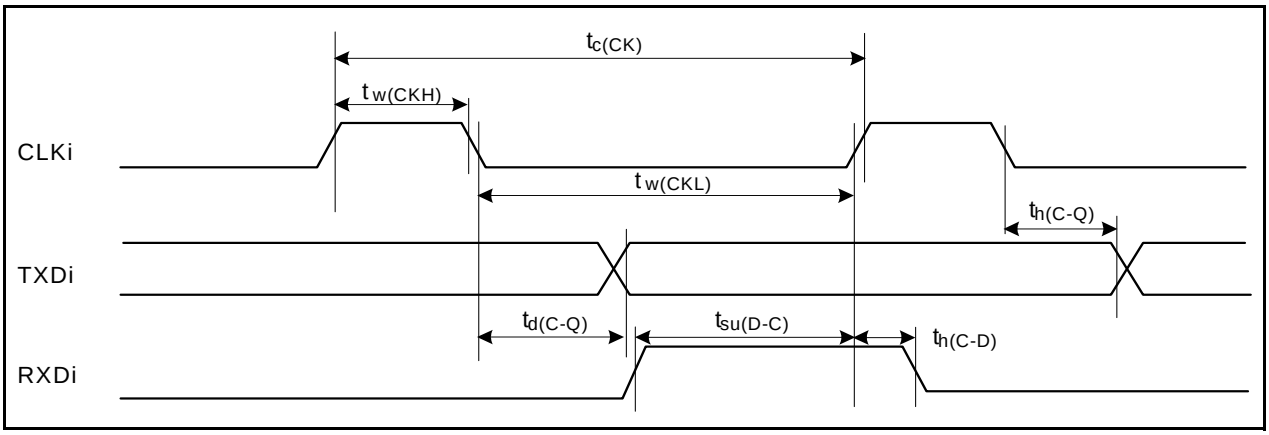

Figure 5.25 Serial Interface

5.3.2.6 External Interrupt $\overline{INTi}$ Input

Table 5.58 External Interrupt $\overline{INTi}$ Input

Symbol	Parameter	Standard		Unit
		Min.	Max.	
$t_{w(INH)}$	$\overline{INTi}$ input high pulse width	380		ns
$t_{w(INL)}$	$\overline{INTi}$ input low pulse width	380		ns

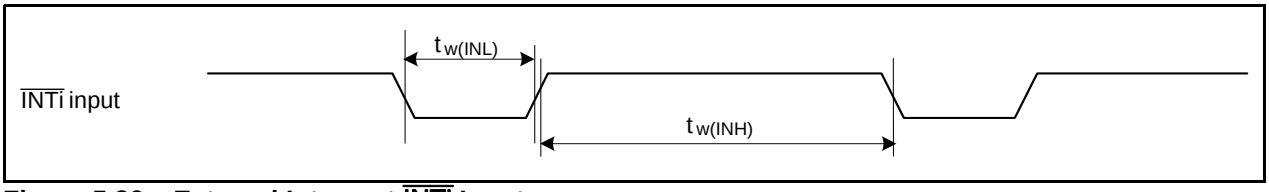

Figure 5.26 External Interrupt $\overline{INTi}$ Input

Downloaded from Arrow.com.

$V_{CC1} = V_{CC2} = 3$ V

Timing Requirements

($V_{CC1} = V_{CC2} = 3$ V, $V_{SS} = 0$ V, at T_{opr} = -20°C to 85°C/-40°C to 85°C unless otherwise specified)

5.3.2.7 Multi-master I²C-bus

Table 5.59 Multi-master I²C-bus

Symbol	Parameter	Standard Clock Mode		Fast-mode		Unit
		Min.	Max.	Min.	Max.	
t_{BUF}	Bus free time	4.7		1.3		µs
$t_{HD;STA}$	Hold time in start condition	4.0		0.6		µs
t_{LOW}	Hold time in SCL clock 0 status	4.7		1.3		µs
t_R	SCL, SDA signals' rising time		1000	20 + 0.1 Cb	300	ns
$t_{HD;DAT}$	Data hold time	0		0	0.9	µs
t_{HIGH}	Hold time in SCL clock 1 status	4.0		0.6		µs
f_F	SCL, SDA signals' falling time		300	20 + 0.1 Cb	300	ns
$t_{su;DAT}$	Data setup time	250		100		ns
$t_{su;STA}$	Setup time in restart condition	4.7		0.6		µs
$t_{su;STO}$	Stop condition setup time	4.0		0.6		µs

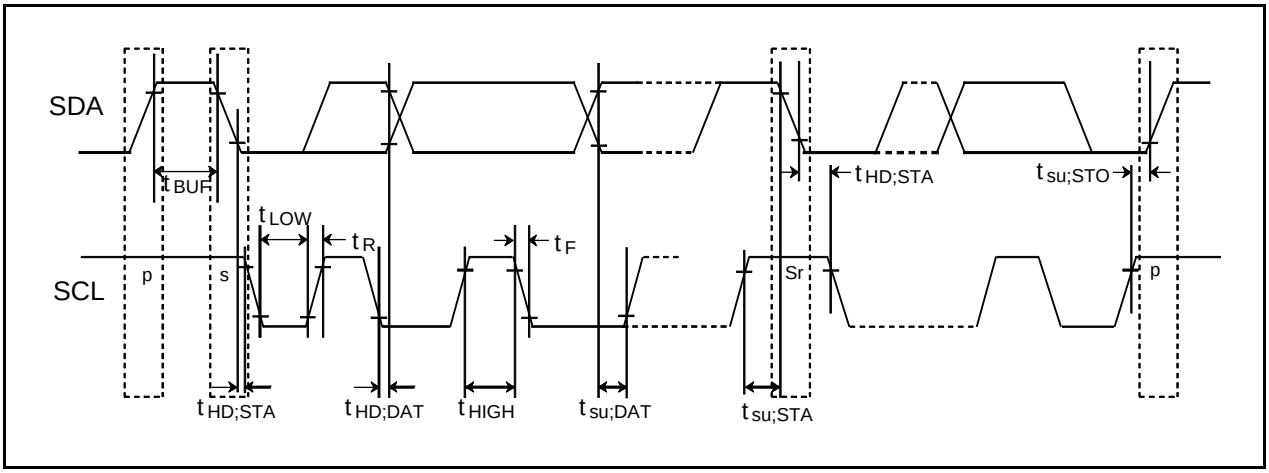

Figure 5.27 Multi-master I²C-bus

Downloaded from Arrow.com.

$V_{CC1} = V_{CC2} = 3$ V

Timing Requirements

($V_{CC1} = V_{CC2} = 3$ V, $V_{SS} = 0$ V, at T_{opr} = -20°C to 85°C/-40°C to 85°C unless otherwise specified)

5.3.3 Timing Requirements (Memory Expansion Mode and Microprocessor Mode)

Table 5.60 Memory Expansion Mode and Microprocessor Mode

Symbol	Parameter	Standard		Unit
		Min.	Max.	
$t_{ac1(RD-DB)}$	Data input access time (for setting with no wait)		(Note 1)	ns
$t_{ac2(RD-DB)}$	Data input access time (for setting with wait)		(Note 2)	ns
$t_{ac3(RD-DB)}$	Data input access time (when accessing multiplex bus area)		(Note 3)	ns
$t_{ac4(RD-DB)}$	Data input access time (for setting with 2 ϕ + 3 ϕ or more)		(Note 4)	ns
$t_{su(DB-RD)}$	Data input setup time	50		ns
$t_{su(RDY-BCLK)}$	$\overline{RDY}$ input setup time	85		ns
$t_{h(RD-DB)}$	Data input hold time	0		ns
$t_{h(BCLK-RDY)}$	$\overline{RDY}$ input hold time	0		ns

Notes:

1. Calculated according to the BCLK frequency as follows:

   $$\frac{0.5 \times 10^9}{f_{(BCLK)}} - 60[ns]$$

2. Calculated according to the BCLK frequency as follows:

   $$\frac{(n + 0.5) \times 10^9}{f_{(BCLK)}} - 60[ns]$$ n is 1 for 1 wait setting, 2 for 2 waits setting and 3 for 3 waits setting.

3. Calculated according to the BCLK frequency as follows:

   $$\frac{(n - 0.5) \times 10^9}{f_{(BCLK)}} - 60[ns]$$ n is 2 for 2 waits setting, 3 for 3 waits setting.

4. Calculated according to the BCLK frequency as follows:

   $$\frac{n \times 10^9}{f_{(BCLK)}} - 60[ns]$$ n is 3 for 2 ϕ + 3 ϕ, 4 for 2 ϕ + 4 ϕ, 4 for 3 ϕ + 4 ϕ, 5 for 4 ϕ + 5 ϕ,.

Downloaded from Arrow.com.

Memory Expansion Mode and Microprocessor Mode

$V_{CC1} = V_{CC2} = 3$ V

(Effective in wait state setting)

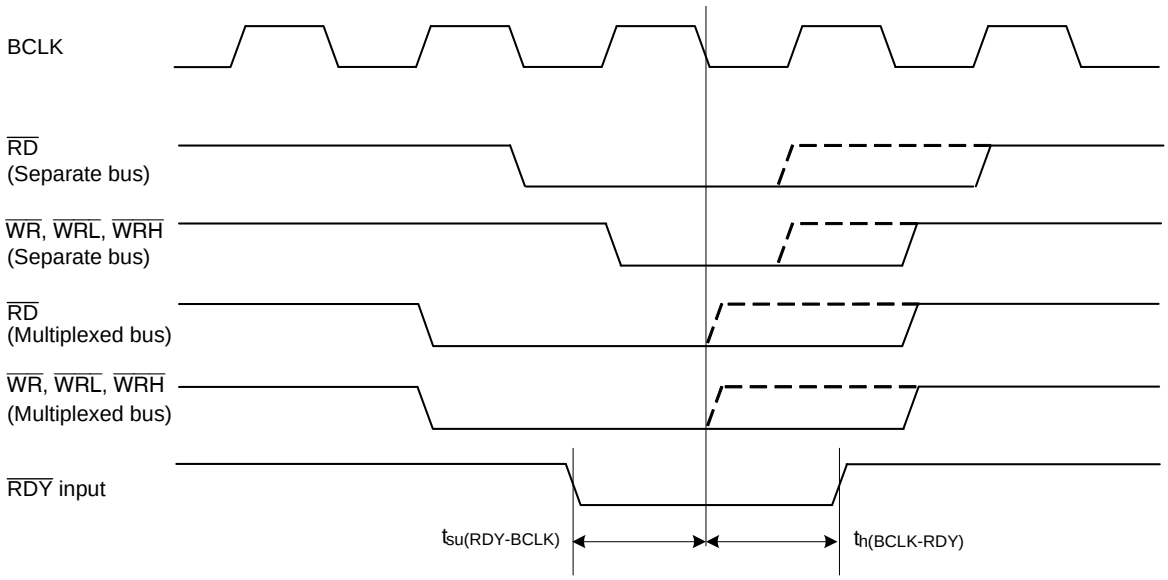

Measuring conditions

- $V_{CC1} = V_{CC2} = 3$ V
- Input timing voltage: $V_{IL} = 0.6$ V, $V_{IH} = 2.4$ V
- Output timing voltage: $V_{OL} = 1.5$ V, $V_{OH} = 1.5$ V

Figure 5.28 Timing Diagram

Downloaded from Arrow.com.

$V_{CC1} = V_{CC2} = 3$ V

5.3.4 Switching Characteristics (Memory Expansion Mode and Microprocessor Mode)

($V_{CC1} = V_{CC2} = 3$ V, $V_{SS} = 0$ V, at T_{opr} = -20°C to 85°C/-40°C to 85°C unless otherwise specified)

5.3.4.1 In No Wait State Setting

Table 5.61 Memory Expansion and Microprocessor Modes (in No Wait State Setting)

Symbol	Parameter	Measuring Condition	Standard		Unit
			Min.	Max.	
$t_{d(BCLK-AD)}$	Address output delay time	See Figure 5.29		30	ns
$t_{h(BCLK-AD)}$	Address output hold time (in relation to BCLK)		0		ns
$t_{h(RD-AD)}$	Address output hold time (in relation to RD)		0		ns
$t_{h(WR-AD)}$	Address output hold time (in relation to WR)		(Note 2)		ns
$t_{d(BCLK-CS)}$	Chip select output delay time			30	ns
$t_{h(BCLK-CS)}$	Chip select output hold time (in relation to BCLK)		0		ns
$t_{d(BCLK-ALE)}$	ALE signal output delay time			25	ns
$t_{h(BCLK-ALE)}$	ALE signal output hold time		–4		ns
$t_{d(BCLK-RD)}$	RD signal output delay time			30	ns
$t_{h(BCLK-RD)}$	RD signal output hold time		0		ns
$t_{d(BCLK-WR)}$	WR signal output delay time			30	ns
$t_{h(BCLK-WR)}$	WR signal output hold time		0		ns
$t_{d(BCLK-DB)}$	Data output delay time (in relation to BCLK)			40	ns
$t_{h(BCLK-DB)}$	Data output hold time (in relation to BCLK) (3)		0		ns
$t_{d(DB-WR)}$	Data output delay time (in relation to WR)		(Note 1)		ns
$t_{h(WR-DB)}$	Data output hold time (in relation to WR) (3)		(Note 2)		ns

Notes:

1. Calculated according to the BCLK frequency as follows:

   $\frac{0.5 \times 10^9}{f_{(BCLK)}} - 40[ns]$ $f_{(BCLK)}$ is 12.5 MHz or less.

2. Calculated according to the BCLK frequency as follows:

   $\frac{0.5 \times 10^9}{f_{(BCLK)}} - 10[ns]$

3. This standard value shows the timing when the output is off, and does not show hold time of data bus.
   Hold time of data bus varies with capacitor volume and pull-up (pull-down) resistance value.
   Hold time of data bus is expressed in
   $t = -CR \times \ln(1 - V_{OL}/V_{CC2})$
   by a circuit of the right figure.
   For example, when $V_{OL} = 0.2V_{CC2}$, C = 30 pF, R = 1 kΩ,
   hold time of output low level is
   $t = -30\ pF \times 1\ k\Omega \times \ln(1 - 0.2V_{CC2}/V_{CC2})$
   = 6.7 ns.

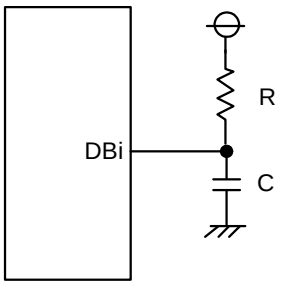

Downloaded from Arrow.com.

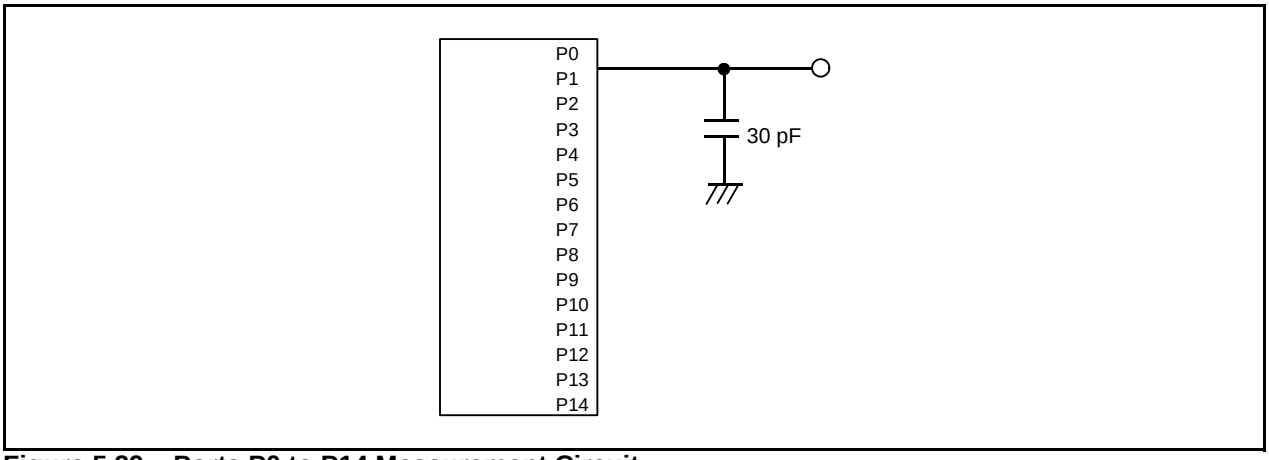

Figure 5.29 Ports P0 to P14 Measurement Circuit

Downloaded from Arrow.com.

Memory Expansion Mode and Microprocessor Mode
(in no wait state setting)

$V_{CC1} = V_{CC2} = 3V$

Read timing

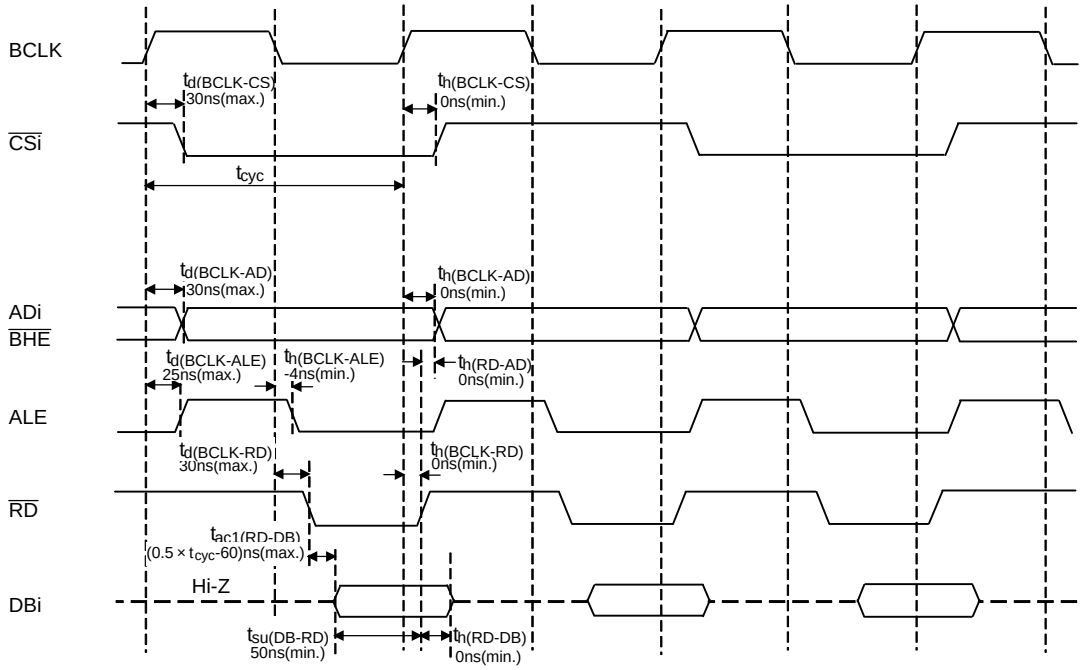

Write timing

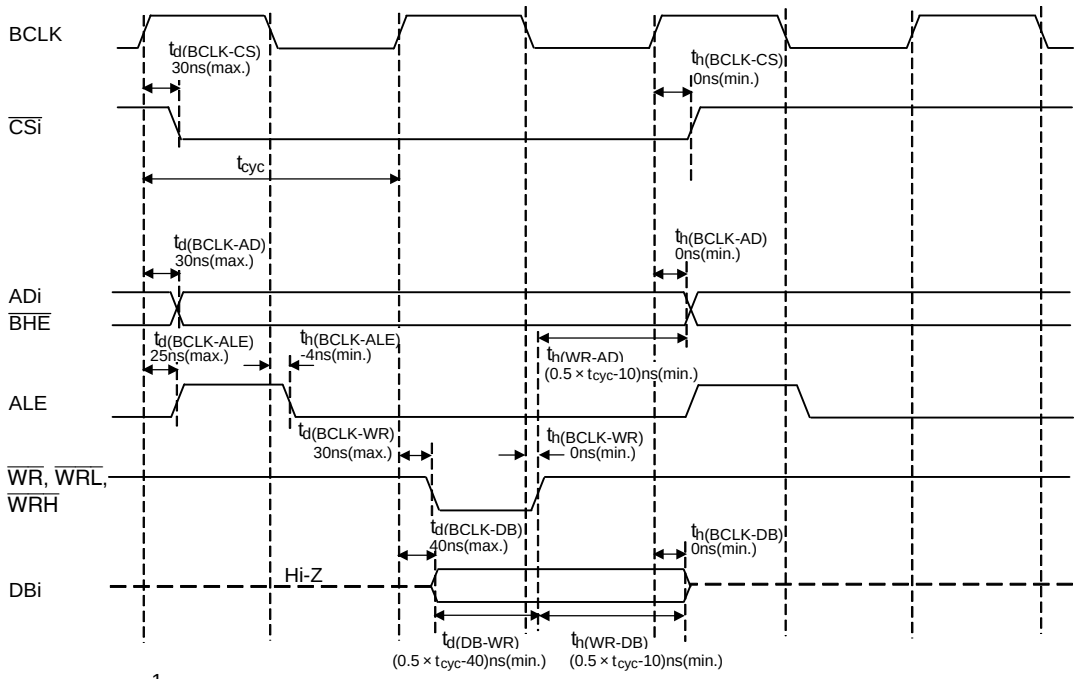

$$t_{cyc} = \frac{1}{f_{(BCLK)}}$$

Measuring conditions

- $V_{CC1} = V_{CC2} = 3V$
- Input timing voltage: $V_{IL} = 0.6$ V, $V_{IH} = 2.4$ V
- Output timing voltage: $V_{OL} = 1.5$ V, $V_{OH} = 1.5$ V

Figure 5.30 Timing Diagram

Downloaded from Arrow.com.

$V_{CC1} = V_{CC2} = 3$ V

Switching Characteristics

($V_{CC1} = V_{CC2} = 3$ V, $V_{SS} = 0$ V, at T_{opr} = -20°C to 85°C/-40°C to 85°C unless otherwise specified)

5.3.4.2 In 1 to 3 Waits Setting and When Accessing External Area

Table 5.62 Memory Expansion Mode and Microprocessor Mode (in 1 to 3 Waits Setting and When Accessing External Area)

Symbol	Parameter	Measuring Condition	Standard		Unit
			Min.	Max.	
$t_{d(BCLK-AD)}$	Address output delay time	See Figure 5.29		30	ns
$t_{h(BCLK-AD)}$	Address output hold time (in relation to BCLK)		0		ns
$t_{h(RD-AD)}$	Address output hold time (in relation to RD)		0		ns
$t_{h(WR-AD)}$	Address output hold time (in relation to WR)		(Note 2)		ns
$t_{d(BCLK-CS)}$	Chip select output delay time			30	ns
$t_{h(BCLK-CS)}$	Chip select output hold time (in relation to BCLK)		0		ns
$t_{d(BCLK-ALE)}$	ALE signal output delay time			25	ns
$t_{h(BCLK-ALE)}$	ALE signal output hold time		-4		ns
$t_{d(BCLK-RD)}$	RD signal output delay time			30	ns
$t_{h(BCLK-RD)}$	RD signal output hold time		0		ns
$t_{d(BCLK-WR)}$	WR signal output delay time			30	ns
$t_{h(BCLK-WR)}$	WR signal output hold time		0		ns
$t_{d(BCLK-DB)}$	Data output delay time (in relation to BCLK)			40	ns
$t_{h(BCLK-DB)}$	Data output hold time (in relation to BCLK) (3)		0		ns
$t_{d(DB-WR)}$	Data output delay time (in relation to WR)		(Note 1)		ns
$t_{h(WR-DB)}$	Data output hold time (in relation to WR) (3)		(Note 2)		ns

Notes:

1. Calculated according to the BCLK frequency as follows:

$$\frac{(n-0.5)\times 10^9}{f_{(BCLK)}} - 40[ns]$$

n is 1 for 1 wait setting, 2 for 2 waits setting and 3 for 3 waits setting.
When n = 1, $f_{(BCLK)}$ is 12.5 MHz or less.

2. Calculated according to the BCLK frequency as follows:

$$\frac{0.5\times 10^9}{f_{(BCLK)}} - 10[ns]$$

3. This standard value shows the timing when the output is off, and does not show hold time of data bus.
Hold time of data bus varies with capacitor volume and pull-up (pull-down) resistance value.
Hold time of data bus is expressed in
$t = -CR \times \ln(1-V_{OL}/V_{CC2})$
by a circuit of the right figure.
For example, when $V_{OL} = 0.2V_{CC2}$, C = 30 pF, R = 1 kΩ, hold time of output low level is
$t = -30\text{ pF} \times 1\text{ k}\Omega \times \ln(1 - 0.2V_{CC2}/V_{CC2})$
= 6.7 ns.

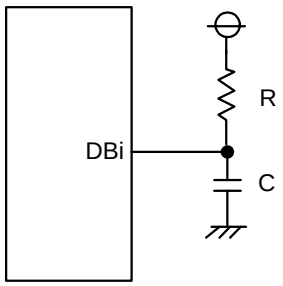

Downloaded from Arrow.com.

Memory Expansion Mode and Microprocessor Mode
(in 1 to 3 waits setting and when accessing external area)

$V_{CC1} = V_{CC2} = 3V$

Read timing

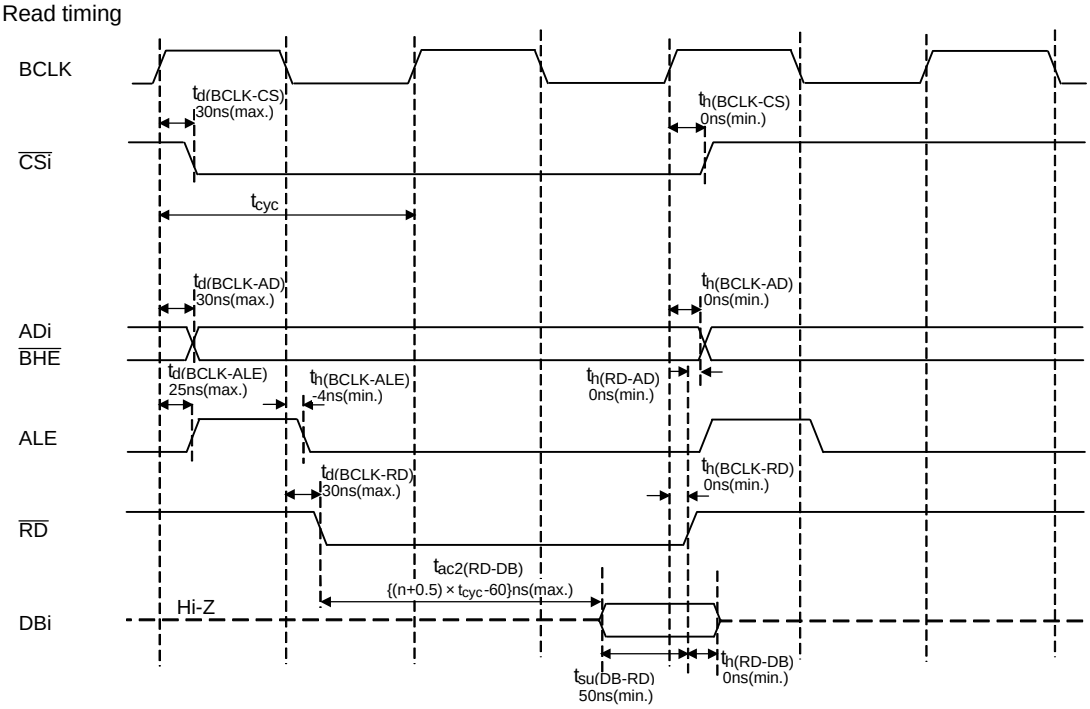

Write timing

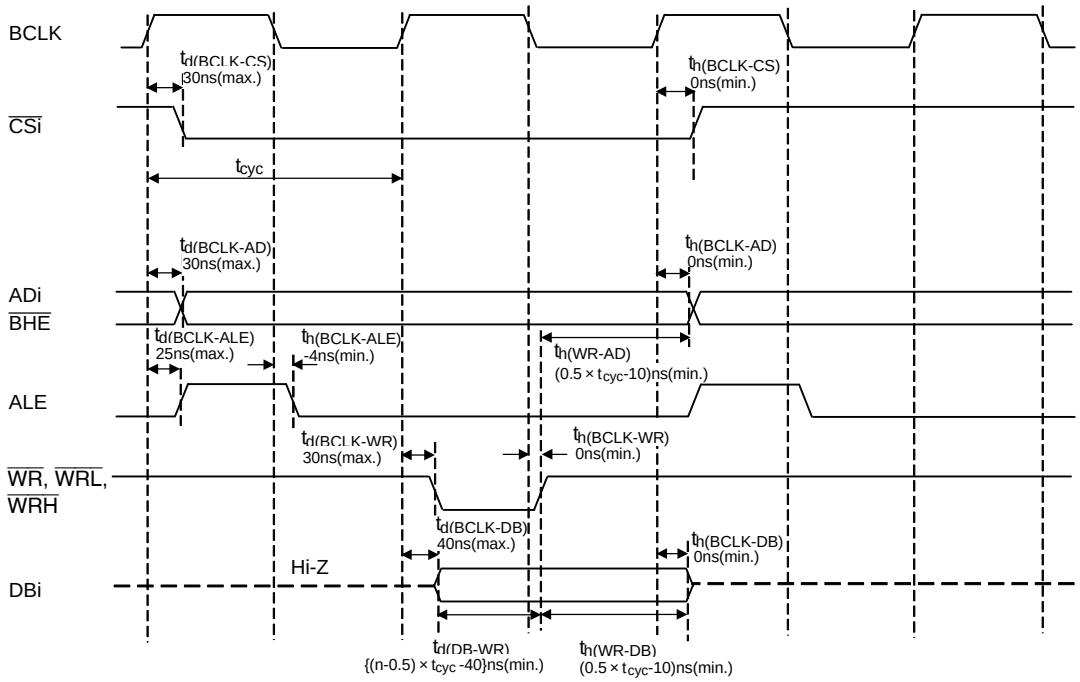

$$t_{cyc} = \frac{1}{f_{(BCLK)}}$$

Measuring conditions

- $V_{CC1} = V_{CC2} = 3V$
- Input timing voltage: $V_{IL} = 0.6$ V, $V_{IH} = 2.4$ V
- Output timing voltage: $V_{OL} = 1.5$ V, $V_{OH} = 1.5$ V

n: 1 (when 1 wait)
2 (when 2 waits)
3 (when 3 waits)

Figure 5.31 Timing Diagram

Downloaded from Arrow.com.

$V_{CC1} = V_{CC2} = 3$ V

Switching Characteristics

($V_{CC1} = V_{CC2} = 3$ V, $V_{SS} = 0$ V, at T_{opr} = -20°C to 85°C/-40°C to 85°C unless otherwise specified)

5.3.4.3 In 2 or 3 Waits Setting, and When Accessing External Area and Using Multiplexed Bus

Table 5.63 Memory Expansion Mode and Microprocessor Mode (in 2 or 3 Waits Setting, and When Accessing External Area and Using Multiplexed Bus) (5)

Symbol	Parameter	Measuring Condition	Standard		Unit
			Min.	Max.	
$t_{d(BCLK-AD)}$	Address output delay time	See Figure 5.29		50	ns
$t_{h(BCLK-AD)}$	Address output hold time (in relation to BCLK)		0		ns
$t_{h(RD-AD)}$	Address output hold time (in relation to RD)		(Note 1)		ns
$t_{h(WR-AD)}$	Address output hold time (in relation to WR)		(Note 1)		ns
$t_{d(BCLK-CS)}$	Chip select output delay time			50	ns
$t_{h(BCLK-CS)}$	Chip select output hold time (in relation to BCLK)		0		ns
$t_{h(RD-CS)}$	Chip select output hold time (in relation to RD)		(Note 1)		ns
$t_{h(WR-CS)}$	Chip select output hold time (in relation to WR)		(Note 1)		ns
$t_{d(BCLK-RD)}$	RD signal output delay time			40	ns
$t_{h(BCLK-RD)}$	RD signal output hold time		0		ns
$t_{d(BCLK-WR)}$	WR signal output delay time			40	ns
$t_{h(BCLK-WR)}$	WR signal output hold time		0		ns
$t_{d(BCLK-DB)}$	Data output delay time (in relation to BCLK)			50	ns
$t_{h(BCLK-DB)}$	Data output hold time (in relation to BCLK)		0		ns
$t_{d(DB-WR)}$	Data output delay time (in relation to WR)		(Note 2)		ns
$t_{h(WR-DB)}$	Data output hold time (in relation to WR)		(Note 1)		ns
$t_{d(BCLK-ALE)}$	ALE signal output delay time (in relation to BCLK)			25	ns
$t_{h(BCLK-ALE)}$	ALE signal output hold time (in relation to BCLK)		–4		ns
$t_{d(AD-ALE)}$	ALE signal output delay time (in relation to Address)		(Note 3)		ns
$t_{h(AD-ALE)}$	ALE signal output hold time (in relation to Address)		(Note 4)		ns
$t_{d(AD-RD)}$	RD signal output delay from the end of address		0		ns
$t_{d(AD-WR)}$	WR signal output delay from the end of address		0		ns
$t_{dz(RD-AD)}$	Address output floating start time			8	ns

Notes:

1. Calculated according to the BCLK frequency as follows: $\frac{0.5 \times 10^9}{f_{(BCLK)}} - 10[ns]$
2. Calculated according to the BCLK frequency as follows:
   $\frac{(n - 0.5) \times 10^9}{f_{(BCLK)}} - 50[ns]$ n is 2 for 2 waits setting, 3 for 3 waits setting.
3. Calculated according to the BCLK frequency as follows: $\frac{0.5 \times 10^9}{f_{(BCLK)}} - 40[ns]$
4. Calculated according to the BCLK frequency as follows: $\frac{0.5 \times 10^9}{f_{(BCLK)}} - 15[ns]$
5. When using multiplexed bus, set $f_{(BCLK)}$ 12.5 MHz or less.

Downloaded from Arrow.com.

Memory Expansion Mode and Microprocessor Mode
(in 2 or 3 waits setting, and when accessing external area and using multiplexed bus)

$V_{CC1} = V_{CC2} = 3V$

Read timing

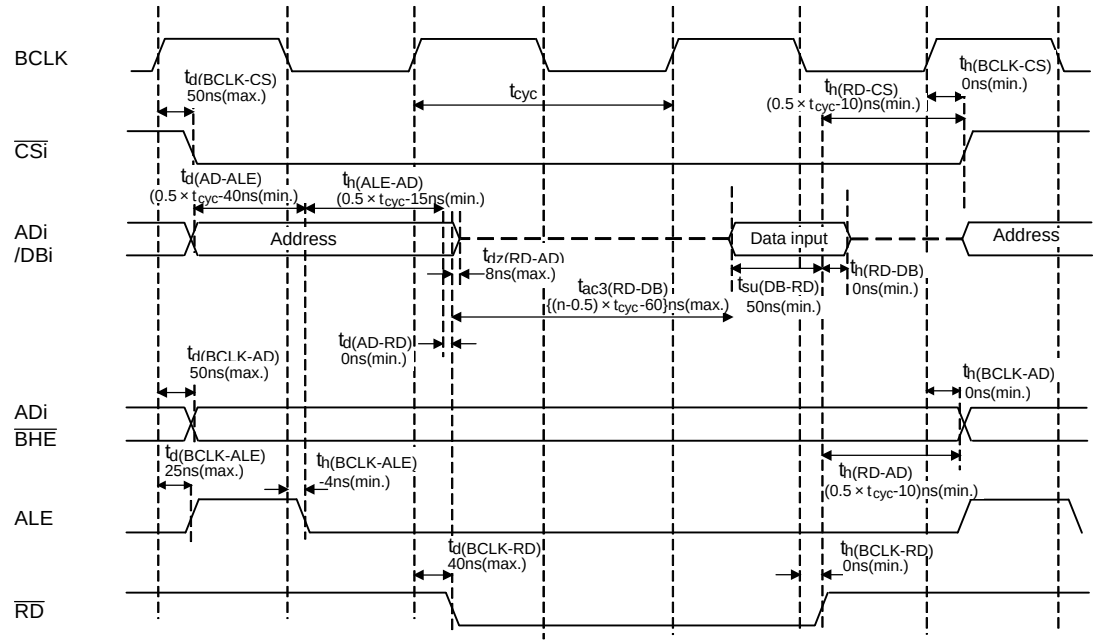

Write timing

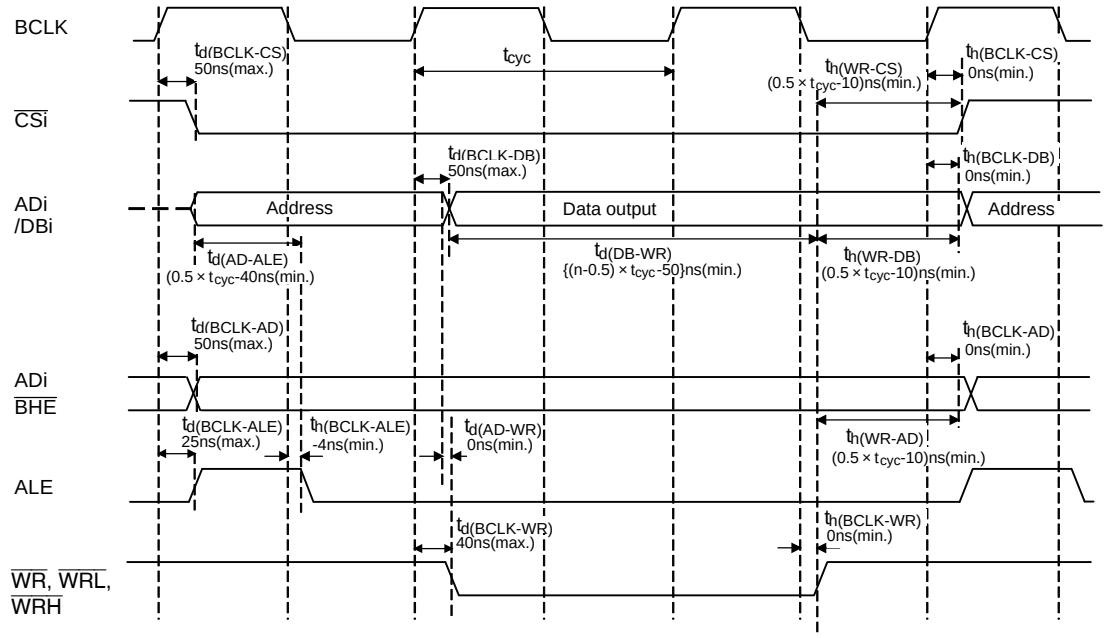

$$t_{cyc} = \frac{1}{f_{(BCLK)}}$$

Measuring conditions

- $V_{CC1} = V_{CC2} = 3V$
- Input timing voltage: $V_{IL} = 0.6$ V, $V_{IH} = 2.4$ V
- Output timing voltage: $V_{OL} = 1.5$ V, $V_{OH} = 1.5$ V

n: 2 (when 2 waits)
3 (when 3 waits)

Figure 5.32 Timing Diagram

Downloaded from Arrow.com.

$V_{CC1} = V_{CC2} = 3$ V

Switching Characteristics

($V_{CC1} = V_{CC2} = 3$ V, $V_{SS} = 0$ V, at T_{opr} = -20°C to 85°C/-40°C to 85°C unless otherwise specified)

5.3.4.4 In Wait State Setting 2ϕ + 3ϕ, 2ϕ + 4ϕ, 3ϕ + 4ϕ, and 4ϕ + 5ϕ, and When Accessing External Area

Table 5.64 Memory Expansion and Microprocessor Modes (in Wait State Setting 2ϕ + 3ϕ, 2ϕ + 4ϕ, 3ϕ + 4ϕ, and 4ϕ + 5ϕ, and When Accessing External Area)

Symbol	Parameter	Measuring Condition	Standard		Unit
			Min.	Max.	
$t_{d(BCLK-AD)}$	Address output delay time	See Figure 5.29		30	ns
$t_{h(BCLK-AD)}$	Address output hold time (in relation to BCLK)		0		ns
$t_{h(RD-AD)}$	Address output hold time (in relation to RD)		0		ns
$t_{h(WR-AD)}$	Address output hold time (in relation to WR)		(Note 2)		ns
$t_{d(BCLK-CS)}$	Chip select output delay time			30	ns
$t_{h(BCLK-CS)}$	Chip select output hold time (in relation to BCLK)		0		ns
$t_{d(BCLK-ALE)}$	ALE signal output delay time			25	ns
$t_{h(BCLK-ALE)}$	ALE signal output hold time		-4		ns
$t_{d(BCLK-RD)}$	RD signal output delay time			30	ns
$t_{h(BCLK-RD)}$	RD signal output hold time		0		ns
$t_{d(BCLK-WR)}$	WR signal output delay time			30	ns
$t_{h(BCLK-WR)}$	WR signal output hold time		0		ns
$t_{d(BCLK-DB)}$	Data output delay time (in relation to BCLK)			40	ns
$t_{h(BCLK-DB)}$	Data output hold time (in relation to BCLK) (3)		0		ns
$t_{d(DB-WR)}$	Data output delay time (in relation to WR)		(Note 1)		ns
$t_{h(WR-DB)}$	Data output hold time (in relation to WR) (3)		(Note 2)		ns

Notes:

1. Calculated according to the BCLK frequency as follows:

$$\frac{(n-0.5)\times 10^9}{f_{(BCLK)}} - 40[ns]$$

n is 3 for 2ϕ + 3ϕ, 4 for 2ϕ + 4ϕ, 4 for 3ϕ + 4ϕ, and 5 for 4ϕ + 5ϕ.

2. Calculated according to the BCLK frequency as follows:

$$\frac{0.5\times 10^9}{f_{(BCLK)}} - 10[ns]$$

3. This standard value shows the timing when the output is off, and does not show hold time of data bus.
Hold time of data bus varies with capacitor volume and pull-up (pull-down) resistance value.
Hold time of data bus is expressed in
$t = -CR \times \ln(1 - V_{OL}/V_{CC2})$
by a circuit of the right figure.
For example, when $V_{OL} = 0.2V_{CC2}$, C = 30 pF, R = 1 kΩ, hold time of output low level is
$t = -30\text{ pF} \times 1\text{ k}\Omega \times \ln(1 - 0.2V_{CC2}/V_{CC2})$
= 6.7 ns.

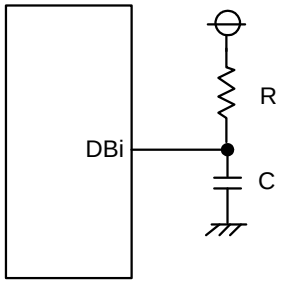

Downloaded from Arrow.com.

Memory Expansion Mode, Microprocessor Mode
(in wait state setting 2 ϕ + 3 ϕ, 2 ϕ + 4 ϕ, 3ϕ + 4 ϕ, and 4 ϕ + 5 ϕ, and when accessing external area)

$V_{CC1} = V_{CC2} = 3V$

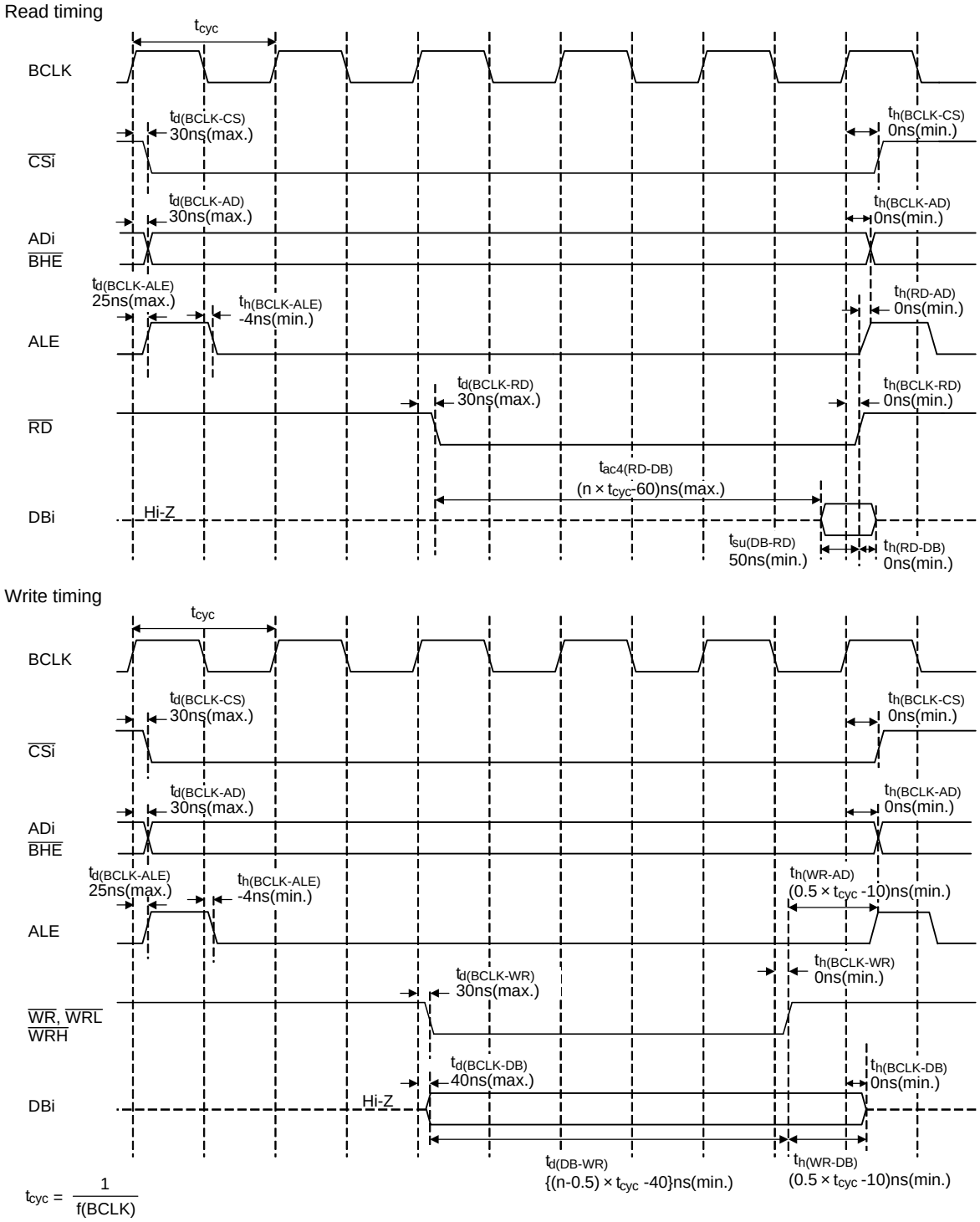

$t_{cyc} = \frac{1}{f(BCLK)}$

Measuring conditions

- $V_{CC1} = V_{CC2} = 3V$
- Input timing voltage: $V_{IL} = 0.6$ V, $V_{IH} = 2.4$ V
- Output timing voltage: $V_{OL} = 1.5$ V, $V_{OH} = 1.5$ V

n: 3 (when 2 ϕ + 3 ϕ)
4 (when 2 ϕ + 4 ϕ or 3 ϕ + 4 ϕ)
5 (when 4 ϕ + 5 ϕ)

Figure 5.33 Timing Diagram

Downloaded from Arrow.com.

$V_{CC1} = V_{CC2} = 3$ V

Switching Characteristics

($V_{CC1} = V_{CC2} = 3$ V, $V_{SS} = 0$ V, at T_{opr} = -20°C to 85°C/-40°C to 85°C unless otherwise specified)

5.3.4.5 In Wait State Setting 2ϕ + 3ϕ, 2ϕ + 4ϕ, 3ϕ + 4ϕ, and 4ϕ + 5ϕ, and Inserting 1 to 3 Recovery Cycles and Accessing External Area

Table 5.65 Memory Expansion Mode and Microprocessor Mode (in Wait State Setting 2ϕ + 3ϕ, 2ϕ + 4ϕ, 3ϕ + 4ϕ, and 4ϕ + 5ϕ, and Inserting 1 to 3 Recovery Cycles and Accessing External Area)

Symbol	Parameter	Measuring Condition	Standard		Unit
			Min.	Max.	
$t_{d(BCLK-AD)}$	Address output delay time	See Figure 5.29		30	ns
$t_{h(BCLK-AD)}$	Address output hold time (in relation to BCLK)		0		ns
$t_{h(RD-AD)}$	Address output hold time (in relation to RD)		(Note 4)		ns
$t_{h(WR-AD)}$	Address output hold time (in relation to WR)		(Note 2)		ns
$t_{d(BCLK-CS)}$	Chip select output delay time			30	ns
$t_{h(BCLK-CS)}$	Chip select output hold time (in relation to BCLK)		0		ns
$t_{d(BCLK-ALE)}$	ALE signal output delay time			25	ns
$t_{h(BCLK-ALE)}$	ALE signal output hold time		-4		ns
$t_{d(BCLK-RD)}$	RD signal output delay time			30	ns
$t_{h(BCLK-RD)}$	RD signal output hold time		0		ns
$t_{d(BCLK-WR)}$	WR signal output delay time			30	ns
$t_{h(BCLK-WR)}$	WR signal output hold time		0		ns
$t_{d(BCLK-DB)}$	Data output delay time (in relation to BCLK)			40	ns
$t_{h(BCLK-DB)}$	Data output hold time (in relation to BCLK) (3)		0		ns
$t_{d(DB-WR)}$	Data output delay time (in relation to WR)		(Note 1)		ns
$t_{h(WR-DB)}$	Data output hold time (in relation to WR) (3)		(Note 2)		ns

Notes:

1. Calculated according to the BCLK frequency as follows:

$$\frac{n \times 10^9}{f_{(BCLK)}} - 40[ns]$$

n is 3 for 2ϕ + 3ϕ, 4 for 2ϕ + 4ϕ, 4 for 3ϕ + 4ϕ, and 5 for 4ϕ + 5ϕ.

2. Calculated according to the BCLK frequency as follows:

$$\frac{m \times 10^9}{f_{(BCLK)}} - 10[ns]$$

m is 1 when 1 recovery cycle is inserted, 2 when 2 recovery cycles are inserted, and 3 when 3 recovery cycles are inserted.

3. This standard value shows the timing when the output is off, and does not show hold time of data bus.
Hold time of data bus varies with capacitor volume and pull-up (pull-down) resistance value.
Hold time of data bus is expressed in
$t = -CR \times \ln(1 - V_{OL}/V_{CC2})$
by a circuit of the right figure.
For example, when $V_{OL} = 0.2V_{CC2}$, C = 30 pF, R = 1 kΩ, hold time of output low level is
$t = -30\text{ pF} \times 1\text{ k}\Omega \times \ln(1 - 0.2V_{CC2}/V_{CC2})$
= 6.7 ns.

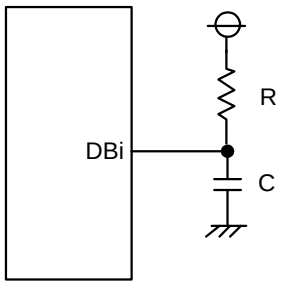

4. Calculated according to the BCLK frequency as follows:

$$\frac{m \times 10^9}{f_{(BCLK)}} + 0[ns]$$

m is 1 when 1 recovery cycle is inserted, 2 when 2 recovery cycles are inserted, and 3 when 3 recovery cycles are inserted.

Downloaded from Arrow.com.

Memory Expansion Mode and Microprocessor Mode
(in wait state setting 2 ϕ + 3 ϕ, 2 ϕ + 4 ϕ, 3ϕ + 4 ϕ, and 4 ϕ + 5 ϕ, and
when inserting 1 to 3 recovery cycles inserted and accessing external area)

$V_{CC1} = V_{CC2} = 3V$

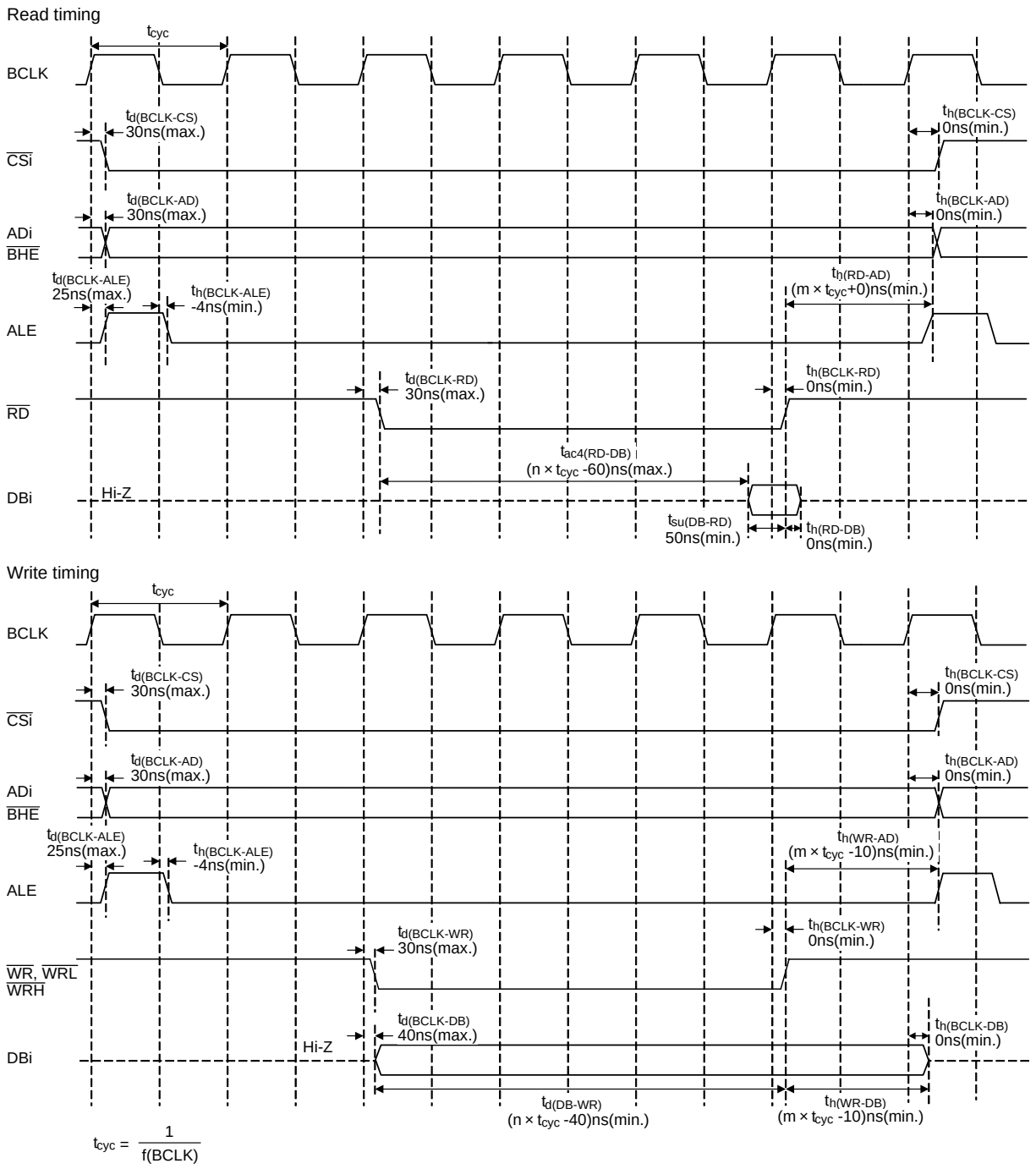

$$t_{cyc} = \frac{1}{f(BCLK)}$$

Measuring conditions

- $V_{CC1} = V_{CC2} = 3V$
- Input timing voltage: $V_{IL} = 0.6$ V, $V_{IH} = 2.4$ V
- Output timing voltage: $V_{OL} = 1.5$ V, $V_{OH} = 1.5$ V

n: 3 (when 2 ϕ + 3 ϕ)
4 (when 2 ϕ + 4 ϕ or 3 ϕ + 4 ϕ)
5 (when 4 ϕ + 5 ϕ)

m: 1 (when 1 recovery cycle inserted)
2 (when 2 recovery cycles inserted)
3 (when 3 recovery cycles inserted)

Figure 5.34 Timing Diagram

Downloaded from Arrow.com.

Appendix 1. Package Dimensions

The information on the latest package dimensions or packaging may be obtained from “Packages“ on the Renesas Electronics website.

JEITA Package Code	RENESAS Code	Previous Code	MASS[Typ.]
P-LQFP128-14x20-0.50	PLQP0128KB-A	128P6Q-A	0.9g

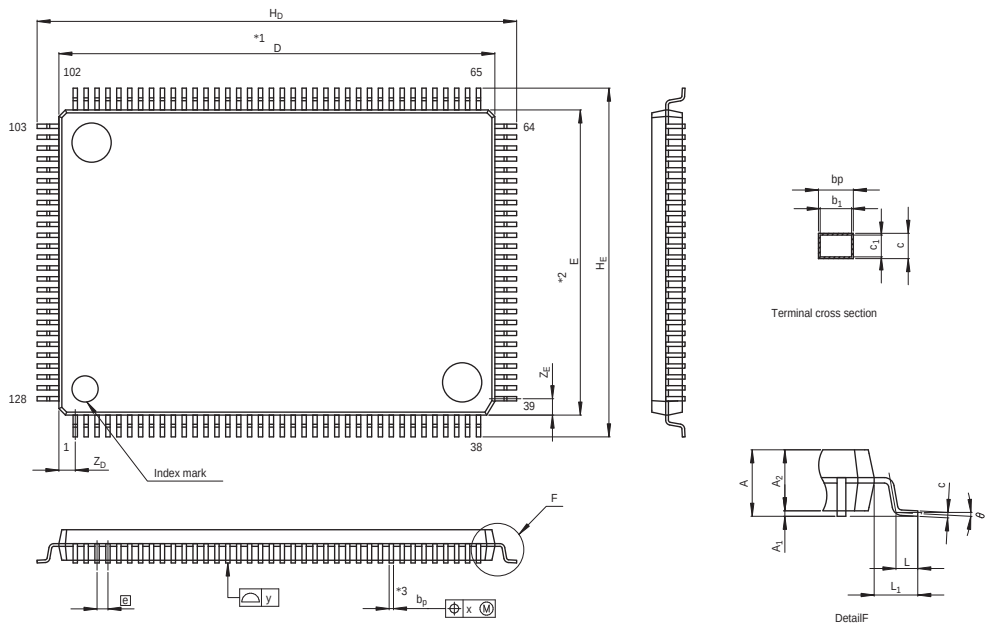

NOTE)
1. DIMENSIONS "*1" AND "*2" DO NOT INCLUDE MOLD FLASH.
2. DIMENSION "*3" DOES NOT INCLUDE TRIM OFFSET.

Reference Symbol	Dimension in Millimeters		
	Min	Nom	Max
D	19.9	20.0	20.1
E	13.9	14.0	14.1
A_2	—	1.4	—
H_D	21.8	22.0	22.2
H_E	15.8	16.0	16.2
A	—	—	1.7
A_1	0.05	0.125	0.2
b_p	0.17	0.22	0.27
b_1	—	0.20	—
c	0.09	0.145	0.20
c_1	—	0.125	—
θ	0°	—	8°
e	—	0.5	—
x	—	—	0.10
y	—	—	0.10
Z_D	—	0.75	—
Z_E	—	0.75	—
L	0.35	0.5	0.65
L_1	—	1.0	—

JEITA Package Code	RENESAS Code	Previous Code	MASS[Typ.]
P-QFP100-14x20-0.65	PRQP0100JD-B	100P6F-A	1.8g

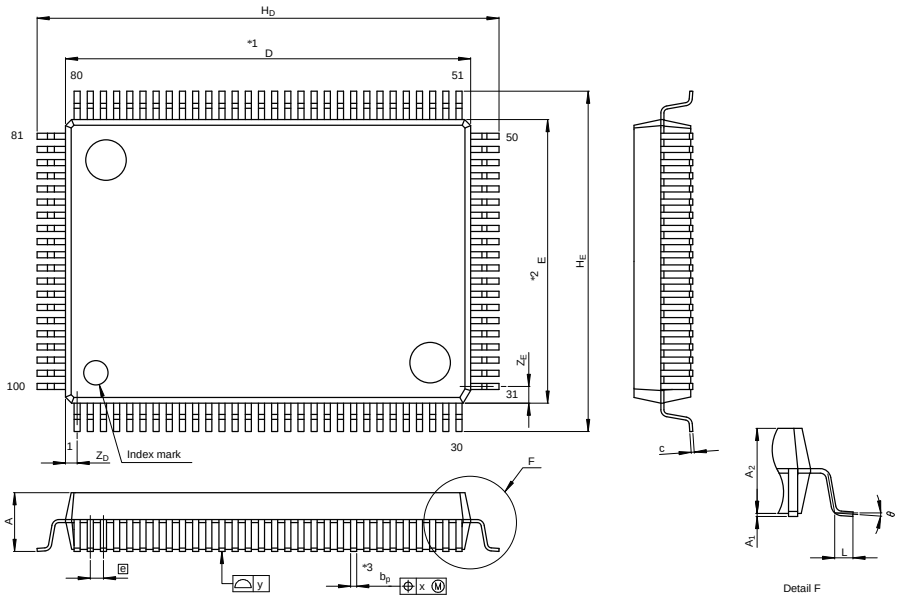

NOTE)
1. DIMENSIONS "*1" AND "*2" DO NOT INCLUDE MOLD FLASH.
2. DIMENSION "*3" DOES NOT INCLUDE TRIM OFFSET.

Reference Symbol	Dimension in Millimeters		
	Min	Nom	Max
D	19.8	20.0	20.2
E	13.8	14.0	14.2
A_2	—	2.8	—
H_D	22.5	22.8	23.1
H_E	16.5	16.8	17.1
A	—	—	3.05
A_1	0	0.1	0.2
b_p	0.25	0.3	0.4
c	0.13	0.15	0.2
θ	0°	—	10°
e	—	0.65	—
x	—	—	0.13
y	—	—	0.10
Z_D	—	0.575	—
Z_E	—	0.825	—
L	0.4	0.6	0.8

Downloaded from Arrow.com.

JEITA Package Code	RENESAS Code	Previous Code	MASS[Typ.]
P-LQFP100-14x14-0.50	PLQP0100KB-A	100P6Q-A / FP-100U / FP-100UV	0.6g

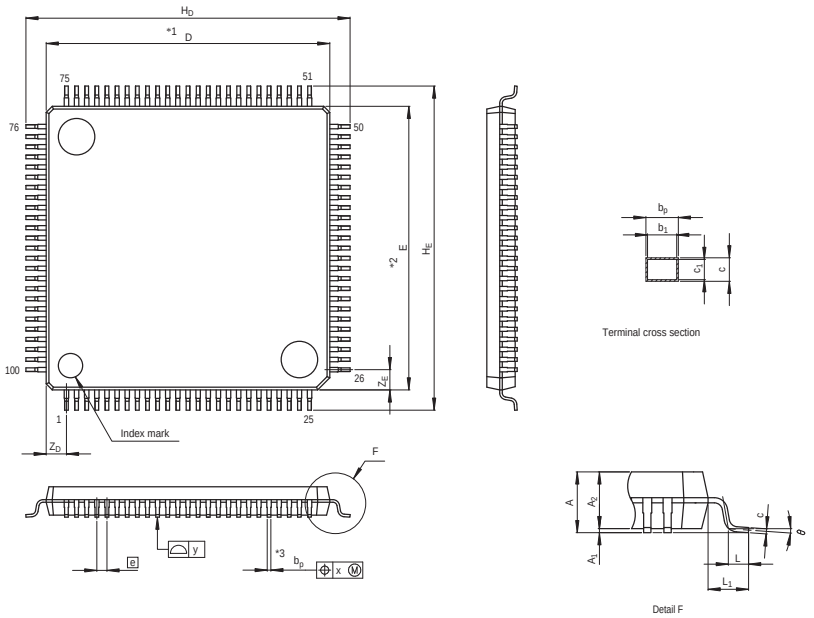

NOTE)
1. DIMENSIONS "*1" AND "*2" DO NOT INCLUDE MOLD FLASH.
2. DIMENSION "*3" DOES NOT INCLUDE TRIM OFFSET.

Reference Symbol	Dimension in Millimeters		
	Min	Nom	Max
D	13.9	14.0	14.1
E	13.9	14.0	14.1
A_2	—	1.4	—
H_D	15.8	16.0	16.2
H_E	15.8	16.0	16.2
A	—	—	1.7
A_1	0.05	0.1	0.15
b_p	0.15	0.20	0.25
b_1	—	0.18	—
c	0.09	0.145	0.20
c_1	—	0.125	—
θ	0°	—	8°
e	—	0.5	—
x	—	—	0.08
y	—	—	0.08
Z_D	—	1.0	—
Z_E	—	1.0	—
L	0.35	0.5	0.65
L_1	—	1.0	—

Downloaded from Arrow.com.

REVISION HISTORY	M16C/65 Group Datasheet

Rev.	Date	Description	
		Page	Summary
1.00	Feb 02, 2009	-	First Edition issued.
1.10	Sep 24, 2009	3	Table 1.2 Specifications for the 128-Pin Package (2/2) partially modified
		5	Table 1.4 Specifications for the 100-Pin Package (2/2) partially modified
		6	Table 1.5 Product List (1/2) partially modified
		7	Table 1.6 Product List (2/2) partially modified
		8	Figure 1.2 Marking Diagram (Top View) partially modified
		29	Figure 3.2 Memory Map 13800h → 13000h
		32	Table 4.2 “SFR Information (2/16)”notes partially modified
		48	Table 5.1 Absolute Maximum Ratings partially modified
		49	Table 5.2 Recommended Operating Conditions (1/3) partially modified
		50	Table 5.3 Recommended Operating Conditions (2/3) partially modified
		51	Table 5.4 Recommended Operating Conditions (3/3) added
		51	Figure 5.1 Ripple Waveform added
		52	Table 5.5 A/D Conversion Characteristics (1/2) partially modified
		52	Figure 5.2 A/D Accuracy Measure Circuit added
		53	Table 5.6 A/D Conversion Characteristics (2/2) partially modified
		55	Table 5.8 CPU Clock When Operating Flash Memory ($f_{(BCLK)}$) partially modified
		55	Table 5.9 Flash Memory (Program ROM 1, 2) Electrical Characteristics partially modified
		56	Table 5.10 Flash Memory (Data Flash) Electrical Characteristics notes modified
		57	Table 5.11 Voltage Detector 0 Electrical Characteristics partially modified
		57	Table 5.12 Voltage Detector 1 Electrical Characteristics partially modified
		58	Table 5.13 Voltage Detector 2 Electrical Characteristics partially modified
		58	Table 5.14 Power-On Reset Circuit partially modified
		59	Figure 5.3 Power-On Reset Circuit Electrical Characteristics 0.1 V → V_{por1}
		61	Table 5.16 40 MHz On-Chip Oscillator Circuit Electrical Characteristics (1/2) partially modified
		61	Table 5.17 40 MHz On-Chip Oscillator Circuit Electrical Characteristics (2/2) added
		61	Table 5.18 125 kHz On-Chip Oscillator Circuit Electrical Characteristics partially modified
		63	Table 5.20 Electrical Characteristics (2) partially modified
		64	Table 5.21 Electrical Characteristics (3) partially modified
		65	Table 5.22 Electrical Characteristics (4) partially modified
		66	Table 5.23 Electrical Characteristics (5) partially modified
		67	Table 5.24 Reset Input ($\overline{\text{RESET}}$ Input) partially modified
		85	Table 5.42 Electrical Characteristics (1) partially modified
		87	Table 5.44 Electrical Characteristics (3) partially modified
		88	Table 5.45 Electrical Characteristics (4) partially modified
		89	Table 5.46 Electrical Characteristics (5) partially modified
		90	Table 5.47 Reset Input ($\overline{\text{RESET}}$ Input) partially modified
2.00	Dec 10, 2010	Overall	001Ah Voltage Detector Operation Enable Register: Changed reset value from “000X 0000b”.
		Overall	002Ah Voltage Monitor 0 Control Register: Changed reset value from “1100 XX10b”.
		Overall	002Bh Voltage Monitor 1 Control Register: Changed reset value from “1000 1X10b”.
		Overall	0324h Increment/Decrement Flag: Changed name from Up/Down Flag.
		Overall	03DCh D/A Control Register: Changed reset value from “XXXX XX00b”.
		Overall	D08Ah to D08Bh PMC0 Counter Value Register: Deleted.
		Overall	D09Eh to D09Fh PMC1 Counter Value Register: Deleted.
		Overview	
		3, 5	Table 1.2 and Table 1.4 Specifications for the 128/100-Pin Package: Deleted note 1.
		6	Table 1.5 Product List (1/2): Changed the development status.
		19, 22	Table 1.12 and Table 1.15 Pin Functions: Changed the descriptions of the $\overline{\text{HOLD}}$ pin.
		Address Space	
		29	Figure 3.2 Memory Map: Added note 1 and 3 to the reserved areas.

Downloaded from Arrow.com.

REVISION HISTORY	M16C/65 Group Datasheet

Rev.	Date	Description	
		Page	Summary
2.00	Dec 10, 2010	**Special Function Registers (SFRs)**	
		31	Table 4.1 SFR Information (1): • Deleted “the VCR1 register, the VCR2 register” from note 2. • Deleted notes 5 to 6 and added note 5.
		32	Table 4.2 SFR Information (2): Deleted notes 2 to 7 and added note 2.
		49	4.2.1 Register Settings: Added the description regarding read-modify-write instructions.
		50	Table 4.20 Read-Modify-Write Instructions: Added.
		Electrical Characteristics	
		51	Table 5.1 Absolute Maximum Ratings: Added a row for the data area value to T_{opr} (Flash program erase).
		52	Table 5.2 Recommended Operating Conditions (1/3): Added rows for the CEC value to V_{CC1}, V_{CC2}, V_{IH}, and V_{IL}.
		57	Table 5.9 Flash Memory (Program ROM 1, 2) Electrical Characteristics: Added a condition to the Read voltage row.
		60	Table 5.14 Power-On Reset Circuit: • Added the $t_{w(por)}$ row. • Added the last line in note 1.
		60	Figure 5.3 Power-On Reset Circuit Electrical Characteristics: Deleted note 2.
		64	Table 5.20 Electrical Characteristics (2): Added “ZP, IDU, IDV, IDW” to the V_{T+} - V_{T-} row.
		65	Table 5.21 Electrical Characteristics (3): Moved R5F3651ENFC and R5F3651EDFC to Table 5.22 Electrical Characteristics (4).
		73, 96	5.2.2.7 and 5.3.2.7 Multi-master I^2C-bus: Added.
		74 to 81, 97 to 104	Table 5.37 to Table 5.42 and Table 5.60 to Table 5.65 Memory Expansion Mode and Microprocessor Mode: Deleted the following: • $\overline{HOLD}$ input setup time • $\overline{HOLD}$ input hold time • $\overline{HLDA}$ output delay time
		74	Table 5.37 Memory Expansion Mode and Microprocessor Mode: Changed $\overline{RDY}$ input setup time from 30.
		75, 98	Figure 5.13 and Figure 5.28 Timing Diagram: Deleted lower figure (Common to wait state and no wait state settings).
		86, 109	Figure 5.19 and Figure 5.34 Timing Diagram: Changed the width of th(RD-AD).
		87	Table 5.43 Electrical Characteristics (1): • Added rows for the CEC value to V_{OL}, V_{T+}-V_{T-}, and Leakage current in powered-off state. • Added “ZP, IDU, IDV, IDW” to the V_{T+} - V_{T-} row.
		88	Table 5.44 Electrical Characteristics (2): Moved R5F3651ENFC and R5F3651EDFC to Table 5.45 Electrical Characteristics (3).
		88 to 90	Table 5.44 to Table 5.46 Electrical Characteristics (2) to (4): Changed “VCC1 = 5.0 V” to "VCC1 = 3.0 V" in the During flash memory program and During flash memory erase rows.
		97	Table 5.60 Memory Expansion Mode and Microprocessor Mode: Changed $\overline{RDY}$ input setup time from 40.
2.10	Ju. 31, 2012	**Electrical Characteristics**	
		Vcc = 5 V	
		65, 66, 67	Table 5.21 Electrical Characteristics (3), Table 5.22 Electrical Characteristics (4), and Table 5.23 Electrical Characteristics (5): Changed the Measuring Condition column of 40 MHz on-chip oscillator for the 40 MHz on-chip oscillator mode in the I_{CC}.
		Vcc = 3 V	
		88, 89, 90	Table 5.44 Electrical Characteristics (2), Table 5.45 Electrical Characteristics (3), and Table 5.46 Electrical Characteristics (4): Changed the Measuring Condition column of 40 MHz on-chip oscillator for the 40 MHz on-chip oscillator mode in the I_{CC}.

All trademarks and registered trademarks are the property of their respective owners.

HDMI and High-Definition Multimedia Interface are registered trademarks of HDMI Licensing, LLC.

Downloaded from Arrow.com.

General Precautions in the Handling of MPU/MCU Products

The following usage notes are applicable to all MPU/MCU products from Renesas. For detailed usage notes on the products covered by this manual, refer to the relevant sections of the manual. If the descriptions under General Precautions in the Handling of MPU/MCU Products and in the body of the manual differ from each other, the description in the body of the manual takes precedence.

1. Handling of Unused Pins

   Handle unused pins in accord with the directions given under Handling of Unused Pins in the manual.

   — The input pins of CMOS products are generally in the high-impedance state. In operation with an unused pin in the open-circuit state, extra electromagnetic noise is induced in the vicinity of LSI, an associated shoot-through current flows internally, and malfunctions occur due to the false recognition of the pin state as an input signal become possible. Unused pins should be handled as described under Handling of Unused Pins in the manual.

2. Processing at Power-on

   The state of the product is undefined at the moment when power is supplied.

   — The states of internal circuits in the LSI are indeterminate and the states of register settings and pins are undefined at the moment when power is supplied.

     In a finished product where the reset signal is applied to the external reset pin, the states of pins are not guaranteed from the moment when power is supplied until the reset process is completed.

     In a similar way, the states of pins in a product that is reset by an on-chip power-on reset function are not guaranteed from the moment when power is supplied until the power reaches the level at which resetting has been specified.

3. Prohibition of Access to Reserved Addresses

   Access to reserved addresses is prohibited.

   — The reserved addresses are provided for the possible future expansion of functions. Do not access these addresses; the correct operation of LSI is not guaranteed if they are accessed.

4. Clock Signals

   After applying a reset, only release the reset line after the operating clock signal has become stable. When switching the clock signal during program execution, wait until the target clock signal has stabilized.

   — When the clock signal is generated with an external resonator (or from an external oscillator) during a reset, ensure that the reset line is only released after full stabilization of the clock signal. Moreover, when switching to a clock signal produced with an external resonator (or by an external oscillator) while program execution is in progress, wait until the target clock signal is stable.

5. Differences between Products

   Before changing from one product to another, i.e. to one with a different part number, confirm that the change will not lead to problems.

   — The characteristics of MPU/MCU in the same group but having different part numbers may differ because of the differences in internal memory capacity and layout pattern. When changing to products of different part numbers, implement a system-evaluation test for each of the products.

Downloaded from Arrow.com.

Notice

1. Descriptions of circuits, software and other related information in this document are provided only to illustrate the operation of semiconductor products and application examples. You are fully responsible for the incorporation of these circuits, software, and information in the design of your equipment. Renesas Electronics assumes no responsibility for any losses incurred by you or third parties arising from the use of these circuits, software, or information.
2. Renesas Electronics has used reasonable care in preparing the information included in this document, but Renesas Electronics does not warrant that such information is error free. Renesas Electronics assumes no liability whatsoever for any damages incurred by you resulting from errors in or omissions from the information included herein.
3. Renesas Electronics does not assume any liability for infringement of patents, copyrights, or other intellectual property rights of third parties by or arising from the use of Renesas Electronics products or technical information described in this document. No license, express, implied or otherwise, is granted hereby under any patents, copyrights or other intellectual property rights of Renesas Electronics or others.
4. You should not alter, modify, copy, or otherwise misappropriate any Renesas Electronics product, whether in whole or in part. Renesas Electronics assumes no responsibility for any losses incurred by you or third parties arising from such alteration, modification, copy or otherwise misappropriation of Renesas Electronics product.
5. Renesas Electronics products are classified according to the following two quality grades: "Standard" and "High Quality". The recommended applications for each Renesas Electronics product depends on the product's quality grade, as indicated below.
   "Standard": Computers; office equipment; communications equipment; test and measurement equipment; audio and visual equipment; home electronic appliances; machine tools; personal electronic equipment; and industrial robots etc.
   "High Quality": Transportation equipment (automobiles, trains, ships, etc.); traffic control systems; anti-disaster systems; anti-crime systems; and safety equipment etc.
   Renesas Electronics products are neither intended nor authorized for use in products or systems that may pose a direct threat to human life or bodily injury (artificial life support devices or systems, surgical implantations etc.), or may cause serious property damages (nuclear reactor control systems, military equipment etc.). You must check the quality grade of each Renesas Electronics product before using it in a particular application. You may not use any Renesas Electronics product for any application for which it is not intended. Renesas Electronics shall not be in any way liable for any damages or losses incurred by you or third parties arising from the use of any Renesas Electronics product for which the product is not intended by Renesas Electronics.
6. You should use the Renesas Electronics products described in this document within the range specified by Renesas Electronics, especially with respect to the maximum rating, operating supply voltage range, movement power voltage range, heat radiation characteristics, installation and other product characteristics. Renesas Electronics shall have no liability for malfunctions or damages arising out of the use of Renesas Electronics products beyond such specified ranges.
7. Although Renesas Electronics endeavors to improve the quality and reliability of its products, semiconductor products have specific characteristics such as the occurrence of failure at a certain rate and malfunctions under certain use conditions. Further, Renesas Electronics products are not subject to radiation resistance design. Please be sure to implement safety measures to guard them against the possibility of physical injury, and injury or damage caused by fire in the event of the failure of a Renesas Electronics product, such as safety design for hardware and software including but not limited to redundancy, fire control and malfunction prevention, appropriate treatment for aging degradation or any other appropriate measures. Because the evaluation of microcomputer software alone is very difficult, please evaluate the safety of the final products or systems manufactured by you.
8. Please contact a Renesas Electronics sales office for details as to environmental matters such as the environmental compatibility of each Renesas Electronics product. Please use Renesas Electronics products in compliance with all applicable laws and regulations that regulate the inclusion or use of controlled substances, including without limitation, the EU RoHS Directive. Renesas Electronics assumes no liability for damages or losses occurring as a result of your noncompliance with applicable laws and regulations.
9. Renesas Electronics products and technology may not be used for or incorporated into any products or systems whose manufacture, use, or sale is prohibited under any applicable domestic or foreign laws or regulations. You should not use Renesas Electronics products or technology described in this document for any purpose relating to military applications or use by the military, including but not limited to the development of weapons of mass destruction. When exporting the Renesas Electronics products or technology described in this document, you should comply with the applicable export control laws and regulations and follow the procedures required by such laws and regulations.
10. It is the responsibility of the buyer or distributor of Renesas Electronics products, who distributes, disposes of, or otherwise places the product with a third party, to notify such third party in advance of the contents and conditions set forth in this document, Renesas Electronics assumes no responsibility for any losses incurred by you or third parties as a result of unauthorized use of Renesas Electronics products.
11. This document may not be reproduced or duplicated in any form, in whole or in part, without prior written consent of Renesas Electronics.
12. Please contact a Renesas Electronics sales office if you have any questions regarding the information contained in this document or Renesas Electronics products, or if you have any other inquiries.

(Note 1) "Renesas Electronics" as used in this document means Renesas Electronics Corporation and also includes its majority-owned subsidiaries.

(Note 2) "Renesas Electronics product(s)" means any product developed or manufactured by or for Renesas Electronics.

SALES OFFICES Renesas Electronics Corporation http://www.renesas.com

Refer to "http://www.renesas.com/" for the latest and detailed information.

Renesas Electronics America Inc.
2880 Scott Boulevard Santa Clara, CA 95050-2554, U.S.A.
Tel: +1-408-588-6000, Fax: +1-408-588-6130

Renesas Electronics Canada Limited
1101 Nicholson Road, Newmarket, Ontario L3Y 9C3, Canada
Tel: +1-905-898-5441, Fax: +1-905-898-3220

Renesas Electronics Europe Limited
Dukes Meadow, Millboard Road, Bourne End, Buckinghamshire, SL8 5FH, U.K
Tel: +44-1628-585-100, Fax: +44-1628-585-900

Renesas Electronics Europe GmbH
Arcadiastrasse 10, 40472 Düsseldorf, Germany
Tel: +49-211-65030, Fax: +49-211-6503-1327

Renesas Electronics (China) Co., Ltd.
7th Floor, Quantum Plaza, No.27 ZhiChunLu Haidian District, Beijing 100083, P.R.China
Tel: +86-10-8235-1155, Fax: +86-10-8235-7679

Renesas Electronics (Shanghai) Co., Ltd.
Unit 204, 205, AZIA Center, No.1233 Lujiazui Ring Rd., Pudong District, Shanghai 200120, China
Tel: +86-21-5877-1818, Fax: +86-21-6887-7858 / -7898

Renesas Electronics Hong Kong Limited
Unit 1601-1613, 16/F., Tower 2, Grand Century Place, 193 Prince Edward Road West, Mongkok, Kowloon, Hong Kong
Tel: +852-2886-9318, Fax: +852 2886-9022/9044

Renesas Electronics Taiwan Co., Ltd.
13F, No. 363, Fu Shing North Road, Taipei, Taiwan
Tel: +886-2-8175-9600, Fax: +886 2-8175-9670

Renesas Electronics Singapore Pte. Ltd.
1 harbourFront Avenue, #06-10, keppel Bay Tower, Singapore 098632
Tel: +65-6213-0200, Fax: +65-6278-8001

Renesas Electronics Malaysia Sdn.Bhd.
Unit 906, Block B, Menara Amcorp, Amcorp Trade Centre, No. 18, Jln Persiaran Barat, 46050 Petaling Jaya, Selangor Darul Ehsan, Malaysia
Tel: +60-3-7955-9390, Fax: +60-3-7955-9510

Renesas Electronics Korea Co., Ltd.
11F., Samik Lavied' or Bldg., 720-2 Yeoksam-Dong, Kangnam-Ku, Seoul 135-080, Korea
Tel: +82-2-558-3737, Fax: +82-2-558-5141

© 2012 Renesas Electronics Corporation. All rights reserved.
Colophon 2.0

Downloaded from Arrow.com.