NEW

0.5mm Pitch, 3.7mm Height, FPC/FFC Connector with Incomplete Mating and Dust Prevention Features

FH50 Series

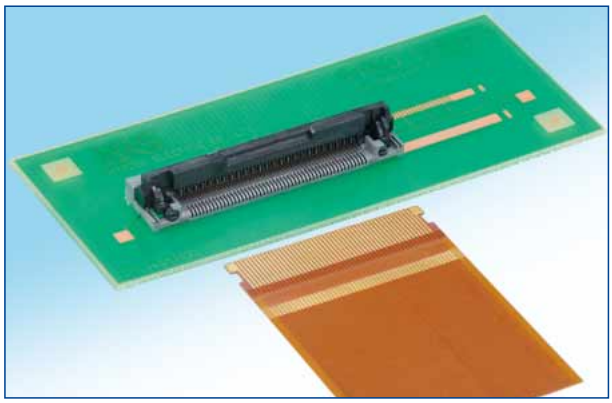

●The rotating cam avoids incomplete mating.

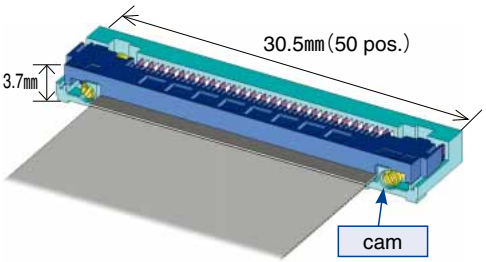

Fig. 1

■Features

1. Avoids incomplete mating with Hirose's unique cam function

Cams provided at the both sides rotate along with the actuator operation. The rotating cam avoids incomplete mating.(Please refer to Fig.1 and 3)

2. Dual beam contact

2-point spring beam contact reduces contact failure caused by contamination. (Please refer to Fig.5)

3. Secure FPC/FFC retention with raised side-catches

When the actuator is closed, the raised side-catcher captures FPC/FFC cutout and increases the FPC/FFC retention. (Please refer to Fig.2)

4. Clear tactile FPC/FFC insertion feeling & temporary holding

Tactile click feeling is generated when the FPC/FFC climbs over the side-catcher. FPC/FFC tabs are held in place by side-catcher before the actuator is closed. (Please refer to Fig.4)

5. Robust and highly reliable actuator retention

2 types of contacts are assembled alternately, holding the actuator axle from all 4 directions. Actuator is securely held in place during rotation.

6. Accepts standard FPC/FFC thickness: 0.3±0.05 mm

This connector is designed to be use 0.3±0.05 mm thick standard FPC/FFC.
(Using the appropriate FPC/FFC will prevent deformation and problems that may occur during the insertion and mating processes.)

7. Supports automatic mounting

Offered in tape and reel packaging that is compatible with automatic mounting(1,000 pieces per reel).

8. Halogen-free

Chlorine and bromine are not used in amounts that exceed the standard values in these connectors.
*Defined according to IEC 61249-2-21. Br: 900 ppm maximum, Cl: 900 ppm maximum, Br+Cl: 1,500 ppm maximum

●When the actuator is closed, the raised side-catcher captures FPC/FFC cutout and increases the FPC/FFC retention.

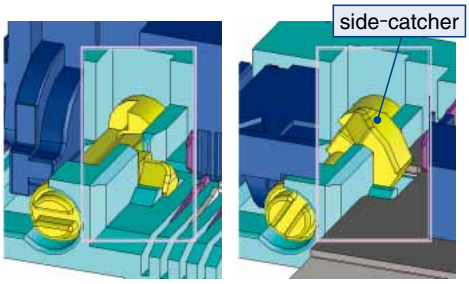

Fig. 2

●If FPC/FFC is not inserted to the end or inserted at an angle, the FPC/FFC lies over the side-catcher. Assembly failures caused by FPC/FFC mis-insertion is dramatically reduced.

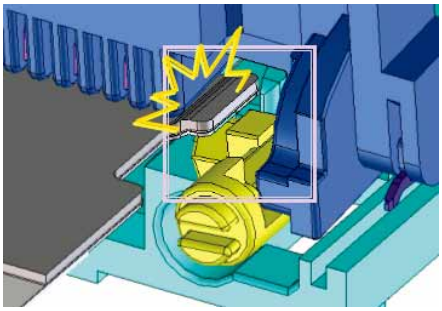

Fig. 3

●Each contact beam has spring feature and increases contact reliability.

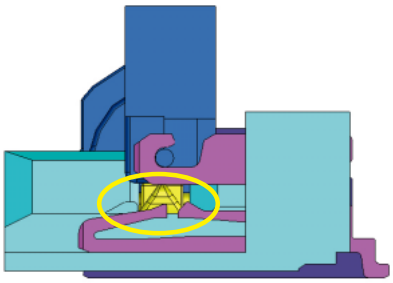

Fig. 5

●Tactile click feeling is generated when the FPC/FFC climbs over the side-catcher. FPC/FFC tabs are held in place by side-catcher before the actuator is closed.

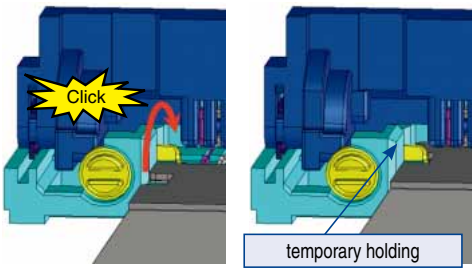

Fig. 4

In cases where the application will demand a high level of reliability, such as automotive, please contact a company representative for further information.

Aug.1.2026 Copyright 2026 HIROSE ELECTRIC CO., LTD. All Rights Reserved.

Downloaded from Arrow.com.

■Product Specifications

Ratings	Current rating	0.5A (Note 1)	Operating temperature range	-55 to +85℃(Note 2)	Storage temperature range	-10 to +50℃(Note 3)
	Voltage rating	50V AC/DC	Operating humidity range	Relative humidity 90% or less (no condensation)	Storage humidity range	Relative humidity 90% or less (no condensation)

Applicable FPC/FFC terminal specification	t=0.3±0.05mm gold plating

Items	Specifications	Conditions
1. Insulation resistance	500MΩ or more	100±10V DC
2. Withstanding voltage	No flashover or breakdown.	150V AC for 1min±5sec.
3. Contact resistance	100mΩ or less ＊Including FPC/FFC conductor resistance.	20mV AC MAX(1kHz), 1mA AC
4. Mechanical operation	Contact resistance : 100mΩ or less No damage, crack, and looseness of parts.	20 times
5. Vibration resistance	No electrical discontinuity of 1μs or more. Contact resistance : 100mΩ or less No damage, crack, and looseness of parts.	Frequency : 10 to 55Hz, Half amplitude : 0.75mm, 10 cycles in three axial directions.
6. Shock resistance	No electrical discontinuity of 1μs or more. Contact resistance : 100mΩ or less No damage, crack, and looseness of parts.	Test pulse : half-sine wave, Peak acceleration:981m/s^2 Duration : 6ms 3 times of shocks shall be applied for each 6 directions along 3 mutually perpendicular axes.
7. Humidity resistance (Steady state)	Contact resistance : 100mΩ or less Insulation resistance : 50MΩ or more No damage, crack, and looseness of parts.	Exposed to temperature 40±2℃ and Relative humidity 90 to 95% for 96 hours.
8. temperature cycle	Contact resistance : 100mΩ or less Insulation resistance : 50MΩ or more No damage, crack, and looseness of parts.	Temperature: -55 → +15 to +35 → +85 → +15 to +35 ℃ Time: 30 → 2 to 3 → 30 → 2 to 3 minutes 5 cycles with the above conditions.
9. Solder heat resistance	No deformation of components affecting performance.	Reflow soldering : Peak temperature 250℃MAX, Over 230℃ within 60sec. Manual soldering : 350±10℃, 5±1sec.

Note 1 : When passing the current through all of the contacts, use 70% of the current rating.
Note 2 : Includes temperature rise caused by current flow.
Note 3 : The term “storage” refers to the long term storage condition of unused products before PCB mounting.
The temperature and humidity operating ranges apply to no-electrification state after PCB mounting.
Note 4 : Incomplete mating prevention structure of this connector does not cover all the possible case of incomplete mating mode.
Be sure to need the instruction manual for your understanding of the features and attentions.

■Materials

Part	Material	Color/Finish	Remarks
Insulator	LCP	Gray	UL94V-0
		Black	
		Black	
Contact	Phosphor bronze	Nickel barrier gold plating	――――
Metal fitting	Phosphor bronze	Pure tin reflow plating	

■Product Number Structure

Refer to the chart below when determining the product specifications from the product number.
Please select from the product numbers listed in this catalog when placing orders.

FH 50 - 50S - 0.5 SH
❶ ❷ ❸ ❹ ❺

❶ Series Name: FH	❹ Contact Pitch: 0.5 mm
❷ Series No.: 50	❺ Contact Form SH…SMT horizontal mounting type
❸ Number of contacts: 28 to 50	

Aug.1.2026 Copyright 2026 HIROSE ELECTRIC CO., LTD. All Rights Reserved.

Downloaded from Arrow.com.

■Connector Dimensions

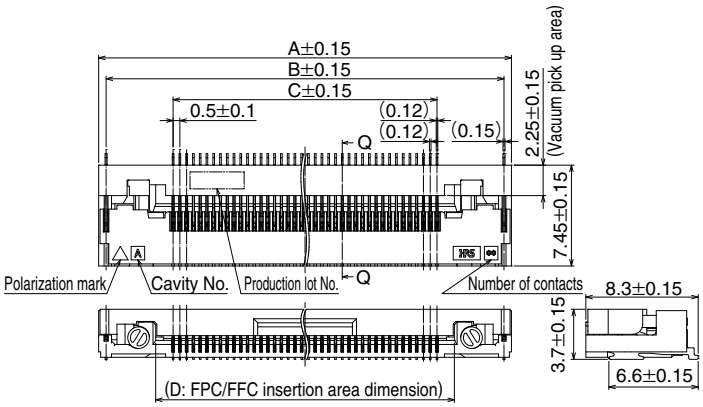

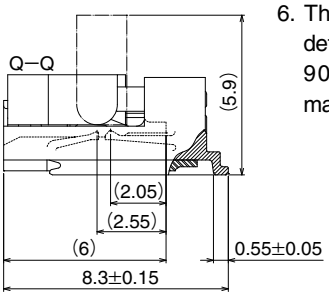

Notes :
1. Lead coplanarity including metal fittings shall be 0.1mm max.
2. Delivered as tape and reel package. See packaging specification for details.
3. Material core-outs and/or slits may be added on the insulator body or actuator.
   Location or configuration will not affect form, fit or function.
4. Slight dark spots or material discoloration will not affect form, fit or function.
5. After reflow, the terminal plating may change color, however this does not represent a quality issue.
6. This product satisfies halogen free requirements defined as 900ppm maximum chlorine, 900ppm maximum bromine, and 1500ppm maximum total of chlorine and bromine.

Unit: mm

Product No.	HRS No.	Number of contacts	A	B	C	D
FH50-28S-0.5SH	CL580-4005-5-00	28	24.5	23.4	13.5	16.07
FH50-40S-0.5SH	CL580-4004-2-00	40	30.5	29.4	19.5	22.07
FH50-50S-0.5SH	CL580-4001-4-00	50	35.5	34.4	24.5	27.07

Note 1 : Delivered as tape and reel package(1000 pieces per reel). Please order by number of reels.

◆Recommended PCB layout

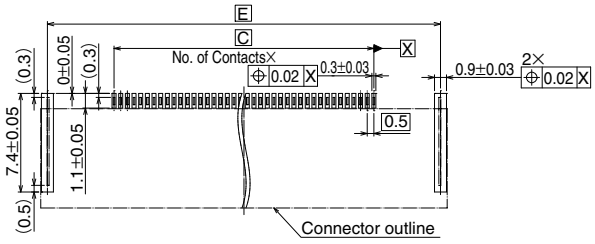

◆Recommended stencil layout

∗Recommended stencil thickness : t = 0.15 mm

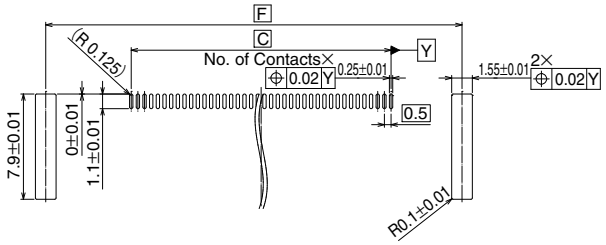

◆Recommended FPC/FFC layout

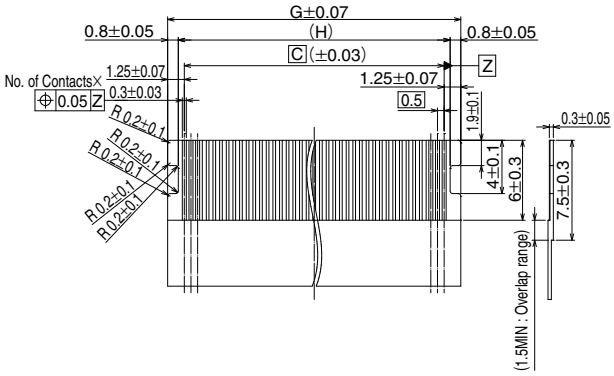

Unit: mm

Product No.	HRS No.	Number of contacts	E	F	G	H
FH50-28S-0.5SH	CL580-4005-5-00	28	23.5	23.95	16	14.4
FH50-40S-0.5SH	CL580-4004-2-00	40	29.5	29.95	22	20.4
FH50-50S-0.5SH	CL580-4001-4-00	50	34.5	34.95	27	25.4

Aug.1.2026 Copyright 2026 HIROSE ELECTRIC CO., LTD. All Rights Reserved.

Downloaded from Arrow.com.

◆FH50 Series FPC/FFC Material Configuration(Recommended Specifications)

1. Single-Sided FPC

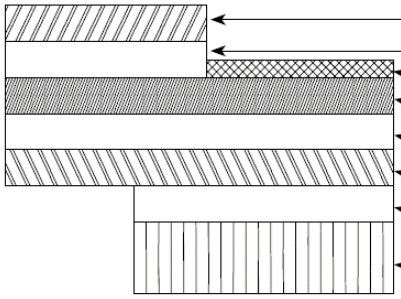

Layer	Material	Thickness(μm)
Coverlay film	Polyimide 1 mil	(25)
Cover adhesive		(25)
Surface treatment	Underlying nickel plating 1 to 5μm +gold plating 0.2μm	3
Copper foil	Cu 1 oz	35
Base adhesive	Thermosetting adhesive	25
Base film	Polyimide 1 mil	25
Reinforcement material adhesive	Thermosetting adhesive	30
Stiffener	Polyimide 7 mil	175
	Total	293

2. Double-sided FPC

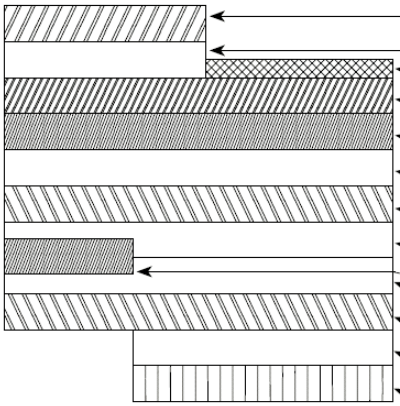

Layer	Material	Thickness(μm)
Coverlay film	Polyimide 1 mil	(25)
Cover adhesive		(25)
Surface treatment	Underlying nickel plating 1 to 5μm+gold plating 0.2μm	3
Copper plated-through hole	Cu	15
Copper foil	Cu 1/2 oz	18
Base adhesive	Thermosetting adhesive	18
Base film	Polyimide 1 mil	25
Base adhesive	Thermosetting adhesive	18
Copper foil	Cu 1/2 oz	(18)
Cover adhesive	Thermosetting adhesive	25
Coverlay film	Polyimide 1 mil	25
Reinforcement material adhesive	Thermosetting adhesive	50
Stiffener	Polyimide 4 mil	100
	Total	297

*For double-sided FPC, please remove the copper foil on the back side to prevent release of the lock due to FPC bending.

3. FFC

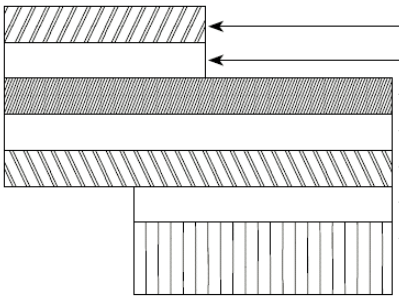

Layer	Material	Thickness(μm)
Polyester film		(12)
Adhesive	Polyester type	(30)
Annealed copper foil (Gold plated with underlying nickel plating)		35
Adhesive	Polyester type	30
Polyester film		12
Adhesive	Polyester type	30
Stiffener	Polyester type	188
	Total	295

*Dimension tolerance of thickness is demonstrated approximately ±20μm.

1. This specification is an example of FH50 Series FPC/FFC(t=0.3±0.05mm) material configuration.
   Please make sure that the thickness of FPC/FFC mating area is 0.3±0.05mm.
2. Please consult each FPC/FFC suppliers for configuration details.

Aug.1.2026 Copyright 2026 HIROSE ELECTRIC CO., LTD. All Rights Reserved.

Downloaded from Arrow.com.

◆Packaging specifications

●Embossed carrier tape dimensions

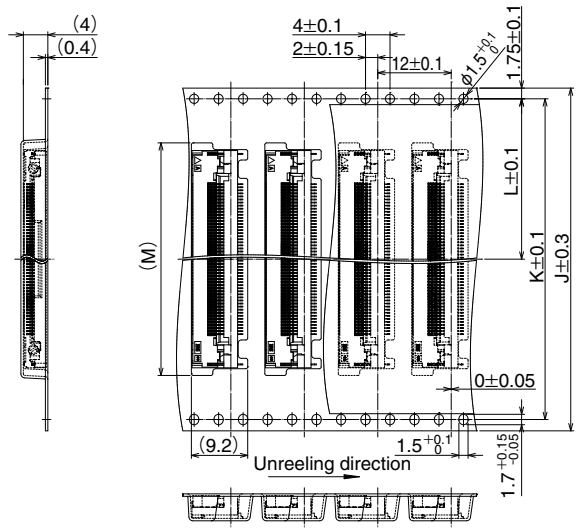

●Reel dimensions

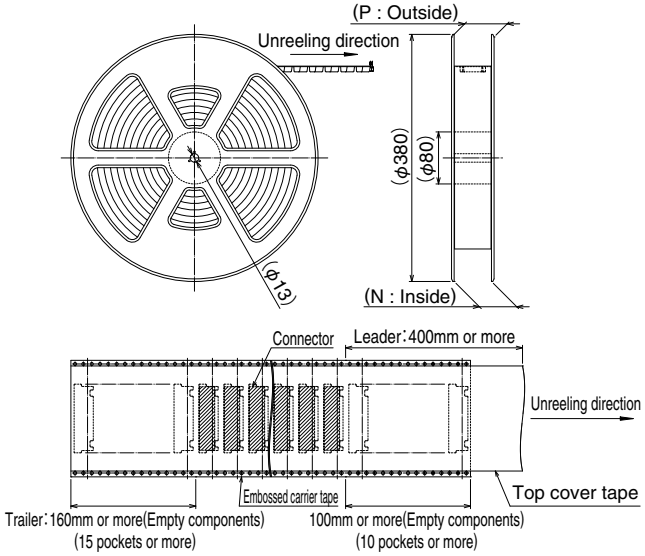

Unit: mm

Product No.	HRS No.	Number of contacts	J	K	L	M	N	P
FH50-28S-0.5SH	CL580-4005-5-00	28	44	40.4	20.2	27	45.4	49.4
FH50-40S-0.5SH	CL580-4004-2-00	40	56	52.4	26.2	33	57.4	61.4
FH50-50S-0.5SH	CL580-4001-4-00	50	56	52.4	26.2	38	57.4	61.4

◆Temperature profile

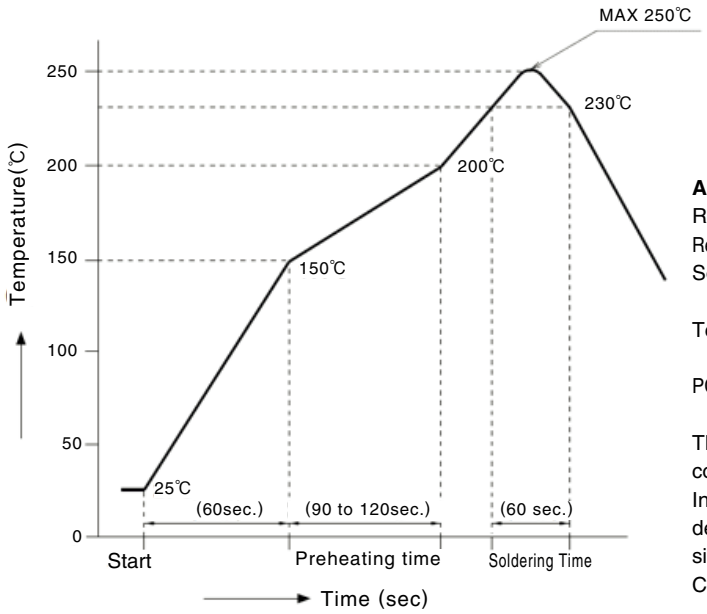

Applicable conditions

Reflow method : Far-infrared/hot-air reflow
Reflow atmosphere : Air
Solder : Paste type Sn/3.0Ag/0.5Cu
(M705-GRN360-K2-V;Senju Metal Industry Co., Ltd.)
Test PCB : PCB material and size
Glass epoxy 30×70×0.8mm
PCB,stencil layout : Recommended conditions

This temperature profile is based on the above applicable conditions.
In individual applications, the actual temperature may vary, depending on solder paste type, volume/thickness and PCB size/thickness.
Confirmation is required prior to mass production.

Aug.1.2026 Copyright 2026 HIROSE ELECTRIC CO., LTD. All Rights Reserved.

Downloaded from Arrow.com.

◆Operations and Precautions

【Operations and Precautions】

This connector requires careful handling.
Follow recommendations given below to prevent connector/FPC/FFC breakage and contact failure(mating failure, FPC/FFC pattern breakage, etc.).
The numerical values shown are not part of the connector specification.

1. How to operate the actuator

Apply load to rotate the actuator by 90 degrees. [Fig.1]

[Caution]

◆Do not insert any tools or fingernails inside the connector while opening it as this may cause damage to the contacts. [Fig.2]
◆The actuator is opened up to the movable limit, 90 degrees.
Do not open the actuator beyond the specified degree or apply excess force to the actuator. [Fig.3]
◆Operate the actuator by hand without using sharp tool such as tweezers. [Fig.4]
◆Do not attempt to dislodge the open actuator as this may cause damage to the connector. [Fig.5]

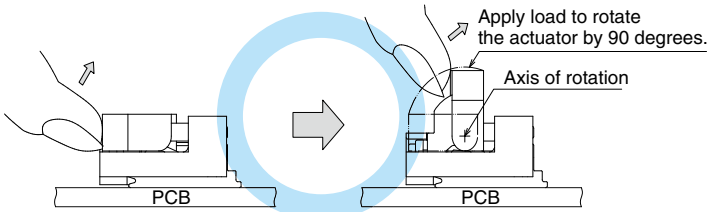

【Fig. 1】

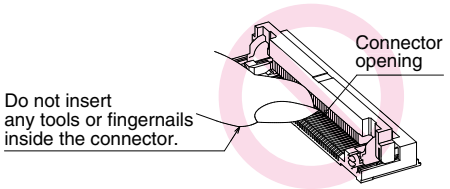

【Fig. 2】

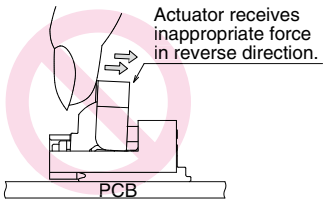

【Fig. 3】

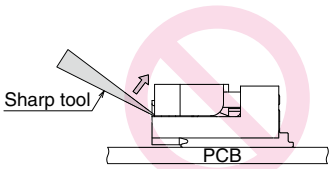

【Fig. 4】

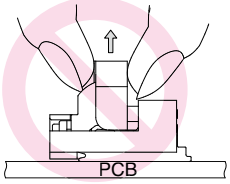

【Fig. 5】

2. How to insert FPC/FFC

Insert the FPC/FFC into the connector parallel to the PCB plane and perpendicular to the connector after opening the actuator by 90 degrees.
Insert it properly to the end. [Fig.6, Fig.7]

[Caution]

◆This is a bottom contact point connector.
FPC/FFC must be inserted with the exposed contact surfaces facing down.
◆This connector has temporary FPC/FFC holding structure with cams on each sides of the connector.
Tactile sensation generated during FPC/FFC insertion does not affect connector quality.
◆Do not insert the FPC/FFC at a sharp angle as this may cause contact deformation,
FPC/FFC pattern breakage or only partial insertion in the connector.[Fig.8, Fig.9]

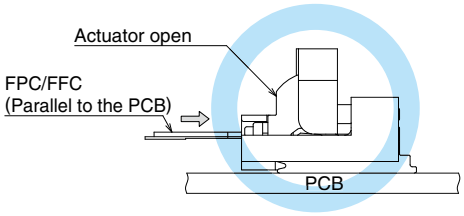

【Fig. 6】

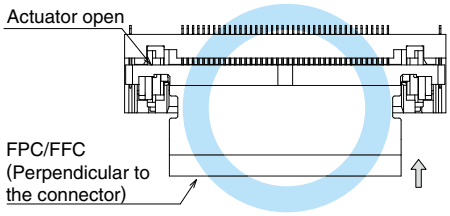

【Fig. 7】

Aug.1.2026 Copyright 2026 HIROSE ELECTRIC CO., LTD. All Rights Reserved.

Downloaded from Arrow.com.

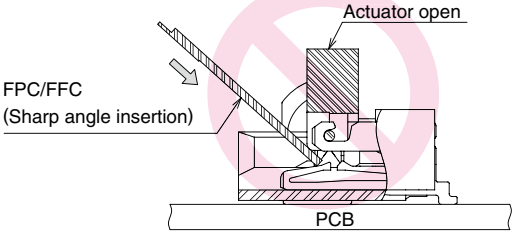

【Fig. 8】

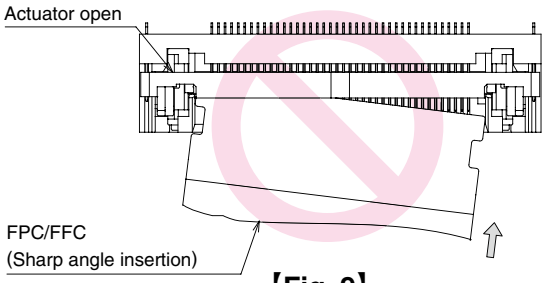

【Fig. 9】

3. How to lock

Apply load to rotate the actuator by 90 degrees after inserting the FPC/FFC to the end. [Fig.10]

[Caution]

◆The actuator does not close if the FPC/FFC is not inserted to the end (hereinafter called "Incomplete mating"). "= Incomplete mating prevention structure"

◆Do not rotate the actuator to the counter direction. Otherwise, it may break. [Fig.11]

◆Operate the actuator by hand without using sharp tool such as tweezers. [Fig.12]

◆Do not attempt to dislodge the open actuator as this may cause damage to the connector. [Fig.13]

◆Apply load to the center on the actuator to rotate it. Do not apply force to the actuator at one end only. Uneven load could twist the actuator and cause actuator breakage. [Fig.14, Fig.15]

◆Although this connector has "Incomplete mating prevention structure" of FPC/FFC, avoid forcible actuator operation in incomplete mating mode, or this could damage connector. Stop the operation and confirm the FPC/FFC positioning. When you detect incomplete mating, direction of the slit on cam indicates mode of the FPC/FFC insertion as shown in ① and ② below.

① If the slit on cam rotates along with closing actuator, the FPC/FFC is inserted to the end. Proceed the operation. [Fig.16]

② If the slit on cam remains still while the actuator is closed, the FPC/FFC is not inserted correctly. Stop the operation and confirm FPC/FFC positioning. [Fig.17]

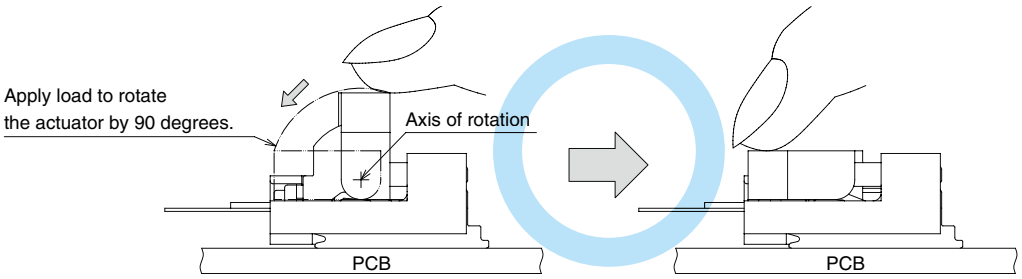

【Fig. 10】

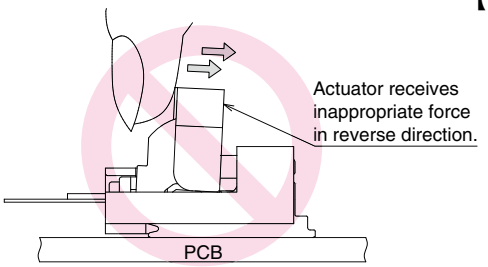

【Fig. 11】

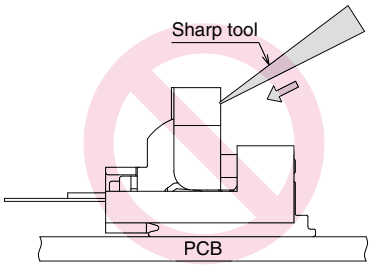

【Fig. 12】

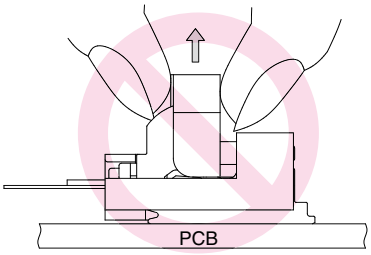

【Fig. 13】

Aug.1.2026 Copyright 2026 HIROSE ELECTRIC CO., LTD. All Rights Reserved.

Downloaded from Arrow.com.

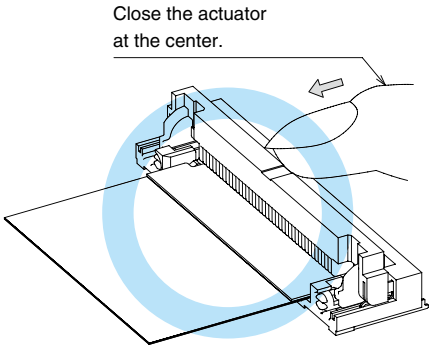

【Fig. 14】

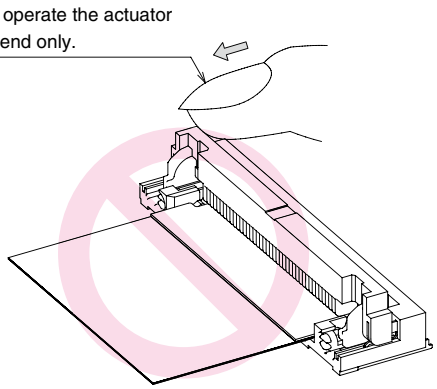

【Fig. 15】

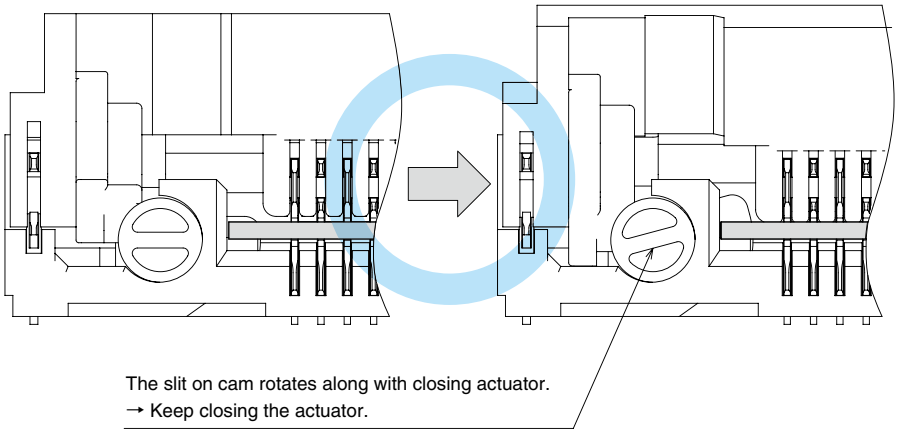

【Fig. 16】

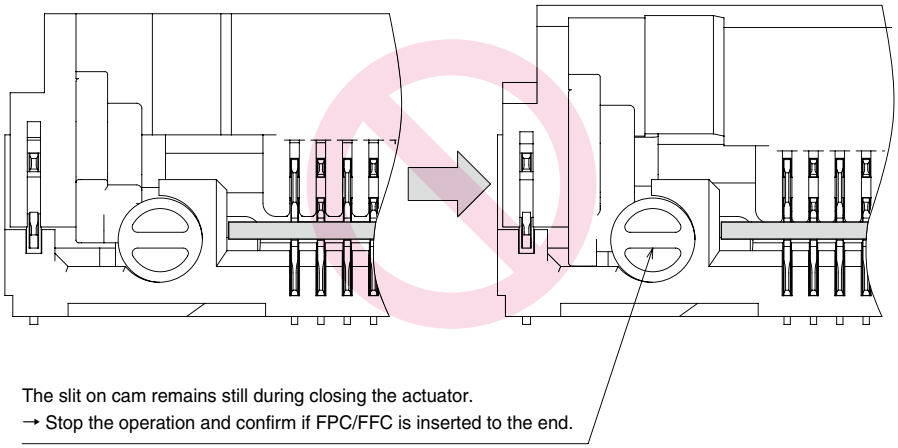

【Fig. 17】

4. How to unlock

To release the lock, apply load to rotate the actuator by 90 degrees. [Fig.18]

[Caution]

◆The actuator is opened up to the movable limit, 90 degrees.
Do not open the actuator beyond the specified degree or apply excess force to the actuator. [Fig.19]

◆Operate the actuator by hand without using sharp tool such as tweezers. [Fig.20]

◆Apply load to the center on the actuator to rotate it.
Do not apply force to the actuator at one end only.
Uneven load could twist the actuator and cause actuator breakage. [Fig.21, Fig.22]

Aug.1.2026 Copyright 2026 HIROSE ELECTRIC CO., LTD. All Rights Reserved.

Downloaded from Arrow.com.

Aug.1.2026 Copyright 2026 HIROSE ELECTRIC CO., LTD. All Rights Reserved.

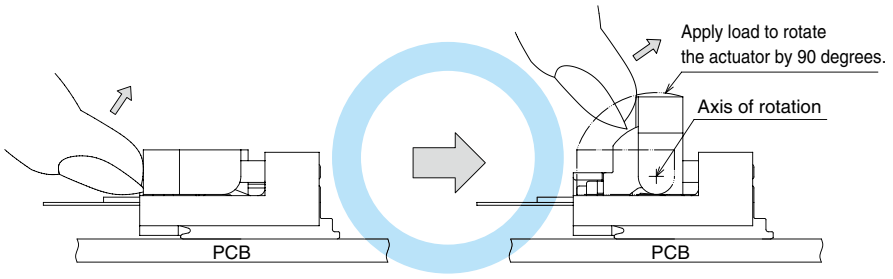

【Fig. 18】

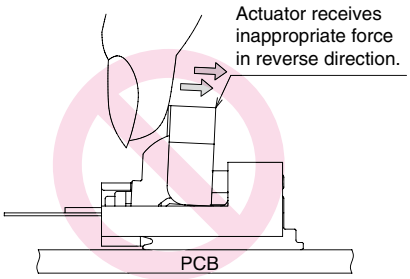

【Fig. 19】

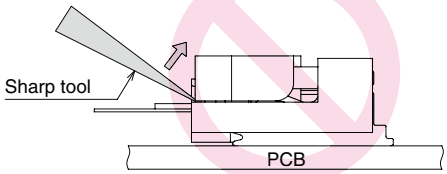

【Fig. 20】

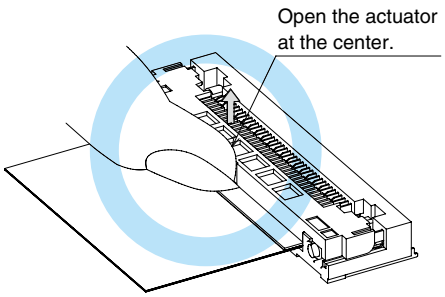

【Fig. 21】

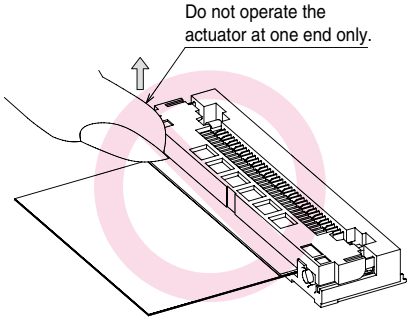

【Fig. 22】

5. How to remove FPC/FFC

After rotating the actuator to the fully opened position, carefully remove the FPC/FFC in the direction parallel to the PCB mounting surface. [Fig.23, Fig.24]

[Caution]

◆Do not remove the FPC/FFC at a sharp angle as this may cause connector breakage or FPC/FFC pattern breakage. [Fig.25, Fig.26]

◆This connector has temporary FPC/FFC holding structure with cams on each sides of the connector. Tactile sensation generated during FPC/FFC removal does not affect connector quality.

◆When the actuator is not fully opened, do not attempt to remove the FPC/FFC as this may cause damage to the connector.
In that case, stop the operation and confirm if the actuator opens to 90 degrees.
Then proceed the operation.
Direction of the slit on cam shows if the FPC/FFC can be removed as shown in ① and ② below.

① When the slit on cam is horizontal, the FPC/FFC can be removed. [Fig.27]
② If the slit on cam is angled, forcible FPC/FFC removal could cause damage to the connector.
Confirm if the actuator opens to 90 degrees. [Fig.28]

◆Do not attempt to remove the FPC/FFC without unlocking the actuator.
This could damage connector and FPC/FFC. [Fig.29]

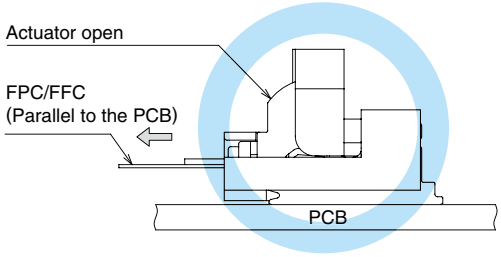

【Fig. 23】

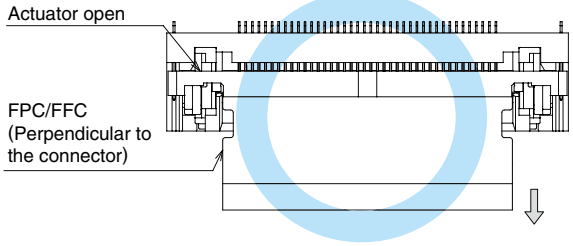

【Fig. 24】

Downloaded from Arrow.com.

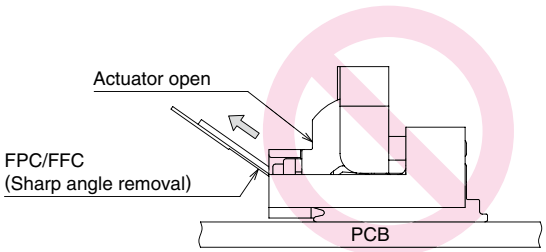

【Fig. 25】

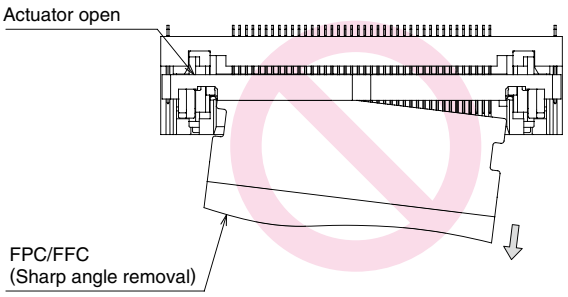

【Fig. 26】

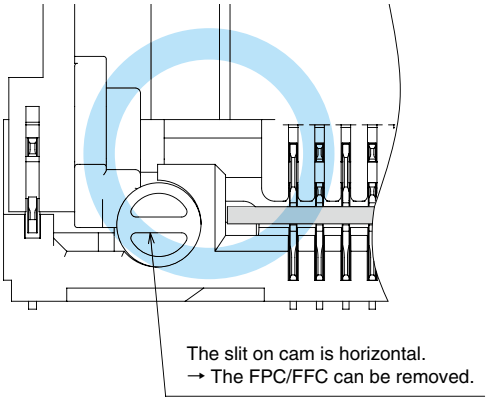

【Fig. 27】

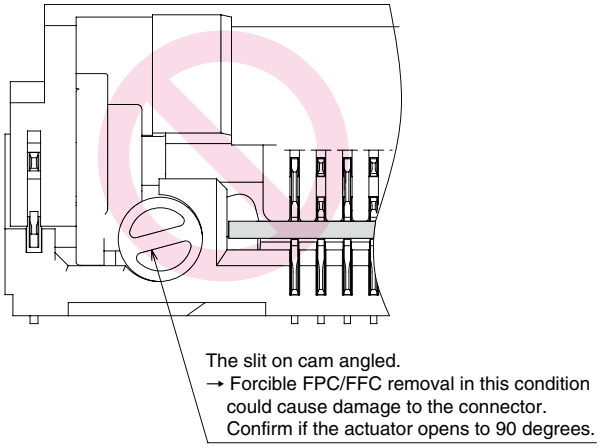

【Fig. 28】

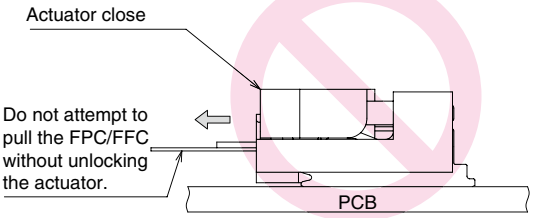

【Fig. 29】

【Precautions for PCB layout】

Depending on a FPC/FFC wiring, load is applied to the connector, and contact failure (Mating failure, FPC/FFC pattern breakage, etc.) may occur.
To prevent a failure, take the following notes into a consideration during mechanism design.

[Caution]

◆Avoid applying forces to FPC/FFC in vertical or horizontal directions.
In addition, avoid pulling up and down on the FPC/FFC. [Fig.30]

◆During FPC/FFC wiring, avoid pulling FPC/FFC, and route the wire FPC/FFC with slack.
In this regard, the stiffener is parallel to the PCB. [Fig.31]
Do not bend the FPC/FFC excessively near the connector during use, or it may cause contact failure or FPC/FFC breakage. [Fig.32]
Fixing the FPC/FFC is recommended to prevent these failures.

◆Make sure to provide enough space for FPC/FFC assembly in order to prevent sharp angle insertion.
A FPC/FFC that is too short is difficult to assemble.

◆Do not mount other components touching to the FPC/FFC underneath stiffener. [Fig.33]

◆Refer to recommended layout on the page 3 for FPC/FFC design.
In addition, please consult FPC/FFC suppliers for the flexibility of bending FPC/FFC.

◆Please design the PCB and component layout to provide enough space for actuator operation.

Aug.1.2026 Copyright 2026 HIROSE ELECTRIC CO., LTD. All Rights Reserved.

Downloaded from Arrow.com.

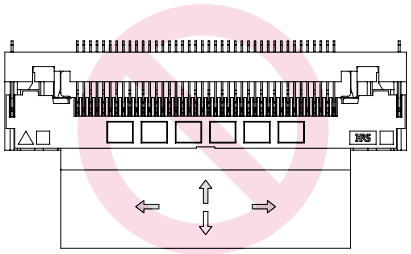

【Fig. 30】

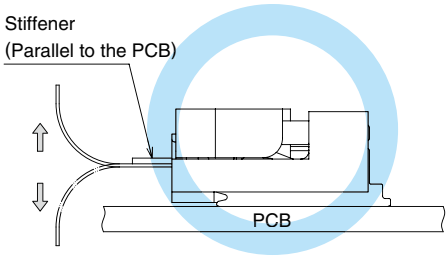

【Fig. 31】

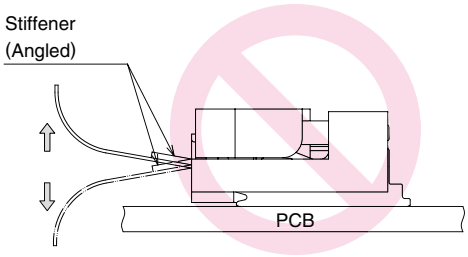

【Fig. 32】

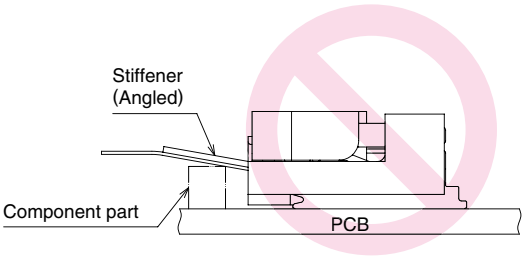

【Fig. 33】

【Instructions for mounting on the PCB】

Follow the instructions shown below when mounting on the PCB.

[Caution]

◆Refer to recommended layouts on the page 3 for PCB and stencil design.
◆Prevent warpage of PCB, where possible, since it can cause soldering failure
; Even with 0.1mm max coplanarity.
◆A stiffener must be provided on mounted side of FPC for easy handling.
Confirmation is required prior to mass production.
◆When unreel or pick and place the connector,
do not apply any external force to the connector over 1N to prevent connector damage.
◆Apply reflow temperature profile within the specified conditions.
In individual applications, the actual temperature may vary, depending on
solder paste type, volume/thickness and PCB size/thickness.
Confirmation is required prior to mass production.

Aug.1.2026 Copyright 2026 HIROSE ELECTRIC CO., LTD. All Rights Reserved.

Downloaded from Arrow.com.

【Instructions for PCB handling after mounting the connector】

Follow the instructions shown below when handling the PCB after mounting the connector.

[Caution]

◆Split PCBs with multiple piece production. Screw down PCB etc.
Do not apply any force to the connectors during the process, or connectors could be damaged.

◆The bend of a 100mm wide PCB should be 1 mm or less.
Excessive bending of PCB may cause malfunction or damage to the connector. [Fig.34]

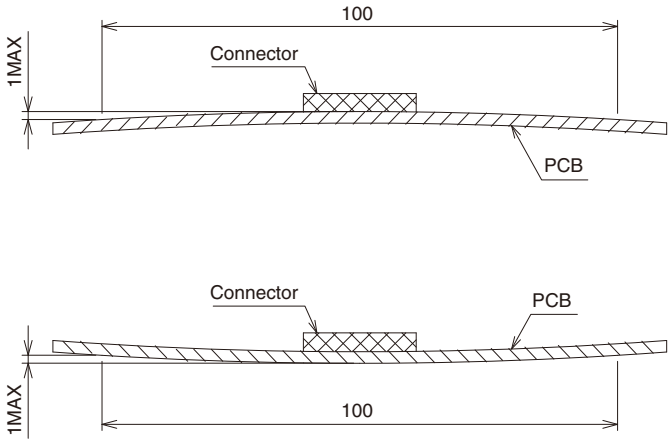

【Fig. 34】

【Instructions for manual soldering】

Follow the instructions shown below for manual soldering such as repair work.

[Caution]

◆Do not perform soldering operations with the FPC/FFC inserted in the connector.

◆The soldering iron must contact only the terminals.
Do not touch any other part of the connector with the soldering iron.

◆Do not apply excessive solder (or flux).
If excessive solder (or flux) is applied on the terminals, solder or flux may adhere to the contacts or rotating parts of the actuator, resulting in the poor contact or rotation failure of the actuator.
Do not use excessive solder on the metal fittings as this may interfere with the actuator rotation and cause connector damage.

Aug.1.2026 Copyright 2026 HIROSE ELECTRIC CO., LTD. All Rights Reserved.

Creative Links to World Electronics ®
HRS
HIROSE ELECTRIC CO.,LTD.
6-3,Nakagawa Chuoh-2-Chome,Tsuzuki-Ku,Yokohama-Shi 224-8540,JAPAN
TEL: +81-45-620-3526 Fax: +81-45-591-3726
http://www.hirose.com
http://www.hirose-connectors.com

HRS The characteristics and the specifications contained herein are for reference purpose. Please refer to the latest customer drawings prior to use.
The contents of this catalog are current as of date of 3/2014. Contents are subject to change without notice for the purpose of improvements.
Downloaded from Arrow.com.