MICRO SWITCH
a Honeywell Division
FED.MFG.CODE 91929

SWITCH – BASIC

CATALOG LISTING
BZ-2RW822551529T-S

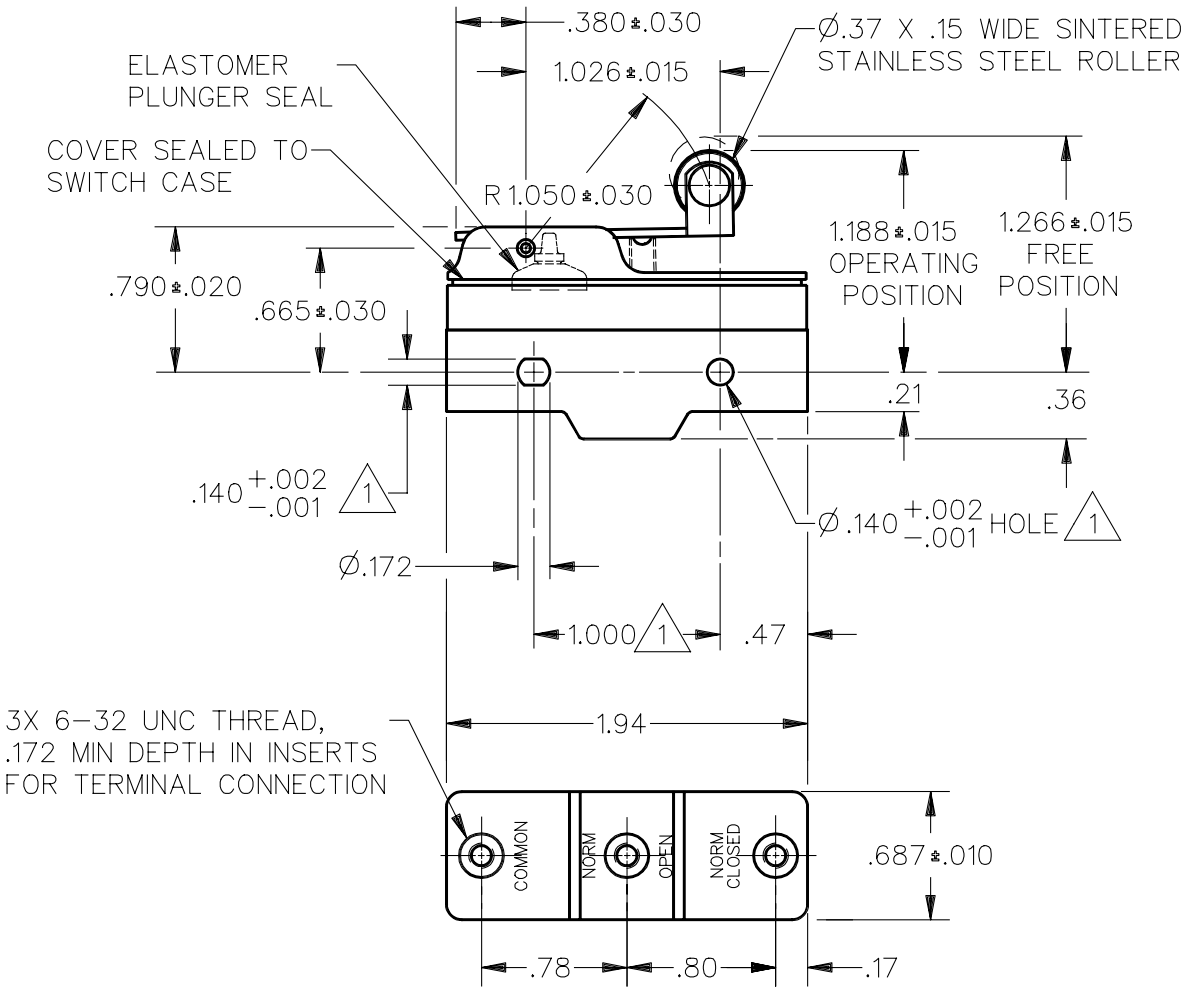

NOTE
1. MOUNTING HOLES WILL ACCEPT PINS OR SCREWS OF Ø.139 MAX ON 1.000±.002 CENTERS
2 – SEALED CONSTRUCTION PROVIDES SPLASH RESISTANCE
3 – 3X TERMINAL SCREWS AND LOCKWASHER FURNISHED UNASSEMBLED

ANSI Y14.5M–1982 APPLIES

THIS DRAWING COVERS A PROPRIETARY ITEM AND IS THE PROPERTY OF MICRO SWITCH, A DIVISION OF HONEYWELL. THIS DRAWING IS NOT TO BE COPIED OR USED WITHOUT THE APPROVAL OF MICRO SWITCH.

THIRD ANGLE PROJECTION

CHARACTERISTICS	ELECTRICAL DATA	SCALE FULL / DO NOT SCALE PRINT
OPERATING FORCE — — — 6 OZ MAX	CONTACT ARRANGEMENT S P D T	UNLESS OTHERWISE SPECIFIED TOLERANCES ARE
RELEASE FORCE — — — 1 1/2 OZ MIN		ONE PLACE (.0) ±.030
DIFFERENTIAL TRAVEL — — — .003–.020	L9 10A 125, 250 OR 480 VAC 1/2A 125 VDC, 1/4A 250 VDC	TWO PLACE (.00) ±.015
OVERTRAVEL — — — — — — .094 MIN		THREE PLACE (.000) ±.005
	L288	ANGLES ±
		WEIGHT .076 LB

CATALOG LISTING BZ-2RW822551529T-S
PAGE 1 OF 1
ISSUE 5
REPLACES X98257-BZ
RELEASE NO. PR-21314

REVISIONS		
A	CO-80986	LJF 7 JUN 95
B	CO-82886	JJA 8 MAY 96
C	CO-92493	S A V 12 FEB 98
D	C093346	D L T 14 AUG 98

DRAWN	M A M	26 OCT 94
CHECK	W J C	31 OCT 94
CHECK		
CHECK		
CHECK		

DDM/CAD

Downloaded from Arrow.com.