LF21064N

High-Side / Low-Side Gate Driver

Features

- Floating high-side driver in bootstrap operation to 600V
- Drives two N-channel MOSFETs or IGBTs in a half bridge configuration
- Outputs tolerant to negative transients
- Wide logic and low side gate driver supply voltage: 10V to 20V
- Wide logic supply voltage offset voltage: -5V to 5V
- Logic input (HIN and LIN) 3.3V capability
- Schmitt triggered logic inputs with internal pull down
- Under Voltage Lockout (UVLO) for high and low side drivers
- Extended temperature range:-40°C to +125°C

Description

LF21064N is a high voltage, high speed gate driver capable of driving N-channel MOSFETs and IGBTs in a half bridge configuration. The high voltage technology enables the LF21064N's high side to switch to 600V in a bootstrap operation.

LF21064N logic inputs are compatible with standard TTL and CMOS levels (down to 3.3V) to interface easily with controlling devices. The driver outputs feature high pulse current buffers designed for minimum driver cross conduction. LF21064N is offered in SOIC(N)-14 packages and operates over the extended temperature range of -40°C to +125°C

Applications

- DC-DC Converters
- AC-DC Inverters
- Motor Controls
- Class D Power Amplifiers

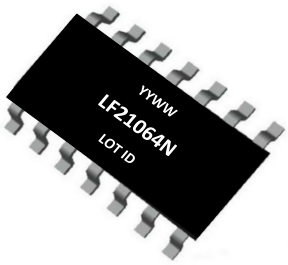

SOIC(N)-14

Typical Application

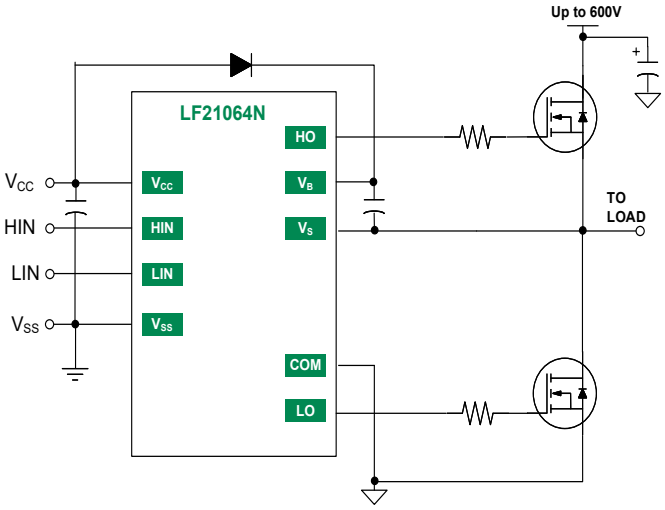

Ordering Information

Year Year Week Week

Part#	Package	Pack / Qty	Mark
LF21064NTR	SOIC(N)-14	T&R / 2500	YYWW LF21064N LOT ID

Downloaded from Arrow.com.

1 Specification

1.1 Pin Diagrams

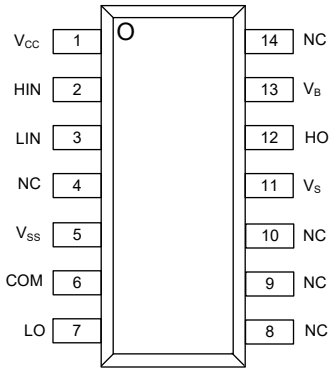

Top View: SOIC(N)-14,

LF21064N

1.2 Pin Descriptions

Pin#	Pin Name	Pin Type	Pin Description
1	V_{CC}	Power	Low-side and logic fixed supply
2	HIN	Input	Logic input for high-side gate driver output, in phase with HO (referenced to VSS).
3	LIN	Input	Logic input for low side gate driver output, in phase with LO (referenced to VSS)
4	NC	No connect	Not connected internally
5	VSS	Power	Logic ground
6	COM	Power	Low-side return
7	LO	Output	Low-side gate drive output
8, 9, 10	NC	No Connect	Not connected internally
11	V_S	Power	High-side floating supply return
12	HO	Output	High-side gate drive output
13	V_B	Power	High-side floating supply
14	NC	No connect	Not connected internally

Downloaded from Arrow.com.

1.3 Absolute Maximum Ratings

Parameter	Symbol	Min	Max	Unit
High side floating supply voltage	V_B	-0.3	+624	V
High side floating supply offset voltage	V_S	V_B-24	V_B+0.3	V
High side floating output voltage	V_{HO}	V_S-0.3	V_B+0.3	V
Offset supply voltage transient	dV_S/dt	--	50	V/ns
Low side fixed supply voltage	V_{CC}	-0.3	+24	V
Low side output voltage	V_{LO}	-0.3	V_{CC}+0.3	V
Logic supply offset voltage	V_{SS}	V_{CC}-24	V_{CC}+0.3	V
Logic input voltage (HIN and LIN)	V_{IN}	V_{SS}-0.3	V_{CC}+0.3	V
Package power dissipation	P_D	--	1.0	W
Junction Operating Temperature	T_J	--	+150	°C
Storage Temperature	T_{STG}	-55	+150	°C

Unless otherwise specified all voltages are referenced to COM . All electrical ratings are at T_A = 25 °C

Stresses beyond those listed under "Absolute Maximum Ratings" may cause permanent damage to the device. These are stress ratings only, and functional operation of the device at these or any other conditions beyond those indicated in the operational sections of the specifications is not implied. Exposure to absolute maximum rating conditions for extended periods may affect device reliability.

1.4 Thermal Characteristics

Parameter	Symbol	Rating	Unit
Junction to ambient	θ_{JA}	120	°C/W

When mounted on a standard JEDEC 2-layer FR-4 board - JESD51-3

Downloaded from Arrow.com.

1.5 Recommended Operating Conditions

Parameter	Symbol	Min	Max	Unit
High side floating supply absolute voltage	V_B	$V_S + 10$	$V_S + 20$	V
High side floating supply offset voltage	V_S	***NOTE 1***	600	V
High side floating output voltage	V_{HO}	V_S	V_B	V
Low side fixed supply voltage	V_{CC}	10	20	V
Low side output voltage	V_{LO}	0	V_{CC}	V
Logic input voltage (HIN & LIN)	V_{IN}	V_{SS}	$V_{SS} + 5$	V
Logic ground	V_{SS}	-5	5	V
Ambient temperature	T_A	-40	125	°C

Unless otherwise specified all voltages are referenced to COM

NOTE1 *High-side driver remains operational for V_S transients down to -5V*

Downloaded from Arrow.com.

1.6 DC Electrical Characteristics

V_{cc}=V_{BS}= 15V, T_A = 25 °C and V_{SS} =V_{COM} = 0V , unless otherwise specified.

The V_{IN} and I_{IN} parameters are applicable to both logic input pins: HIN and LIN . The V_0 and I_0 parameters are applicable to the respective output pins: HO and LO and are referenced to COM

Parameter	Symbol	Conditions	MIn	Typ	Max	Unit
Logic "1" input voltage	V_{IH}	V_{CC} = 10 V to 20 V ***Note2***	2.5	--	--	V
Logic "0" input voltage	V_{IL}		--	--	0.6	
Logic input voltage hysteresis	$V_{IN(HYS)}$	--	--	0.3	--	
High level output voltage, V_{BIAS} - V_O	V_{OH}	I_O = 2mA	--	0.05	0.2	
Low level output voltage, V_O	V_{OL}	I_O = 2mA	--	0.02	0.1	
Offset supply leakage current	I_{LK}	VB = VS = 600V	--	--	50	µA
Quiescent V_{BS} supply current	I_{BSQ}	V_{IN} = 0V or 5V	20	75	130	
Quiescent V_{CC} supply current	I_{CCQ}	V_{IN} = 0V or 5V	60	120	180	
Logic "1" input bias current	I_{IN+}	V_{IN} = 5V	--	5	20	
Logic "0" input bias current	I_{IN-}	V_{IN} = 0V	--	--	5	
V_{BS} UVLO off positive going threshold	V_{BSUV+}	--	8.0	8.9	9.8	V
V_{BS} UVLO enable negative going threshold	V_{BSUV-}	--	7.4	8.2	9.0	
V_{CC} UVLO hysteresis	$V_{CCUV(HYS)}$	--	0.3	0.7	--	
V_{CC} UVLO off positive going threshold	V_{CCUV+}	--	8.0	8.9	9.8	
V_{CC} UVLO enable negative going threshold	V_{CCUV-}	--	7.4	8.2	9.0	
V_{BS} UVLO hysteresis	$V_{BSUV(HYS)}$	--	0.3	0.7	--	
Output high short circuit pulsed current	I_{O+}	V_O = 0V, t ≤ 10 µs	130	290	--	mA
Output low short circuit pulsed current	I_{O-}	V_O = 15V, t ≤ 10 µs	270	600	--	

***NOTE2** For optimal operation, it is recommended the input pulse (to HIN and LIN) should have a minimum amplitude of 2.5V with a minimum pulse width of 440ns.*

Downloaded from Arrow.com.

1.7 AC Electrical Characteristics

$V_{CC} = V_{BS} = 15V$, $V_{SS} = V_{COM} = 0V$, $C_L = 1000pF$, and $T_A = 25\,°C$, unless

Parameter	Symbol	Conditions	Min	Typ	Max	Unit
Turn-on propagation delay	t_{ON}	$V_S = 0V$	--	220	300	ns
Turn-off propagation delay	t_{OFF}	$V_S = 0\,V$ or $600V$	--	200	280	
Propagation delay matching	t_{DM}	--	--	0	30	
Turn-on rise time	t_r	$V_S = 0V$	--	100	220	
Turn-off fall time	t_f	$V_S = 0V$	--	35	80	

2 Functional Description

2.1 Functional Block Diagram

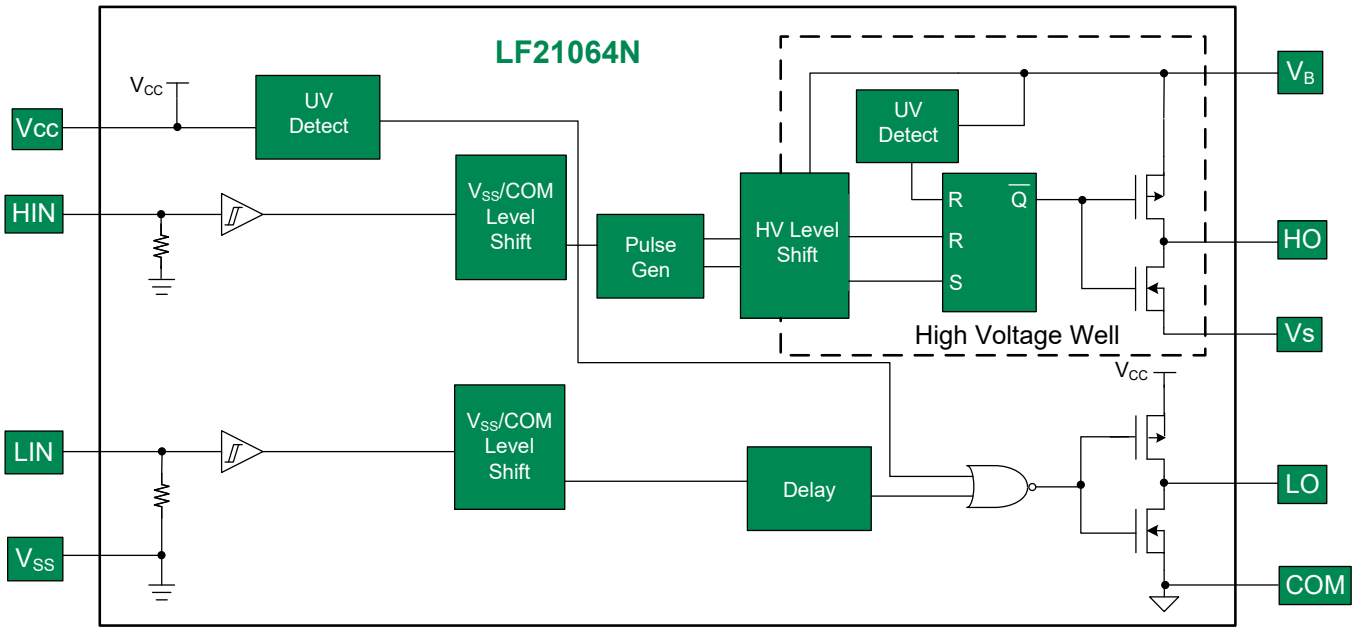

Downloaded from Arrow.com.

2.2 Timing Waveforms

Figure 1. Input / Output Logic Diagram

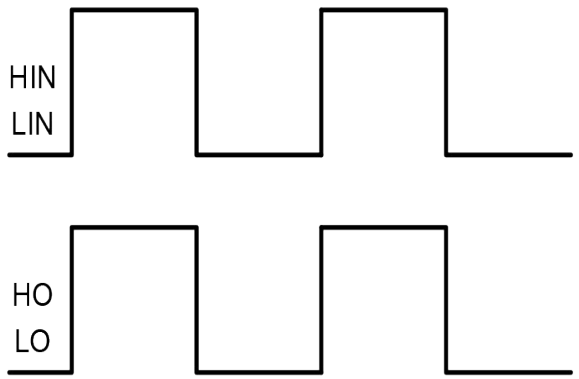

Figure 2. Inout-to-Output Delay Timing Diagram

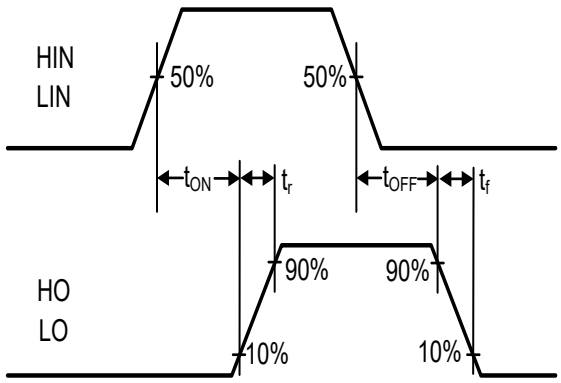

Figure 3. Delay Matching Waveform

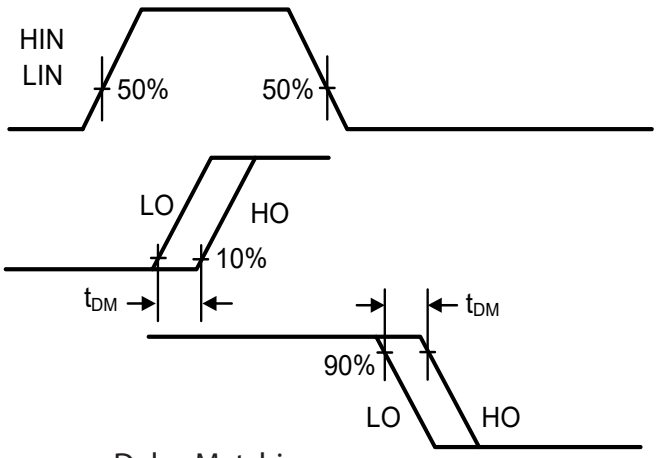

Delay Matching :

$t_{DM\ OFF} = |t_{OFF\ LO} - t_{OFF\ HO}|$

$t_{DM\ ON} = |t_{ON\ LO} - t_{ON\ HO}|$

Downloaded from Arrow.com.

2.3 Application Information

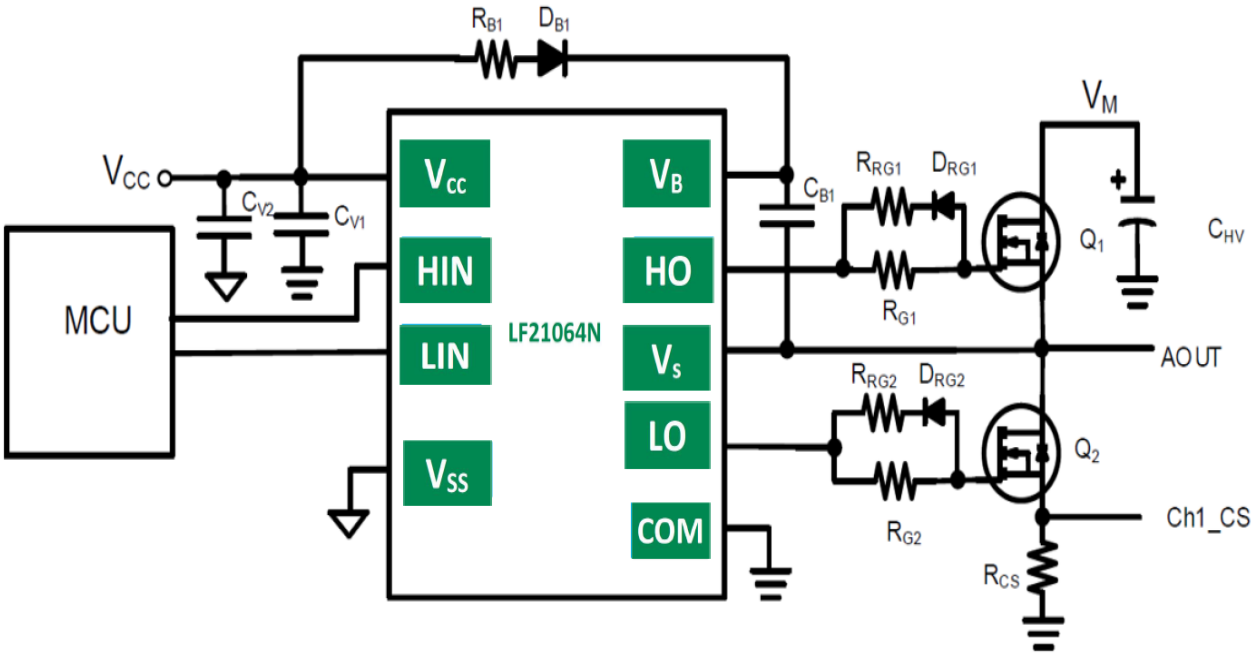

Figure 4. Single phase (of four) for Stepper motor driver application using the LF21064N

- RRG1 and RRG2 values are typically between 0Ω and 10Ω, exact value decided by MOSFET junction capacitance and drive current of gate driver; 10Ω is used in this example.

- It is **highly recommended** that the input pulse (to HIN and LIN) should have a minimum amplitude of 2.5V (for V_{CC}=15V) with a minimum pulse width of 440ns.

- RG1 and RG2 values are typically between 10Ω and 100Ω, exact value decided by MOSFET junction capacitance and drive current of gate driver; 50Ω is used in this example.

- RB1 value is typically between 3Ω and 20Ω, exact value depending on bootstrap capacitor value and amount of current limiting required for bootstrap capacitor charging; 10Ω is used in this example. Also DB should be an ultra fast diode of 1A rating minimum and voltage rating greater than system operating voltage.

Downloaded from Arrow.com.

3 Performance Data

Unless otherwise noted $V_{CC} = V_{BS} = 15V$, $T_A = 25\ °C$, $V_{SS} = V_{COM} = 0V$ and values are typical.

Figure 5. Turn-on Propagation Delay vs. Supply Voltage

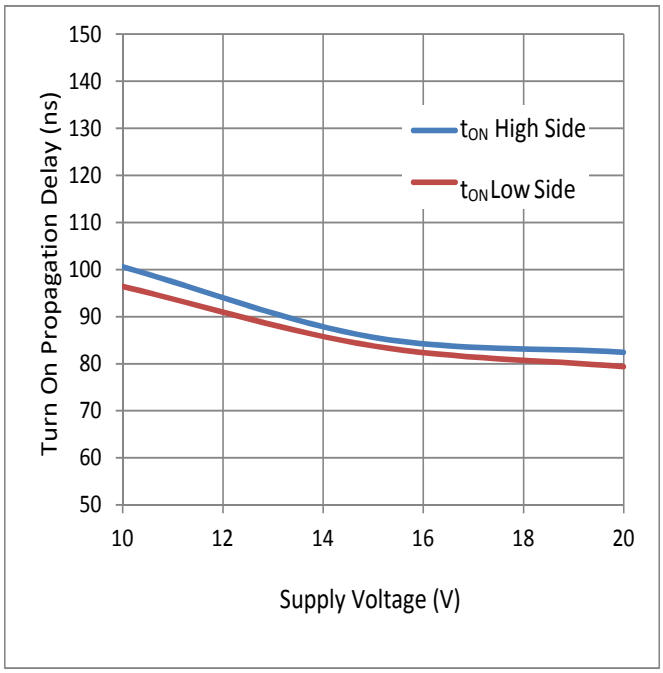

Figure 6. Turn-on Propagation Delay vs. Temperature

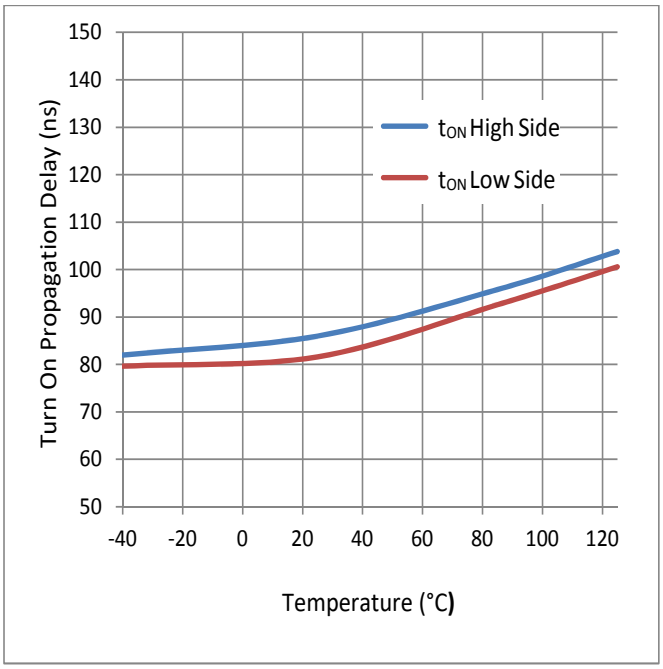

Figure 7. Turn-off Propagation Delay vs. Supply Voltage

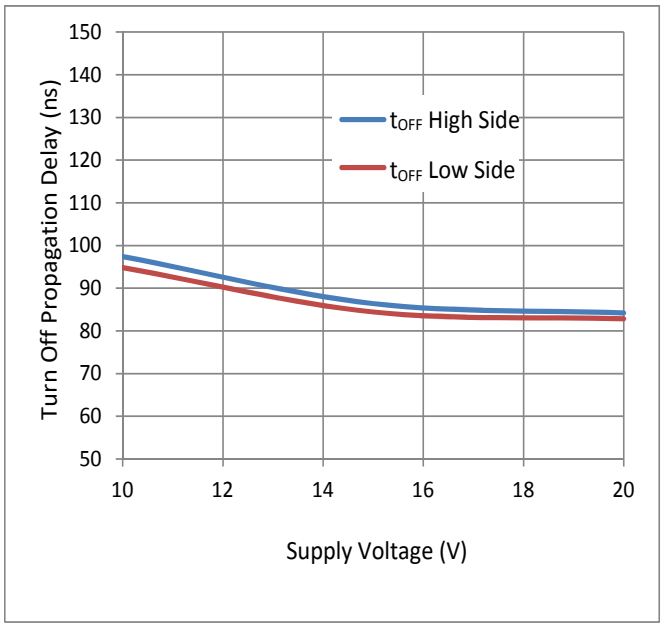

Figure 8. Turn-off Propagation Delay vs. Temperature

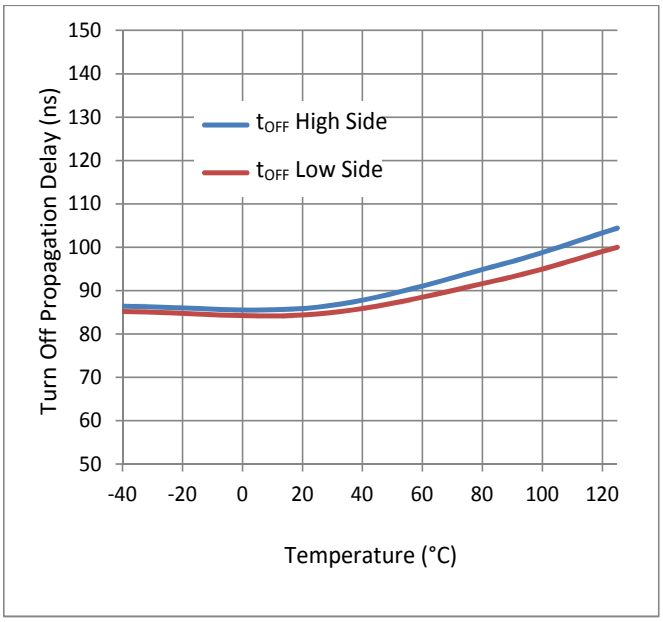

Downloaded from Arrow.com.

Figure 9. Rise Time vs. Supply Voltage

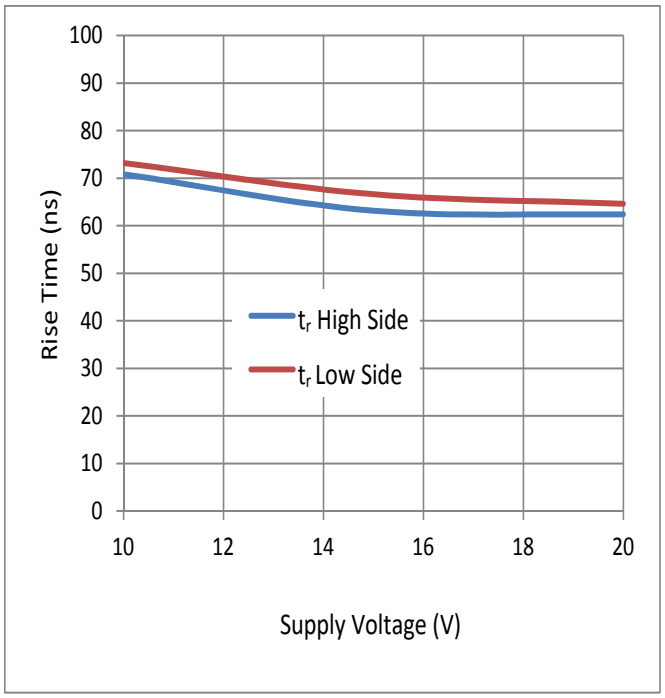

Figure 10. Rise Time vs. Temperature

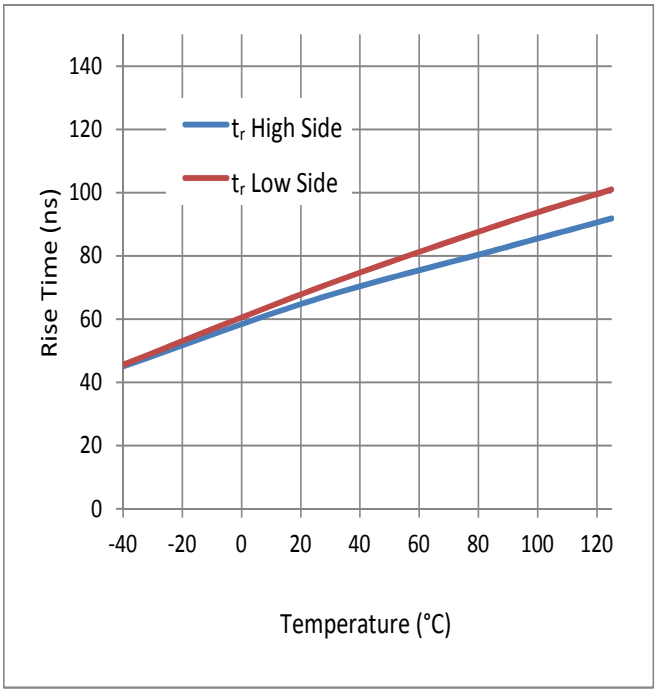

Figure 11. Fall Time vs. Supply Voltage

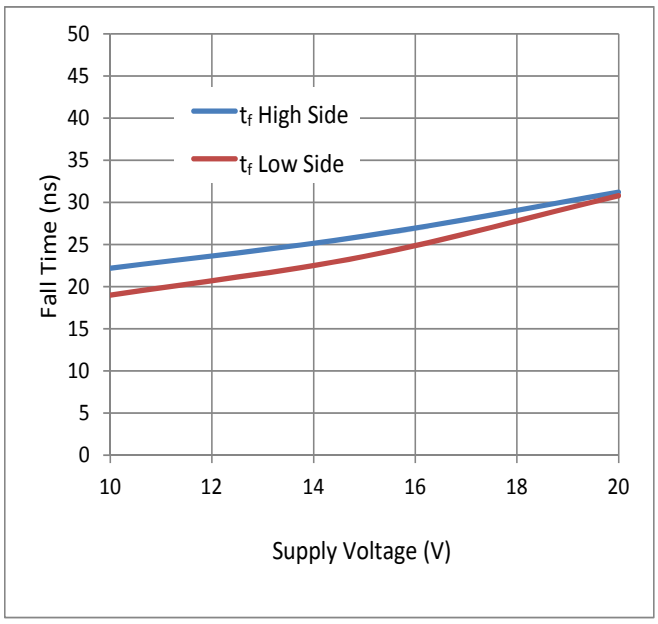

Figure 12. Fall Time vs. Temperature

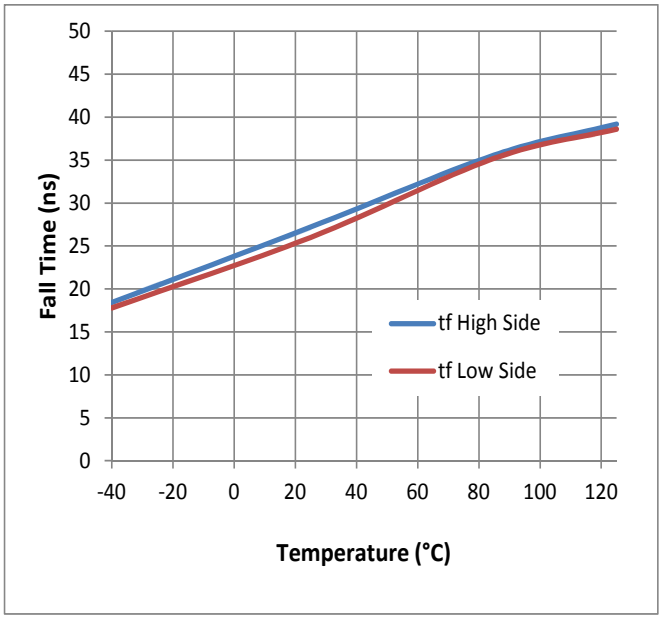

Downloaded from Arrow.com.

Figure 13. Quiescent Current vs. Supply Voltage

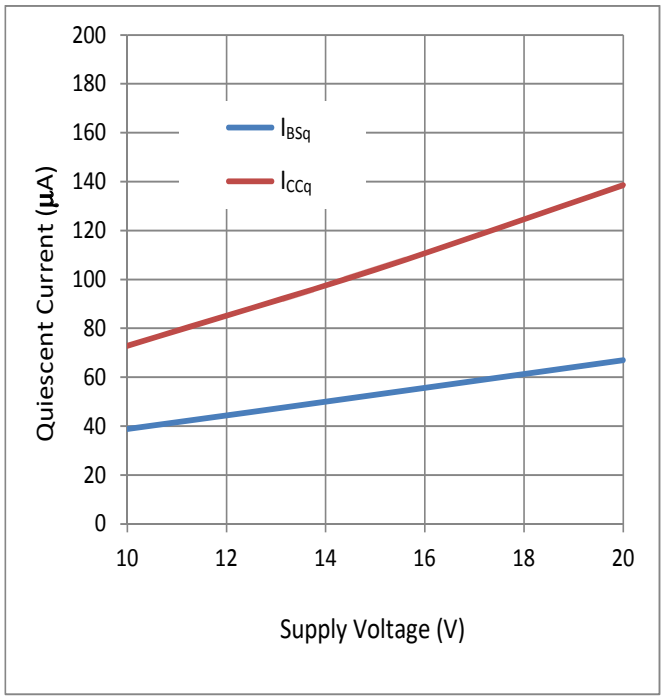

Figure 14. Quiescent Current vs. Temperature

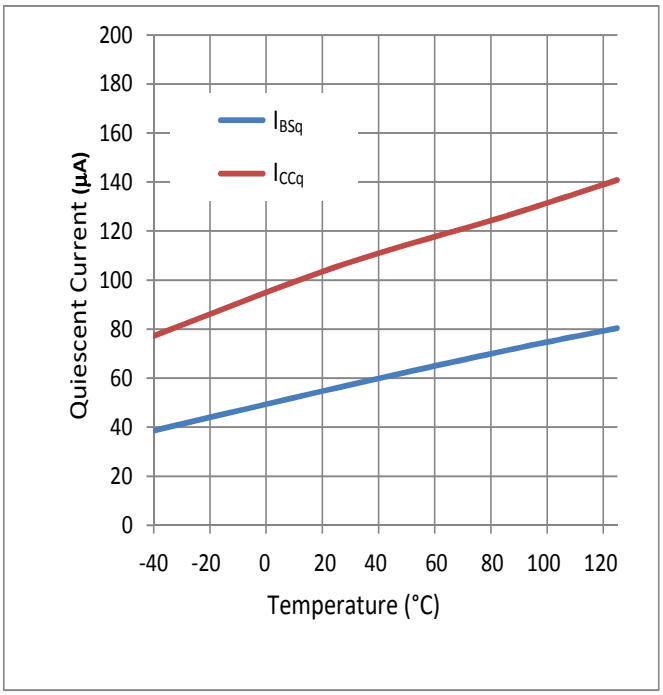

Figure 15. Delay Matching vs. Supply Voltage

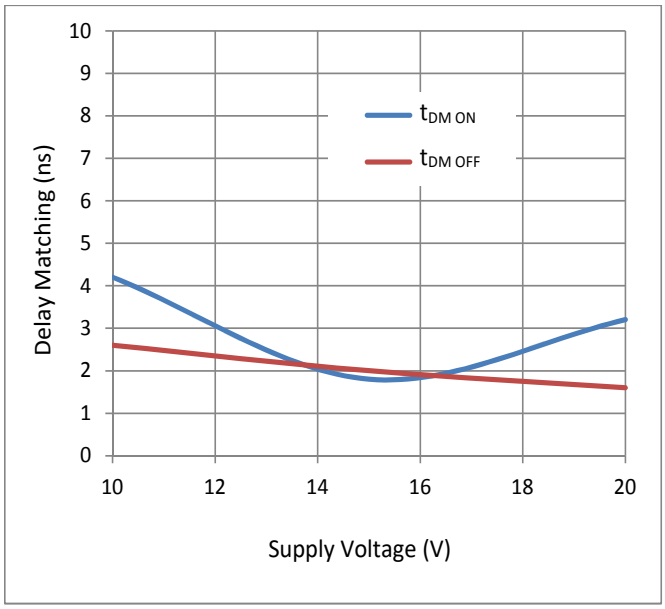

Figure 16. Delay Matching vs. Temperature

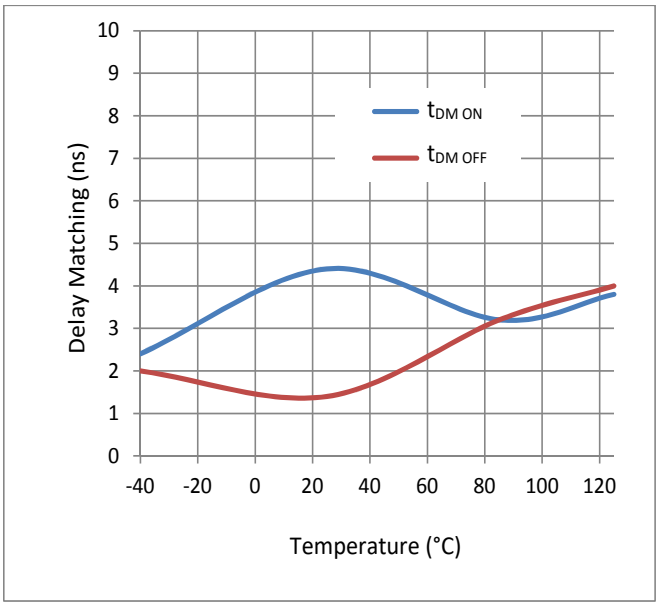

Downloaded from Arrow.com.

Figure 17. Output Source Current vs. Supply Voltage

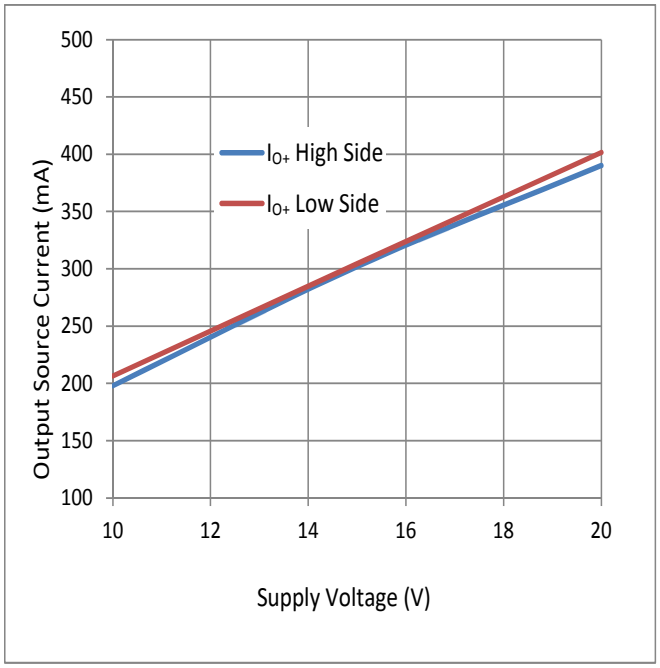

Figure 18. Output Source Current vs. Temperature

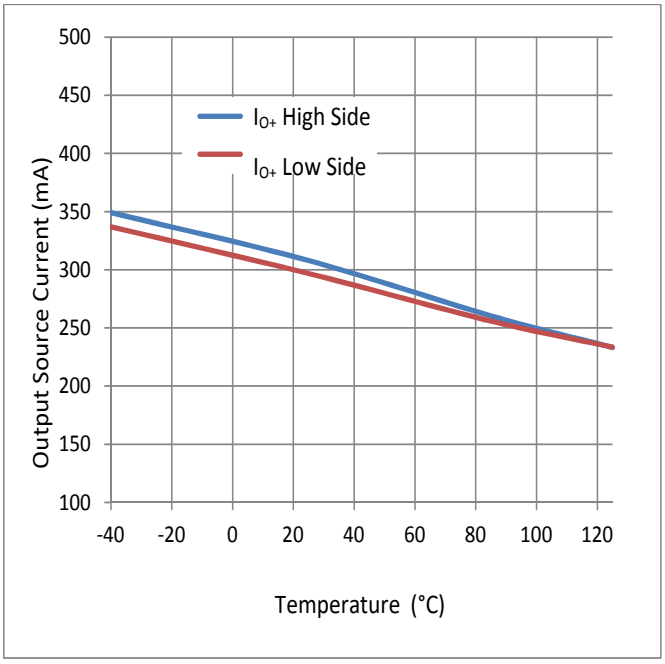

Figure 19. Output Sink Current vs. Supply Voltage

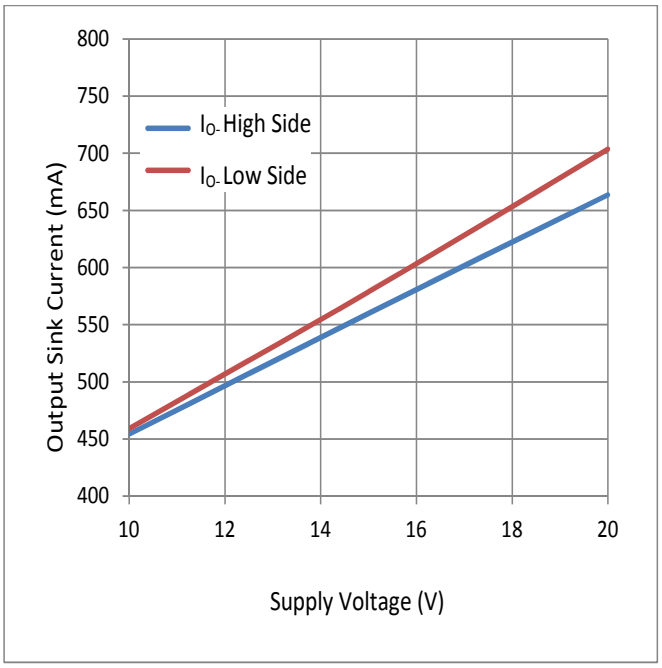

Figure 20. Output Sink Current vs. Temperature

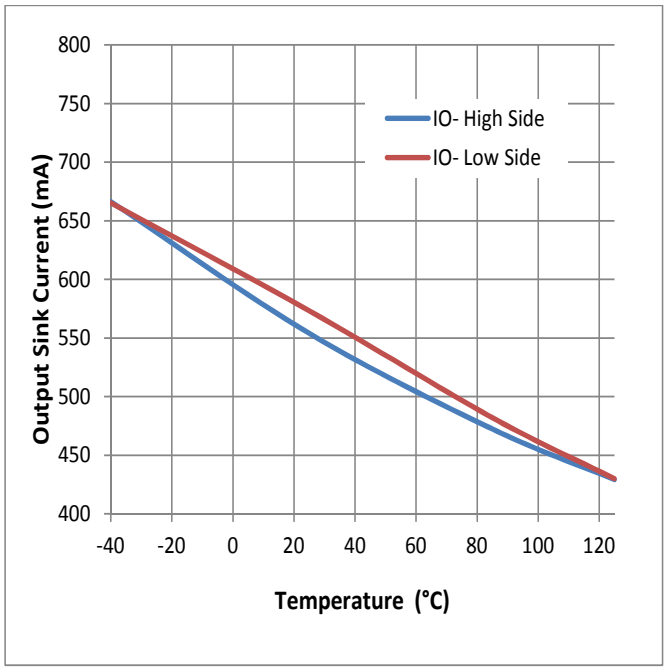

Downloaded from Arrow.com.

Figure 21. Logic 1 Input Voltage vs. Supply Voltage

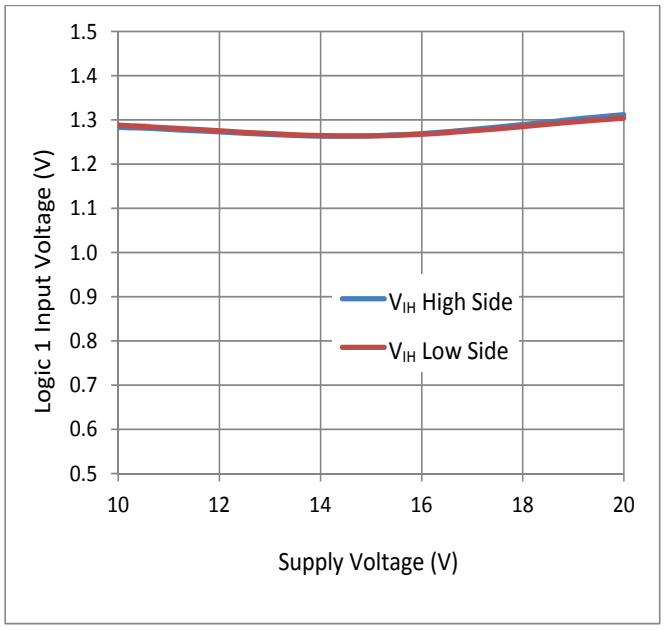

Figure 22. Logic 1 Input Voltage vs. Temperature

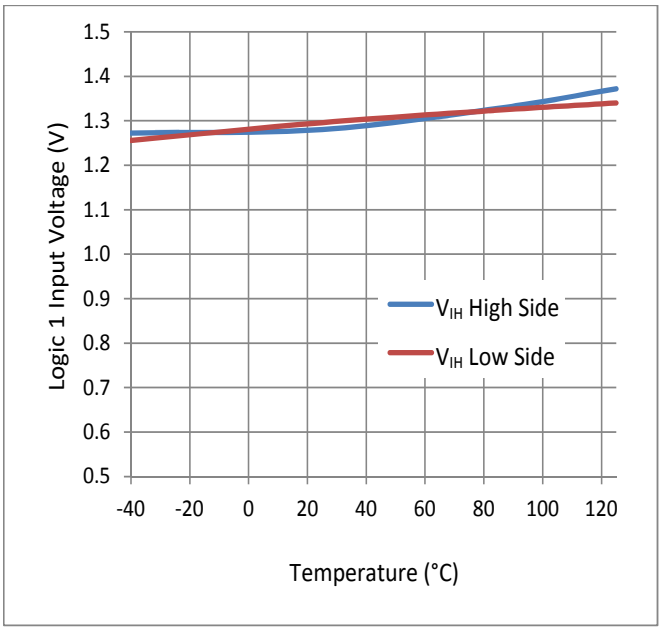

Figure 23. Logic 0 Input Voltage vs. Supply Voltage

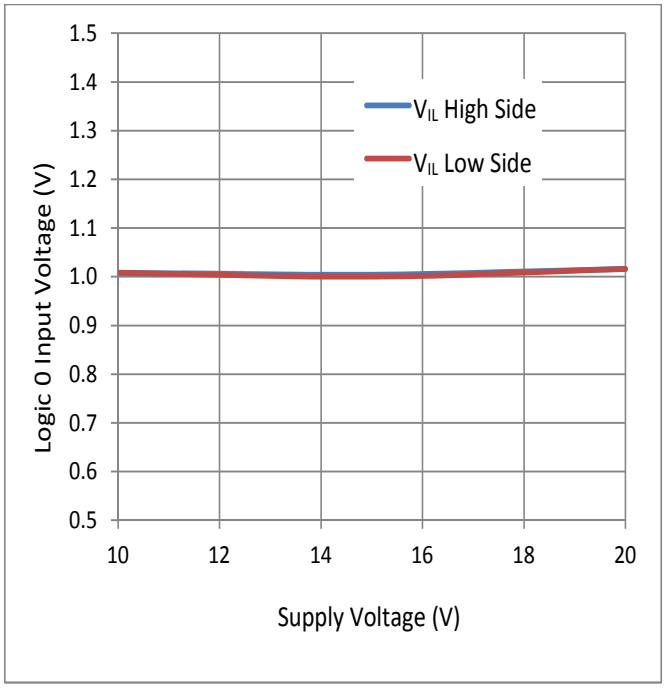

Figure 24. Logic 0 Input Voltage vs. Temperature

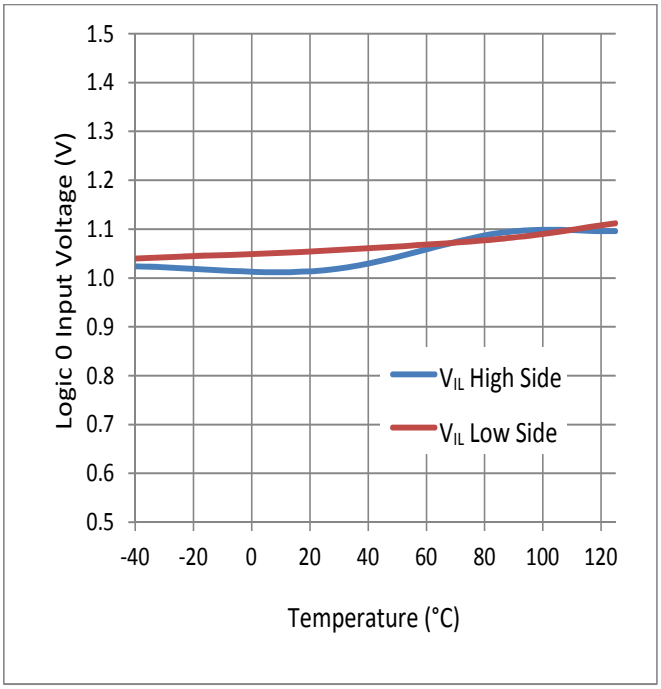

Downloaded from Arrow.com.

Figure 25. V_{CC} UVLO vs. Temperature

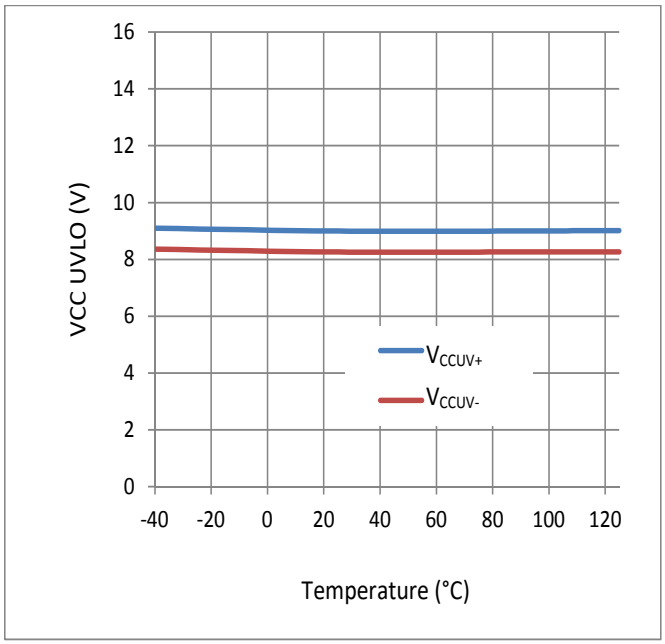

Figure 26. V_{BS} UVLO vs. Temperature

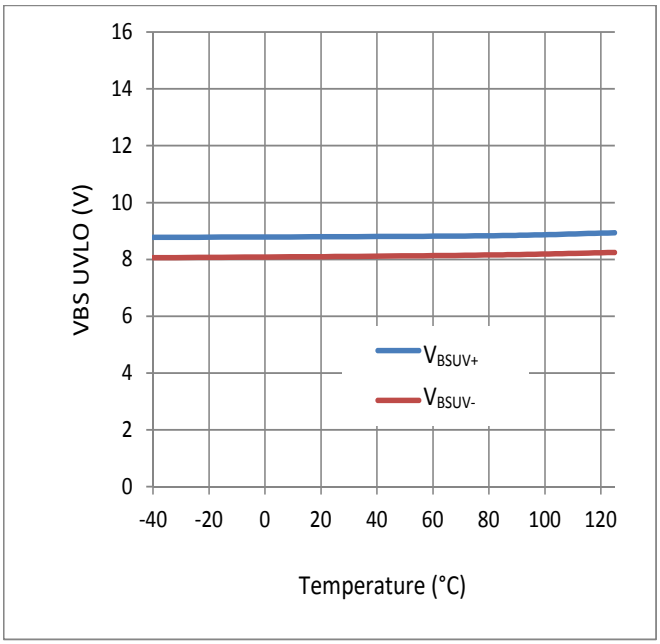

Figure 27. Offset Supply Leakage Current Temperature

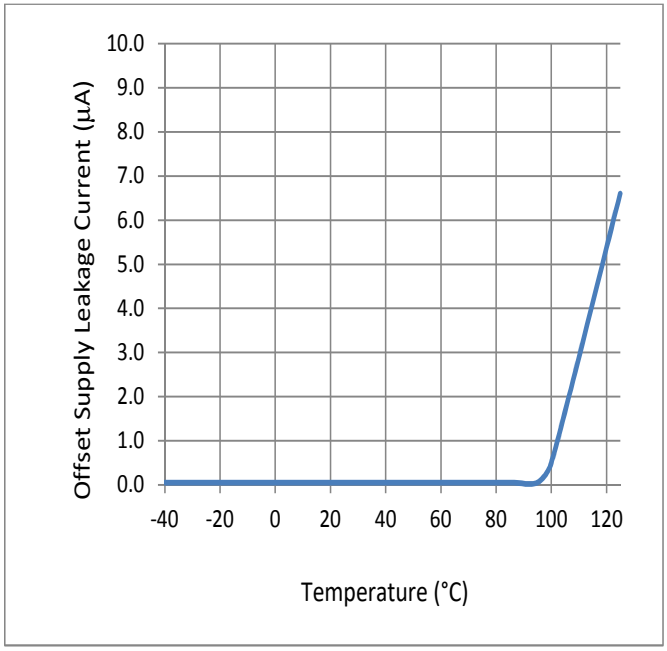

Downloaded from Arrow.com.

4 Manufacturing Information

4.1 Moisture Sensitivity

All plastic encapsulated semiconductor packages are susceptible to moisture ingression. Littelfuse Integrated Circuits Division classified all of its plastic encapsulated devices for moisture sensitivity according to the latest version of the joint industry standard, **IPC/JEDEC J-STD-020**, in force at the time of product evaluation. We test all of our products to the maximum conditions set forth in the standard, and guarantee proper operation of our devices when handled according to the limitations and information in that standard as well as to any limitations set forth in the information or standards referenced below.

Failure to adhere to the warnings or limitations as established by the listed specifications could result in reduced product performance, reduction of operable life, and/or reduction of overall reliability.

This product carries a **Moisture Sensitivity Level (MSL)** rating as shown below, and should be handled according to the requirements of the latest version of the joint industry standard **IPC/JEDEC J-STD-033.**

Device	Moisture Sensitivity Level (MSL) Classification
LF21064N	MSL3

4.2 ESD Sensitivity

This product is **ESD Sensitive**, and should be handled according to the industry standard **JESD-625**.

4.3 Reflow Profile

Provided in the table below is the IPC/JEDEC J-STD-020 Classification Temperature (T_C) and the maximum dwell time the body temperature of these surface mount devices may be (T_C - 5)°C or greater. The Classification Temperature sets the Maximum Body Temperature allowed for these devices during reflow soldering processes.

Device	Classification Temperature(Tc)	Dwell Time (tp)	Max Reflow Cycles
LF21064N	260°C	30 seconds	3

Downloaded from Arrow.com.

4.4 Board Wash

Littelfuse recommends the use of no-clean flux formulations. Board washing to reduce or remove flux residue following the solder reflow process is acceptable provided proper precautions are taken to prevent damage to the device. These precautions include but are not limited to: using a low pressure wash and providing a follow up bake cycle sufficient to remove any moisture trapped within the device due to the washing process. Due to the variability of the wash parameters used to clean the board, determination of the bake temperature and duration necessary to remove the moisture trapped within the package is the responsibility of the user (assembler). Cleaning or drying methods that employ ultrasonic energy may damage the device and should not be used. Additionally, the device must not be exposed to halide flux or solvents.

Downloaded from Arrow.com.

5 Package Dimensions: SOIC(N)-14

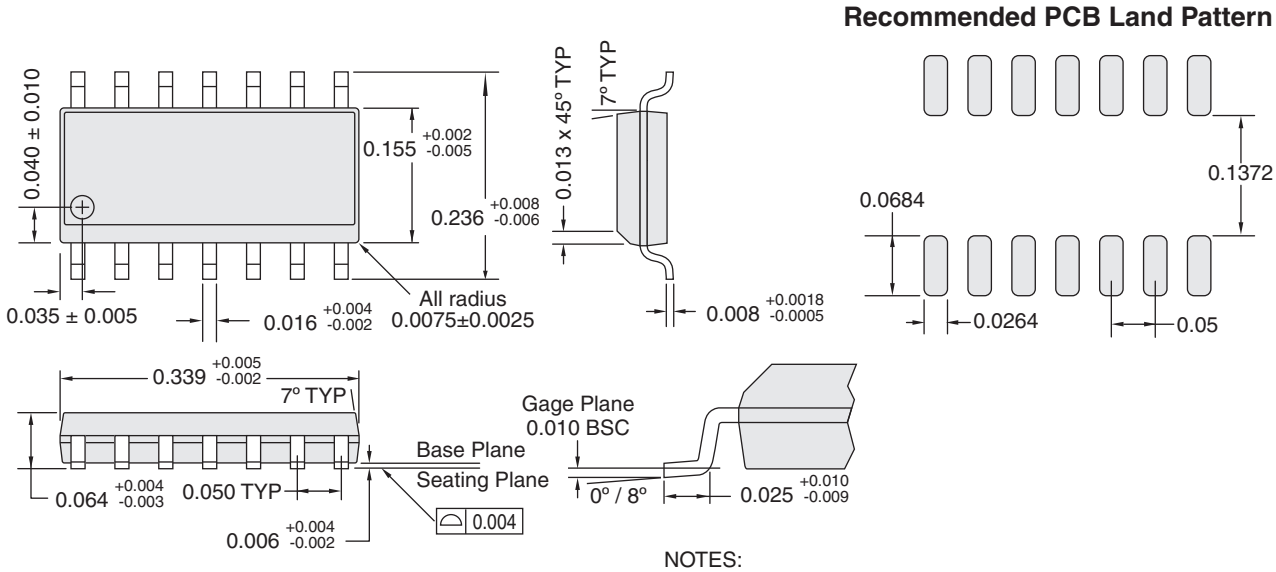

NOTES:
1. Controlling dimension: inches
2. Molded package dimensions do not include mold flash or protrusion. Mold flash or protrusion shall not exceed 6 mils per side.
3. Formed leads shall be planar with respect to one another within 4 mils referenced from the seating plane.
4. The bottom package lead side may be bigger than the top package lead side by 4 mils (2 mils per side). Bottom package dimension shall follow dimension stated in this drawing.
5. This drawing conforms to JEDEC REF. MS-012 Rev. E.

Important Notice

Disclaimer Notice - Information furnished is believed to be accurate and reliable. However, users should independently evaluate the suitability of and test each product selected for their own applications. Littelfuse products are not designed for, and may not be used in, all applications. Read complete Disclaimer Notice at **https://www.littelfuse.com/disclaimer-electronics.**

Specification: DS-LF21064N-R01
©Copyright 2021, Littelfuse, Inc.
All rights reserved.
Printed in USA.
09 / 30 / 2021

Downloaded from Arrow.com.