MLX90421

Triaxis® Position Sensor IC
Datasheet

Features and Benefits

- Triaxis® Hall Technology
- On Chip Signal Processing for Robust Absolute Position Sensing
- ISO26262 ASIL B Safety Element out of Context
- AEC-Q100 Qualified (Grade 0)
- Programmable Measurement Range
- Programmable Linear Transfer Characteristic with up to 17 points
- Ratiometric analog or PWM output
- Packages RoHS compliant
  - Single Die - SOIC-8 (DC)
  - Dual Die (redundancy) - TSSOP-16 (GO)
  - Single Die PCB-less solution DMP-4 (VS)
  - Single Die PCB-less solution SMP-3 (VE)
  - Dual Die PCB-less solution SMP-4 (VD)

SOIC-8 (DC)

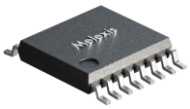

TSSOP-16 (GO)

DMP-4 (VS)

SMP-3 (VE)

SMP-4 (VD)

Application Examples

- Absolute Rotary Position Sensor
- Pedal Position Sensor
- Throttle Position Sensor
- Ride Height Position Sensor
- Transmission Position Sensor
- Absolute Linear Position Sensor
- Steering Wheel Position Sensor
- Float-Level Sensor
- Non-Contacting Potentiometer

Description

The MLX90421 is a monolithic magnetic position sensor IC. It consists of a Triaxis® Hall magnetic front end, an analog to digital signal conditioner, a DSP for advanced signal processing and a programmable output stage driver.

The MLX90421 is sensitive to the three components of the magnetic flux density applied to the ICs (i.e. Bx, By and Bz). Programming the sensor determines which axes are used to calculate a rotation or linear position. This allows the MLX90421, with the correct magnetic design, to calculate the absolute position of any moving magnet (e.g. rotary position from 0 to 360 Degrees, see Figure 2). It enables the design of non-contacting position sensors that are frequently required for both automotive and industrial applications.

The MLX90421 provides either a ratiometric analog or a pulse width modulated (PWM) output. Programming the sensor, after assembly into the application, increases the accuracy of the system thanks to the multi-point programmable linearization function.

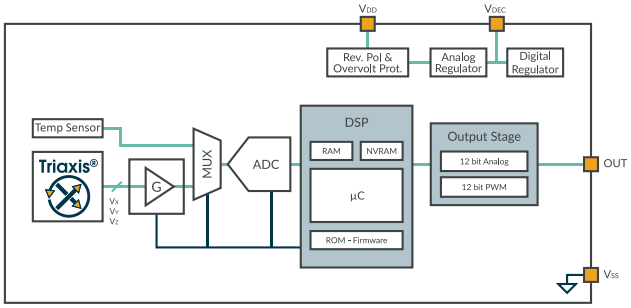

MLX90421 functional diagram

REVISION 004 - 31 March 2026

3901090421

Downloaded from Arrow.com.

Ordering Information

Product	Temp.	Package	Option Code	Packing Form	Definition
MLX90421	G	DC	ADC-000	RE	Angular Rotary Analog/PWM version
MLX90421	G	GO	ADC-000	RE	Angular Rotary Analog/PWM version
MLX90421	G	VS	ADC-000	RE/RX	Angular Rotary Analog/PWM version
MLX90421	G	VS	ADC-003	RE/RX	Angular Rotary Analog/PWM version
MLX90421	G	VS	ADC-008	RE/RX	Angular Rotary Analog/PWM version
MLX90421	G	VE	ADC-000	RE/RX	Angular Rotary Analog/PWM version
MLX90421	G	VD	ADC-000	RE/RX	Angular Rotary Analog/PWM version

Table 1 – Ordering codes

Temperature Code:	G : from -40°C to 160°C Some parts can be exposed to higher temperatures for a limited time [1]
Package Code:	DC : SOIC-8 package (see 18.1) GO : TSSOP-16 package (full redundancy dual die, see 18.2) VS : DMP-4 package (PCB-less dual mold, see 18.3) VE : SMP-3 package (PCB-less single mold, see 18.4) VD : SMP-4 package (PCB-less single mold dual die, see 18.5)
Option Code - Chip revision	**ADC-123 : Chip Revision** ▪ ADC: MLX90421 production version
Option Code - Application	**ADC-123 : 1-Application - Magnetic configuration** ▪ 0: Angular Rotary / Linear Position
Option Code	**ADC-123 : 2-Option** ▪ 0: Standard
Option Code - Trim & Form	**ADC-123 : 3-DMP-4 Trim & Form configuration** ▪ 0: Standard straight leads. See section 18.3.1 ▪ 3: Trim and Form STD2 2.54. See section 18.3.2 ▪ 8: Trim and Form STD4 2.54. See section 18.3.3
Packing Form:	-RE : Tape & Reel ▪ VS/VE/VD: 2500 pcs/reel ▪ DC: 3000 pcs/reel ▪ GO: 4500 pcs/reel -RX : Tape & Reel, similar to RE with parts face-down
Ordering Example:	MLX90421GDC-ADC-000-RE For an analog version in SOIC-8 package, delivered in Reel of 3000pcs.

Table 2 - Ordering codes information

[1] *The devices can be used up-to an ambient temperature of +180°C. For a description of the conditions, refer to the sub-sections labelled "High-temperature Extension"(4.1, 6.1, 9.2.3, 11.1.1, 11.2.3, 13.5.4).*

Downloaded from Arrow.com.

Contents

Features and Benefits 1
Application Examples 1
Description 1
Ordering Information 2
1. Functional Diagram and Application Modes 5
2. Glossary of Terms 6
3. Pin Definitions and Descriptions 7
3.1. Pin Definition for SOIC-8 7
3.2. Pin Definition for TSSOP-16 7
3.3. Pin Definition for DMP-4 8
3.4. Pin Definition for SMP-3 8
3.5. Pin Definition for SMP-4 8
4. Absolute Maximum Ratings 9
4.1. High-Temperature Extension Absolute Maximum Ratings 10
5. Isolation Specification 10
6. General Electrical Specifications 11
6.1. High-Temperature Extension Electrical Specifications 13
7. Timing Specification 13
7.1. General Timing Specifications 13
7.2. Continuous Acquisition Mode 14
7.3. Timing Definitions 14
7.4. Analog Output Timing Specifications 17
7.5. PWM Output Timing Specifications 17
8. Magnetic Field Specifications 18
9. Accuracy Specifications 19
9.1. Definitions 19
9.2. Performances 20
10. Memory Specifications 21
11. Output Protocol Description 22
11.1. Analog Output Description 22
11.2. PWM Output Description 22
12. End-User Programmable Items 24
13. Description of End-User Programmable Items 27

Downloaded from Arrow.com.

13.1. Output modes and protocols 27
13.2. Output Transfer Characteristic 28
13.3. Sensor Front-End 33
13.4. Filtering 33
13.5. Programmable Diagnostics Settings 34
14. Functional Safety 37
14.1. Safety Manual 37
14.2. Safety Mechanisms 37
14.3. Fault Handling Time Interval 41
15. Recommended Application Diagrams 42
15.1. Wiring with the MLX90421 in SOIC-8 Package 42
15.2. Wiring with the MLX90421 in TSSOP-16 Package 43
15.3. Wiring with the MLX90421 in DMP-4 Package (built-in capacitors) 44
15.4. Wiring with the MLX90421 in SMP-3 Package (built-in capacitors) 45
15.5. Wiring with the MLX90421 in SMP-4 Package (built-in capacitors) 46
16. Standard information regarding manufacturability of Melexis products with different soldering processes 47
17. ESD Precautions 47
18. Package Information 48
18.1. SOIC-8 - Package Information 48
18.2. TSSOP-16 - Package Information 50
18.3. DMP-4 - Package Information 52
18.4. SMP-3 - Package Information 55
18.5. SMP-4 - Package Information 58
18.6. Packages Thermal Performances 60
19. Contact 61
20. Disclaimer 61

Downloaded from Arrow.com.

1. Functional Diagram and Application Modes

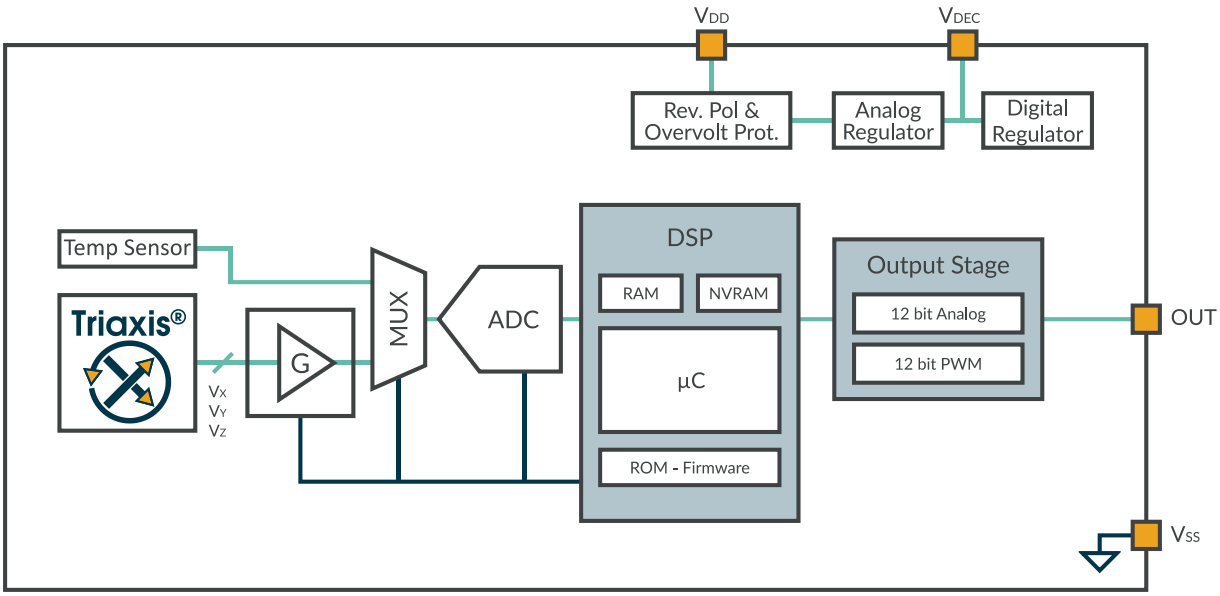

Figure 1 - MLX90421 Block diagram

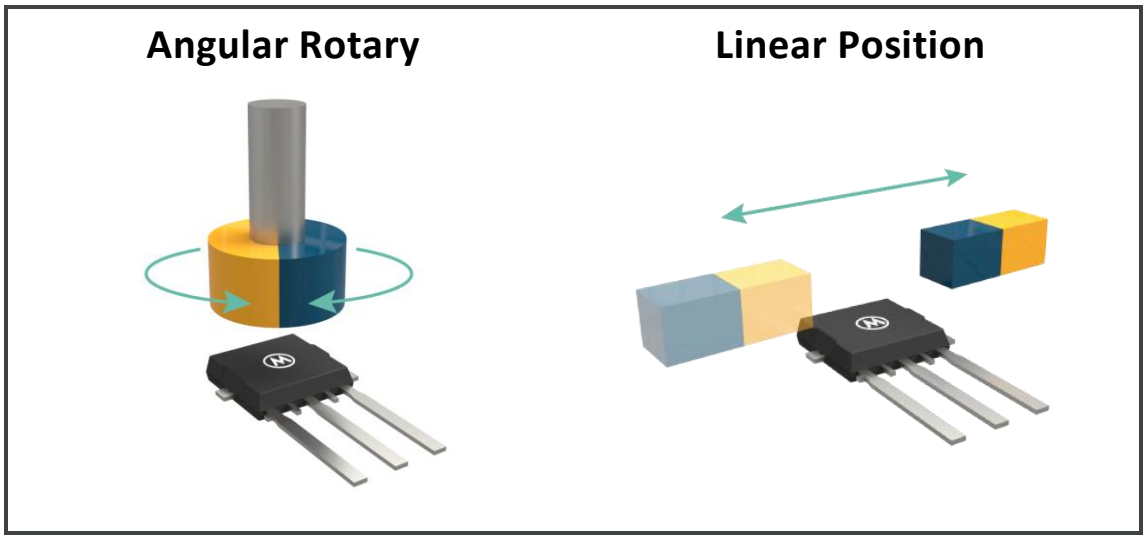

Figure 2 - Application modes

Downloaded from Arrow.com.

2. Glossary of Terms

Name	Description
ADC	Analog-to-Digital Converter
AoU	Assumption of Use
AWD	Absolute Watchdog
CPU	Central Processing Unit
CRC	Cyclic Redundancy Check
%DC	Duty Cycle of the output signal i.e. T_{ON} /(T_{ON} + T_{OFF})
DCT	Diagnostic Cycle Time
DMP	Dual Mold Package
DP	Discontinuity Point
DSP	Digital Signal Processor
ECC	Error Correcting Code
EMC	Electro-Magnetic Compatibility
EoL	End of Line
ESD	Electro-Static Discharge
FIR	Finite Impulse Response
Gauss (G)	Alternative unit for the magnetic flux density (10G = 1mT)
HW	Hardware
IMC	Integrated Magnetic Concentrator
INL / DNL	Integral Non-Linearity / Differential Non-Linearity
IWD	Intelligent Watchdog
LNR	LiNeaRization
LSB/MSB	Least Significant Bit / Most Significant Bit
N.C.	Not Connected
NVRAM	Non Volatile RAM
PCB	Printed Circuit Board
POR	Power On Reset
PSF	Product Specific Functions
PWM	Pulse Width Modulation
RAM	Random Access Memory
ROM	Read-Only Memory
SEooC	Safety Element out of Context
SMP	Single-Mold Package
SOIC	Small Outline Integrated Circuit
TC	Temperature Coefficient (in ppm/°C)
TSSOP	Thin Shrink Small Outline Package
Tesla (T)	SI derived unit for the magnetic flux density (Vs/m^2)

Table 3 - Glossary of terms

Downloaded from Arrow.com.

3. Pin Definitions and Descriptions

3.1. Pin Definition for SOIC-8

Pin #	Name	Description
1	V_{DD}	Supply
2	$Test_1$	For Melexis factory test
3	$Test_2$	For Melexis factory test
4	N.C.	Not connected
5	OUT	Output
6	N.C.	Not connected
7	V_{DEC}	Decoupling pin
8	V_{SS}	Ground

Table 4 - SOIC-8 pins definition and description

Test pins are internally grounded when in application mode. For improved EMC behavior, connect the Test and N.C. pins to the ground of the PCB.

3.2. Pin Definition for TSSOP-16

Pin #	Name	Description
1	V_{DEC1}	Decoupling pin die1
2	V_{SS1}	Ground die1
3	V_{DD1}	Supply die1
4	$Test_{11}$	For Melexis factory test, die1
5	$Test_{22}$	For Melexis factory test, die2
6	OUT_2	Output die2
7	N.C.	Not connected
8	N.C.	Not connected
9	V_{DEC2}	Decoupling pin die2
10	V_{SS2}	Ground die2
11	V_{DD2}	Supply die2
12	$Test_{12}$	For Melexis factory test, die2
13	$Test_{21}$	For Melexis factory test, die1
14	N.C.	Not connected
15	OUT_1	Output die1
16	N.C.	Not connected

Table 5 - TSSOP-16 pins definition and description

Test pins are internally grounded when in application mode. For improved EMC behavior, connect the Test and N.C. pins to the ground of the PCB.

Downloaded from Arrow.com.

3.3. Pin Definition for DMP-4

DMP-4 package offers a pin-to-pin compatibility with the previous generation of Triaxis® products.

Pin #	Name	Description
1	V_{SS}	Ground
2	V_{DD}	Supply
3	OUT	Output
4	V_{SS}	Ground

Table 6 - DMP-4 pins definition and description

3.4. Pin Definition for SMP-3

SMP-3 package offers advanced components integration in a single mold compact form.

Pin #	Name	Description
1	V_{DD}	Supply
2	OUT	Output
3	V_{SS}	Ground

Table 7 - SMP-3 pins definition and description

3.5. Pin Definition for SMP-4

SMP-4 package offers a redundant dual-die package with advanced components integration in a single mold compact form.

Pin #	Name	Description
1	OUT_1	Output 1
2	V_{SS}	Ground
3	V_{DD}	Supply
4	OUT_2	Output 2

Table 8 - SMP-4 pins definition and description

Downloaded from Arrow.com.

4. Absolute Maximum Ratings

Parameter		Symbol	Min	Max	Unit	Condition
Supply Voltage	Positive	V_{DD}		28 37	V	< 48h < 60s; $T_{AMB} \leq 35°C$
	Reverse	$V_{DD\text{-}rev}$	-14 -18		V	< 48h < 1h
Output Voltage	Positive	V_{OUT}		28 34	V	< 48h < 1h
	Reverse	$V_{OUT\text{-}rev}$	-14 -18		V	< 48h < 1h
Internal Voltage	Positive	V_{DEC}		3.6	V	< 1h
	Reverse	$V_{DEC\text{-}rev}$	-0.3		V	< 1h
$Test_1$ pin Voltage	Positive	V_{Test1}		6	V	< 1h
	Reverse	$V_{Test1\text{-}rev}$	-3		V	< 1h
$Test_2$ pin Voltage	Positive	V_{test2}		3.6	V	< 1h
	Reverse	$V_{test2\text{-}rev}$	-0.3		V	< 1h
Operating Temperature		T_{AMB}	-40	+160	°C	
Junction Temperature [(2)]		T_J		+175	°C	
Storage Temperature		T_{ST}	-55	+170	°C	
Magnetic Flux Density		B_{max}	-1	1	T	

Table 9 - Absolute maximum ratings

Exceeding any of the absolute maximum ratings may cause permanent damage.

Exposure to absolute maximum ratings conditions for extended periods may affect device reliability.

The voltages given in Table 9 are valid for a single die and will degrade when simultaneously applied to multiple dice in the same package.

[2] *Find package thermal dissipation values in section 18.4*

Downloaded from Arrow.com.

4.1. High-Temperature Extension Absolute Maximum Ratings

The MLX90421 can be exposed to high-temperature within the range [160, 180] °C for a limited duration. The device continues to operate with degraded performances according to the values listed in the following table. This extension is only valid for the SMP-3, SMP-4 and DMP-4 packages.

Parameter		Symbol	Min	Max	Unit	Condition
Supply Voltage	Positive	V_{DD}		5.5	V	T_{AMB} = 180°C, see [3]
	Reverse	$V_{DD\text{-}rev}$	-14		V	T_{AMB} = 180°C, < 1h
Output Voltage	Positive	V_{OUT}		26	V	T_{AMB} = 180°C, < 1h
	Reverse	$V_{OUT\text{-}rev}$	-14		V	T_{AMB} = 180°C, < 1h
Operating Temperature		T_{AMB}	-40	+180	°C	< 250h
Junction Temperature		T_J		+190	°C	< 250h
Storage Temperature		T_{ST}	-55	+190	°C	< 250h

Table 10 - High-temperature extension absolute maximum ratings

Exceeding any of the absolute maximum ratings may cause permanent damage.

Exposure to absolute maximum ratings conditions for extended periods may affect device reliability.

The voltages given in Table 10 are valid for a single die and will degrade when simultaneously applied to multiple dice in the same package.

5. Isolation Specification

The specified isolation resistance is only valid for the TSSOP-16 package (code GO).

Parameter	Symbol	Min	Typ.	Max	Unit	Condition
Isolation Resistance	R_{isol}	4	-	-	MΩ	Between dies, measured between V_{SS1} and V_{SS2} with +/-20V bias

Table 11 - Isolation specification

[3] *Higher supply voltages will increase the die temperature above the max junction temperature T_J*

Downloaded from Arrow.com.

6. General Electrical Specifications

General electrical specifications are valid for temperature range [-40, 160] °C and supply voltage range [4.5, 5.5] V unless otherwise noted.

Electrical Parameter	Symbol	Min	Typ.	Max	Unit	Condition
Supply Voltage	V_{DD}	4.5	5	5.5	V	
Supply Current [4]	I_{DD}	7.5	8.5	10.0	mA	Single
Start-up Level (rising)	$V_{DDstartH}$	3.85	4.00	4.15	V	
Start-up Hysteresis	$V_{DDstartHyst}$		100		mV	
PTC Entry Level (rising)	V_{PROV0}	5.85	6.05	6.25	V	Supply overvoltage detection
PTC Entry Level Hysteresis	$V_{PROV0Hyst}$	100	175	250	mV	
Under voltage detection	V_{DDUVL}	3.75	3.90	4.05	V	Supply voltage low threshold
Under voltage detection hysteresis	$V_{DDUVHyst}$		100		mV	
Regulated Voltage	V_{DEC}	3.2	3.3	3.4	V	Internal analog voltage

Table 12 - Supply system electrical specifications

Electrical Parameter	Symbol	Min	Typ.	Max	Unit	Condition
External Pull-up Voltage	V_{ext}			18 V_{DD}	V	Output Pull-up voltage in open-drain NMOS mode or analog mode Output Pull-up voltage in Push-Pull mode
Output Short Circuit Current Limit	$I_{OUTshort}$	10		35	mA	
Output Load	R_L	5	10		kΩ	Analog output
		5		100	kΩ	Digital output with Push-Pull PWM pull-up to $V_{ext} = V_{DD}$, PWM pull-down to 0V
		1.5 5 1.5		25 18 25	kΩ	Digital output with open-drain PMOS, pull-down to 0V NMOS, pull-up to $V_{ext} \leq 18V$ NMOS, pull-up to $V_{ext} = V_{DD}$

[4] *For the dual die version, the supply current is multiplied by 2.*

Downloaded from Arrow.com.

Electrical Parameter	Symbol	Min	Typ.	Max	Unit	Condition
Analog output Saturation Level	V_{satA_lo}		0.5[5] 3.3[5]	1.2[6] 7.4[6]	$\%V_{DD}$	Pull-up $R_L \geq 10$ kΩ to $V_{ext} = V_{DD}$ Pull-up $R_L \geq 5$ kΩ to $V_{ext} \leq 18V$
	V_{satA_hi}	97.0[6] 95.0[6]	99.0[5] 98.0[5]		$\%V_{DD}$	Pull-down $R_L \geq 10$ kΩ to 0V Pull-down $R_L \geq 5$ kΩ to 0V
Digital output with push-pull level	V_{satD_lopp}			1.2[6]	$\%V_{DD}$	Pull-up $R_L \geq 10$ kΩ to $V_{ext} = V_{DD}$
	V_{satD_hipp}	97.0[6] 95.0[6]			$\%V_{DD}$	Pull-down $R_L \geq 10$ kΩ to 0V Pull-down $R_L \geq 5$ kΩ to 0V
Digital output with open-drain level	$V_{satLoOd}$	0		10	$\%V_{ext}$	Pull-up to $V_{ext} \leq 18V$, $I_L \leq 3.4$mA
	$V_{satHiOd}$	90		100	$\%V_{DD}$	Pull-down to 0V, $I_L \leq 3.4$mA
Digital open-drain output leakage & Hi-Z modes [7]	$I_{leakpuOd}$ I_{leakpu} I_{leakpd}			100 20 20	µA	Pull-up to $V_{ext} > V_{DD}$ Pull-up to $V_{ext} = V_{DD}$ Pull-down to 0V
Digital output Resistance	R_{on}	27	50	130	Ω	Push-pull mode (out of clamping band)
Passive Diagnostic Output Level (Broken-Wire Detection) [8]	$BV_{SS}PD$		1.2 0.5	4.0 1.6	$\%V_{DD}$	Broken V_{SS} & Pull-down $R_L \leq 25$ kΩ to 0V Pull-down $R_L \leq 10$ kΩ to 0V
	$BV_{SS}PU$	99.5	100		$\%V_{DD}$	Broken V_{SS} & Pull-up $R_L \geq 1$ kΩ to V_{ext}
	$BV_{DD}PD$		0	0.5	$\%V_{DD}$	Broken V_{DD} & Pull-down $R_L \geq 1$ kΩ to 0V
	$BV_{DD}PU$	92.5 97.0	98.7 99.5		$\%V_{DD}$	Broken V_{DD} & Pull-up $R_L \leq 25$ kΩ to V_{ext} Pull-up $R_L \leq 10$ kΩ to V_{ext}

Table 13 - Output electrical specifications

[5] *at 35 °C and 5V supply voltage*

[6] *at 160 °C and ≥4.5V supply voltage*

[7] *The digital output level is thereby determined by the external voltage and pull-up or pull-down resistor.*

[8] *Valid for dual-die configurations as well where the two dies have the same supply and ground level, while the output of one die is connected with PU and the output of the other one is connected with PD.*

Downloaded from Arrow.com.

6.1. High-Temperature Extension Electrical Specifications

When the MLX90421 is exposed to high-temperatures within the range [160, 180] °C and the supply voltage remains in the range [4.5, 5.5] V, the output pull-up voltage range shall remain within the limits of the supply voltage.

Electrical Parameter	Symbol	Min	Typ	Max	Unit	Condition
External Pull-up Voltage	V_{ext}			V_{DD}	V	Output Pull-up voltage in open-drain NMOS mode or analog mode

Table 14 - High-temperature electrical specifications

7. Timing Specification

Timing specifications are valid for temperature range [-40, 160] °C and supply voltage range [4.5, 5.5] V unless otherwise noted.

7.1. General Timing Specifications

Parameter	Symbol	Min	Typ.	Max	Unit	Condition
Main Clock Frequency	F_{CK}	22.8 -5	24	25.2 5	MHz $\%F_{ck}$	Including thermal and lifetime drift
Main Clock initial tolerances	$\Delta F_{CK,0}$	-1		1	$\%F_{ck}$	T=35°C, trimmed
Main Clock Frequency Thermal Drift	$\Delta F_{CK,T}$	-3.5		3.5	$\%F_{ck}$	Relative to clock frequency at 35°C. Ageing effect not included
1MHz Clock Frequency	F_{1M}	0.95 -5	1	1.05 5	MHz $\%F_{1M}$	Including thermal and lifetime drift
Analog Diagnostics DCT	DCT_{ANA}			10.9	ms	Continuous Acquisition mode (7.2), applicable to analog and PWM.
Digital Diagnostics DCT	DCT_{DIG}			19.7	ms	
Fail Safe state duration [9]	T_{FSS}	5		33	ms	For digital single-event faults

Table 15 - General timing specifications

[9] *Fully programmable. Time between reset due to digital fault to first valid data transmission. Min. value defined by OUT_DIAG_HIZ_TIME (see Table 29 in chapter 12 for details).*

Downloaded from Arrow.com.

7.2. Continuous Acquisition Mode

In this mode, the sensor continuously acquires an angle at a fixed rate and updates its output when the information is ready. The acquisition rate is defined by the angle measurement period $T_{angleMeas}$. The PWM output frequency is asynchronous with regards to the angle measurement sequence and controlled by the T_FRAME parameter.

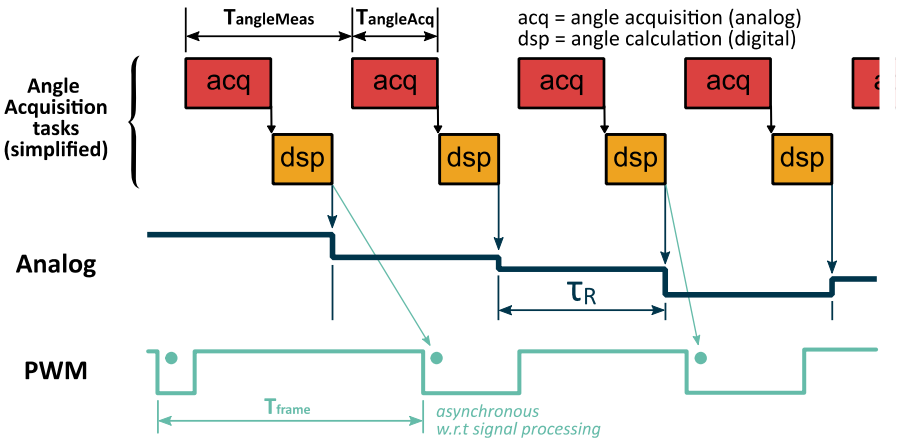

Figure 3 - Continuous Acquisition Timing Mode [10]

Parameter	Symbol	Min	Typ.	Max	Unit	Condition
Angle acquisition time	$T_{angleAcq}$		192		µs	Default factory settings
Internal Angle Measurement Period	$T_{angleMeas}$		448		µs	Default factory settings

Table 16 - Continuous acquisition timing mode

7.3. Timing Definitions

7.3.1. Startup Time

In analog mode, the start-up time τ_{SU} is defined by the duration between rising of the supply voltage and the output being set to the voltage level of the measured angle. During the start-up phase, the sensor output remains in a high impedance state. The output driver is enabled only when the sensor is able to transmit a valid angle.

In PWM mode, the start-up phase consists of three phases of durations $T_{stup[1:3]}$. The first phase ends when the sensor output leaves high impedance state and starts to drive a voltage. The end of the second phase T_{stup2} is reached when an angle is ready to be transmitted and indicated by the first synchronization edge of the PWM signal. The start-up phase is considered complete after T_{stup3} when the first angle has been transmitted, which happens one PWM period after T_{stup2}.

[10] *τ_R is defined in Table 17.*

Downloaded from Arrow.com.

These definitions are illustrated in the following figure (Figure 4) where τ_{init} represents the sensor internal initialization sequence.

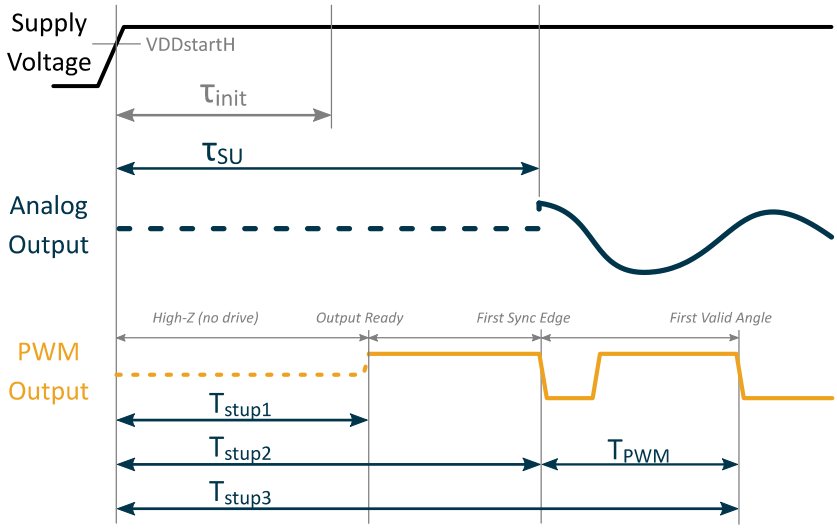

Figure 4 - Startup time definition

7.3.2. Latency (average)

Latency is the average lag between the movement of the detected object (magnet) and the response of the sensor output. This value is representative of the time constant of the MLX90421 for regulation calculations.

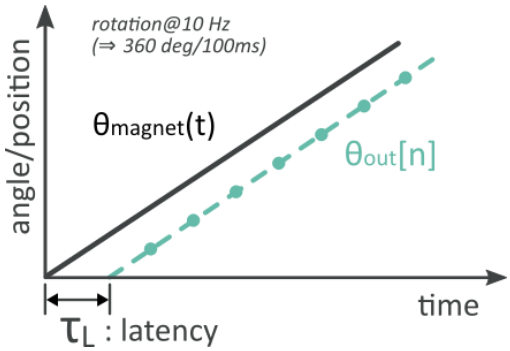

Figure 5 - Definition of latency

7.3.3. Step Response (worst-case)

The Step Response T_{wcStep} is defined as the maximal delay between a change of position of the magnet and the 100% settling time of the sensor output, with full angle accuracy with regards to filtering. This worst-case is happening when the movement of the magnet occurs just after a measurement sequence has begun. The Step Response therefore consists of the sum of:

- $\delta_{mag,measSeq}$, the delay between the magnetic step and the end of the measurement sequence
- $T_{angleMeas}$, the internal angle measurement period
- $\delta_{measSeq,trans}$, the delay between the end of the measurement sequence and the beginning of the transmission of the angle information
- T_{trans}, the duration of the transmission of the angle information, which depends on the protocol

Downloaded from Arrow.com.

The worst-case occurs when the magnetic step is just after the beginning of a measurement sequence. In other words, when $\delta_{mag,measSeq}$ equals the length of the measurement sequence $\tau_{measSeq}$. This gives:

$$T_{wcStep} = \tau_{measSeq} + T_{angleMeas} + \delta_{measSeq,trans} + T_{trans}$$

In analog output mode, the angle information is immediately available after the end of the internal measurement period and the transmission delay is negligible. The last two terms of the above equation can be nulled. When using a PWM output protocol, the last two terms of the equation are, in the worst-case condition, both equal to a PWM frame duration T_{PWM}. The Figure 6 shows a practical case of a step response for both an analog and PWM output.

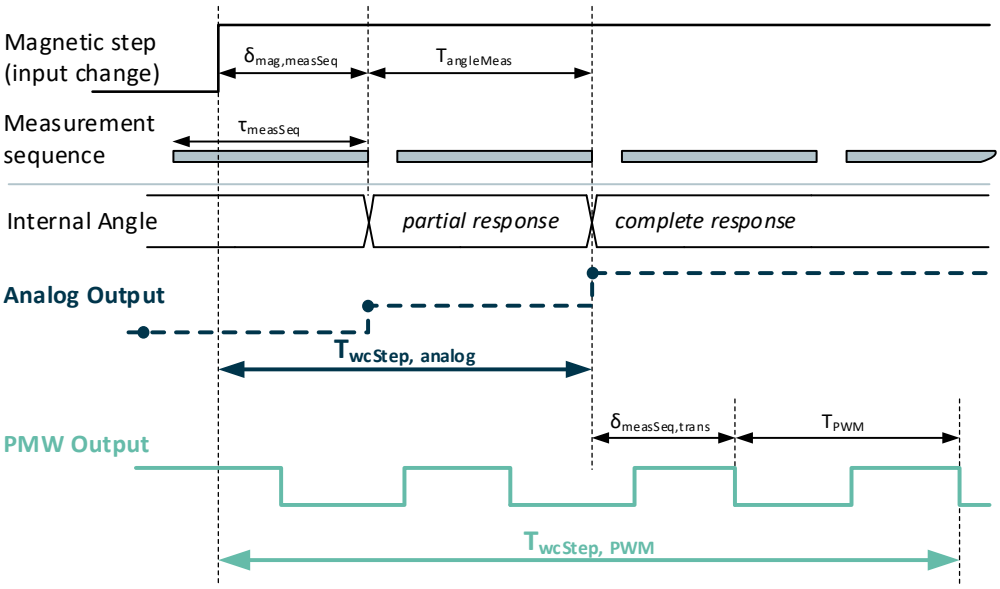

Figure 6 - Step response definition

Downloaded from Arrow.com.

7.4. Analog Output Timing Specifications

Parameter	Symbol	Min	Typ.	Max	Unit	Condition
Output refresh period [11]	$T_{angleMeas}$		448	470	µs	Default factory setting
Latency	τ_L		228	240	µs	Filter 0
Step response	T_{wcStep}		763 1211 2107	811 1282 2223	µs	Filter 0, Filter 1, Filter 2 (see 13.4 Filtering)
Start-up time	τ_{SU}		4.1	5.0	ms	
Safe startup time	$T_{SafeStup}$			31	ms	Default factory setting OUT_DIAG_HIZ_TIME set to 15
Slew-rate	S_R	90			V/ms	C_{OUT} = 100nF

Table 17 - Analog output timing specifications

7.5. PWM Output Timing Specifications

For the parameters in below table, maximum timings correspond to minimal frequencies and vice versa.

Parameter	Symbol	Min	Typ.	Max	Unit	Condition
PWM Frequency	F_{PWM}	100		2000	Hz	
PWM Frequency Initial Tolerances	$\Delta F_{PWM,0}$	-1		1	$\%F_{PWM}$	T=35°C, can be trimmed at EOL
PWM Frequency Thermal Drift	$\Delta F_{PWM,T}$	-3.5		3.5	$\%F_{PWM}$	
PWM Frequency Drift	ΔF_{PWM}	-5		5	$\%F_{PWM}$	Over temperature and lifetime
PWM startup time [12]	T_{stup1}		4.1		ms	Default factory setting Up to output ready
	T_{stup2}		5.2		ms	Default factory setting Up to first sync. Edge $T_{stup1} + T_{PWM}$
	T_{stup3}		6.3		ms	Default factory setting Up to first data received $T_{stup2} + T_{PWM}$
PWM Safe startup time				31	ms	Default factory setting up to first sync. edge

Table 18 - PWM timing specifications

[11] *In analog mode, the output refresh period matches the internal angle measurement period.*

[12] *Typ. value specified according to the typical PWM frequency. Max. value can be obtained by scaling with the PWM frequency drift accordingly.*

Downloaded from Arrow.com.

8. Magnetic Field Specifications

Magnetic field specifications are valid for temperature range [-40, 160] °C unless otherwise noted.

Parameter	Symbol	Min	Typ.	Max	Unit	Condition
Number of magnetic poles	N_P		2			
Magnetic Flux Density in X-Y plane	B_x, B_y [13]			70	mT	$\sqrt{B_X^2 + B_Y^2}$
Magnetic Flux Density in Z	B_z			126	mT	in absolute value
Useful Magnetic Flux Density Norm	B_{Norm}	10[14]	20		mT	$\sqrt{B_X^2 + B_Y^2}$ (X-Y mode) $\sqrt{B_X^2 + \left(\frac{1}{G_{IMC}} B_Z\right)^2}$ (X-Z mode) $\sqrt{B_Y^2 + \left(\frac{1}{G_{IMC}} B_Z\right)^2}$ (Y-Z mode) see 13.3 for sensing mode description.
IMC gain [15]	G_{IMC}		1.19			
Magnet Temperature Coefficient	TC_m	-2400		0	$\frac{ppm}{°C}$	
Field Too Low Threshold	B_{TH_LOW}	2	4	30	mT	Typ. is recommended value to be set by user (see 13.5.5)
Field Too High Threshold [16]	B_{TH_HIGH}	70	126	126	mT	Typ. is recommended value to be set by user (see 13.5.5)

Table 19 - Magnetic specifications for standard application

The magnetic performances are listed in chapter 9.2. The Figure 7 defined under which conditions nominal, limited or high-temperature performances apply.

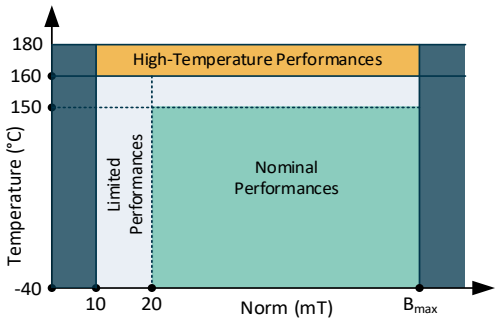

Figure 7 - Useful magnetic signal definition

[13] *The condition must be fulfilled for all combinations of B_x and B_y.*

[14] *Only valid under the conditions of Figure 7. Outside of the "Limited Performances" zone, the performances are further degraded due to a reduction of the signal-to-noise ratio and signal-to-offset ratio.*

[15] *The IMC has a better performance for concentrating in-plane (X-Y) field components, resulting in a better overall magnetic sensitivity. A correction factor, called IMC gain has to be applied to the z field component to account for this difference.*

[16] *Due to the saturation effect of the IMC, the FieldTooHigh monitor detects only defects in the sensor*

Downloaded from Arrow.com.

9. Accuracy Specifications

Accuracy specifications are valid for temperature range [-40, 160] °C and supply voltage range [4.5, 5.5] V unless otherwise noted.

9.1. Definitions

9.1.1. Intrinsic Linearity Error

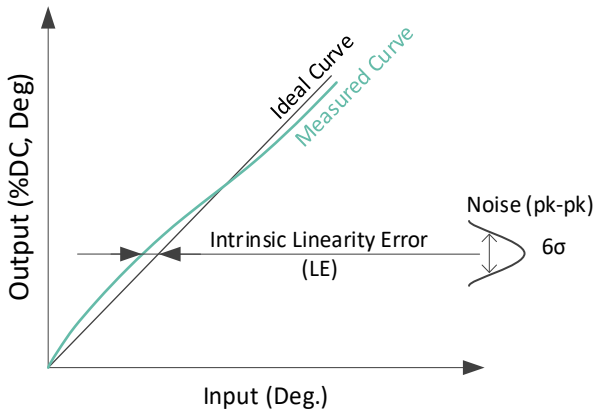

Figure 8 - Sensor accuracy definition

The illustration of Figure 8 depicts the intrinsic linearity error in new parts. The Intrinsic Linearity Error refers to the error sources of the IC (offset, sensitivity mismatch, orthogonality error) considering an ideal magnetic field. Once associated to a practical magnetic construction and its respective mechanical and magnetic tolerances, the output linearity error increases. The linearity error can be improved with the multi-point end-user calibration (see 13.2). As a consequence, this error is not the critical factor in application when it is calibrated away.

9.1.2. Total Angle Drift

After calibration, the output angle of the sensor might still change due to temperature change and aging. This error is defined as the total drift $\partial\theta_{TT}$:

$$\partial\theta_{TT} = \max\{\theta(\theta_{IN}, T, t) - \theta(\theta_{IN}, T_{RT}, t_0)\}$$

where θ_{IN} is the input angle, T is the temperature, T_{RT} is the room temperature, and t is the elapsed lifetime after calibration. t_0 represents the start of the sensor operating life. Note that the total drift $\partial\theta_{TT}$ is always defined with respect to the angle at room temperature. In this datasheet, T_{RT} is typically defined at 35°C unless stated otherwise. The total drift is valid for all angles along the full mechanical stroke.

Downloaded from Arrow.com.

9.2. Performances

9.2.1. Nominal Performances

Valid before EoL calibration and for all applications under nominal performances conditions described in chapter 6 and chapter 8.

Parameter	Symbol	Min	Typ.	Max	Unit	Condition
XY - Intrinsic Linearity Error	L_{E_XY}	-1		1	Deg.	
XZ - Intrinsic Linearity Error	L_{E_XZ}	-2.5		2.5	Deg.	
YZ - Intrinsic Linearity Error	L_{E_YZ}	-2.5		2.5	Deg.	
Noise [17]			0.1 0.15 0.1	0.2 0.35 0.2	Deg.	Filter = 0, B_{Norm} ≥ 40mT Filter = 0, B_{Norm} ≥ 20mT Filter = 2, B_{Norm} ≥ 20mT
XY - Total Drift [18]	$\partial\theta_{TT_XY}$	-0.6		0.6	Deg.	Relative to 35°C
XZ - Total Drift [18]	$\partial\theta_{TT_XZ}$	-0.8		0.8	Deg.	
YZ - Total Drift [18]	$\partial\theta_{TT_YZ}$	-0.8		0.8	Deg.	
Hysteresis				0.1	Deg.	B_{Norm} ≥ 20mT

Table 20 - Nominal magnetic performances

9.2.2. Limited Performances

Valid before EoL calibration and for all applications under limited performances conditions described in chapter 6 and chapter 8.

Parameter	Symbol	Min	Typ.	Max	Unit	Condition
XY - Intrinsic Linearity Error	L_{E_XY}	-1		1	Deg.	
XZ - Intrinsic Linearity Error	L_{E_XZ}	-2.5		2.5	Deg.	
YZ - Intrinsic Linearity Error	L_{E_YZ}	-2.5		2.5	Deg.	
Noise [17]			0.15 0.3 0.55 0.15	0.25 0.45 0.8 0.25	Deg.	Filter = 0, B_{Norm} ≥ 40mT Filter = 0, B_{Norm} ≥ 20mT Filter = 0, B_{Norm} ≥ 10mT Filter = 2, B_{Norm} ≥ 20mT
XY - Total Drift [18]	$\partial\theta_{TT_XY}$	-0.8		0.8	Deg.	Relative to 35°C
XZ - Total Drift [18]	$\partial\theta_{TT_XZ}$	-1.0		1.0	Deg.	
YZ - Total Drift [18]	$\partial\theta_{TT_YZ}$	-1.0		1.0	Deg.	
Hysteresis				0.2	Deg.	B_{Norm} ≥ 10mT

Table 21 - Limited magnetic performances

17 ±3σ

18 Verification done on new and aged devices in an ideal magnetic field. An additional application-specific error arises from the non-ideal magnet and mechanical tolerance drift.

Downloaded from Arrow.com.

9.2.3. High-Temperature Extension Performances

When the MLX90421 is exposed to high-temperatures within the range [160, 180] °C and the supply voltage remains in the range [4.5, 5.5] V, the following magnetic performances apply.

Parameter	Symbol	Min	Typ.	Max	Unit	Condition
XY - Intrinsic Linearity Error	L_{E_XY}	-1.2		1.2	Deg.	
XZ - Intrinsic Linearity Error	L_{E_XZ}	-2.5		2.5	Deg.	
YZ - Intrinsic Linearity Error	L_{E_YZ}	-2.5		2.5	Deg.	
Noise [17]			0.20 0.40 0.80 0.20	0.30 0.55 1.0 0.30	Deg.	Filter = 0, B_{Norm} ≥ 40mT Filter = 0, B_{Norm} ≥ 20mT Filter = 0, B_{Norm} ≥ 10mT Filter = 2, B_{Norm} ≥ 20mT
XY - Total Drift [18]	$\partial\theta_{TT_XY}$	-1.0		1.0	Deg.	Relative to 35°C, B_{Norm} ≥ 10mT
		-0.75		0.75	Deg.	Relative to 35°C, B_{Norm} ≥ 20mT
XZ - Total Drift [18]	$\partial\theta_{TT_XZ}$	-1.2		1.2	Deg.	Relative to 35°C, B_{Norm} ≥ 10mT
	$\partial\theta_{TT_XZ}$	-1.0		1.0	Deg.	Relative to 35°C, B_{Norm} ≥ 20mT
YZ - Total Drift [18]	$\partial\theta_{TT_YZ}$	-1.2		1.2	Deg.	Relative to 35°C, B_{Norm} ≥ 10mT
	$\partial\theta_{TT_YZ}$	-1.0		1.0	Deg.	Relative to 35°C, B_{Norm} ≥ 20mT
Hysteresis				0.2	Deg.	B_{Norm} ≥ 10mT

Table 22 - High-Temperature Magnetic Performances

10. Memory Specifications

Parameter	Symbol	Value	Unit	Note
ROM	ROM_{size}	16	kB	1-bit parity check per 32-bit word (single error detection)
RAM	RAM_{size}	512	B	1-bit parity check per 16-bit word (single error detection)
NVRAM	$NVRAM_{size}$	128	B	6-bit ECC per 16-bit word (single error correction, double error detection)

Table 23 - Memory specifications

Downloaded from Arrow.com.

11. Output Protocol Description

11.1. Analog Output Description

Parameter	Symbol	Min	Typ.	Max	Unit	Condition
Thermal analog output Drift				0.2	$\%V_{DD}$	
Analog Output Resolution	R_{DAC}		12		bit	12-bit DAC (theoretical)
		-4		4	LSB12	INL (before EoL calibration), output between 3-97$\%V_{DD}$
		-1.0		1.5	LSB12	DNL
Ratiometric Error		-0.05 -0.1		0.05 0.1	$\%V_{DD}$	$4.5V \le V_{DD} \le 5.5V$ $V_{DDUVL} \le V_{DD} \le V_{PROV0}$

Table 24 - Analog output accuracy

11.1.1. High-Temperature Extension Analog Output Description

When the MLX90421 is exposed to high-temperatures within the range [160, 180] °C and the supply voltage remains in the range [4.5, 5.5] V, the following analog output accuracy performances apply.

Parameter	Symbol	Min.	Typ.	Max.	Unit	Condition
Thermal analog output Drift				0.25	$\%V_{DD}$	
Ratiometric Error		-0.1		0.1	$\%V_{DD}$	$4.5V \le V_{DD} \le 5.5V$

Table 25 - High-temperature analog output accuracy

11.2. PWM Output Description

11.2.1. Definition

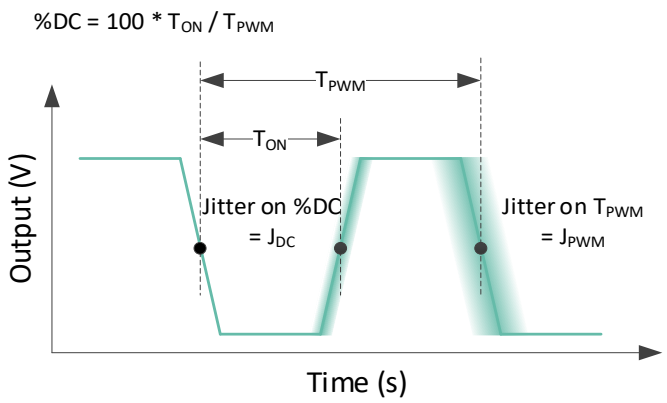

Figure 9 - PWM signal definition

Downloaded from Arrow.com.

Parameter	Symbol	Test Conditions
PWM period	T_{PWM}	Trigger level = 50% V_{DD}
Rise time, Fall time	t_{rise}, t_{fall}	Between 10% and 90% of V_{DD}
Jitter	J_{DC} J_{PWM}	±3σ for 1000 successive acquisitions with clamped output
Duty Cycle	%DC	100 * T_{ON} / T_{PWM}

Table 26 - PWM signal definition

11.2.2. PWM Performances

Parameter	Symbol	Min	Typ.	Max	Unit	Condition
PWM period	T_{PWM}	0.5		10	ms	Configurable through the T_FRAME parameter
PWM Output Resolution	R_{PWM}		0.024		%DC/LSB12	
PWM %DC Jitter	J_{DC}			0.03	%DC	C_{OUT} = 10nF, R_L = 10kΩ Push-pull, 2kHz
PWM Period Jitter	J_{PWM}			500	ns	2kHz
PWM %DC thermal drift			0.02	0.05	%DC	C_{OUT} = 10nF, R_L = 10kΩ Push-pull, 2kHz
Rise/Fall Time PWM	T_{rise_fall}	2.5	5.0	7.5	µs	C_{OUT} ≤ 15nF [19][20] Push-pull mode
Rise/Fall Active Slope PWM	S_{rise_fall}	0.5	0.8	1.6	V/µs	C_{OUT} ≤ 15nF [19][20] Push-pull or open-drain

Table 27 - PWM signal specifications

11.2.3. High-Temperature Extension PWM Performances

When the MLX90421 is exposed to high-temperatures within the range [160, 180] °C and the supply voltage remains in the range [4.5, 5.5] V, the following PWM signal specifications apply.

Parameter	Symbol	Min	Typ	Max	Unit	Condition
PWM %DC thermal drift			0.05	0.1	%DC	C_{OUT} = 10nF, R_L = 10kΩ Push-pull, 2kHz

Table 28 - High-Temperature PWM Signal Specifications

[19] *The 10nF output capacitor included in the DMP, SMP-3 and SMP-4 packages needs to be taken into account in the 15nF limit.*

[20] *If the total load current at the output is high enough to trigger the current limit protection, then the slopes will be deter mined by the maximum output current drive of around 15mA (typical value).*

Downloaded from Arrow.com.

12. End-User Programmable Items

Parameter	PSF value	Description	Default Value	# bits
		GENERAL CONFIGURATION		
USER_ID[0:5]	113 .. 118	Reserve for end-user to program information to keep traceability, unless the patch area is used	-	8
WARM_TRIGGER_LONG	106	Add delay for PTC entry level	0	1
MUPET_ADDRESS	110	PTC address for which the slave will communicate	0/1	2
		SENSOR FRONT-END		
GAINMIN	2	Virtual Gain min	0	6
GAINMAX	3	Virtual Gain max	48	7
GAINSATURATION	4	Gain saturation enable	0	1
SENSING_MODE	16	0: X-Y Angular Rotary 1: Y-Z Angular Rotary / Y Linear Position 2: X-Z Angular Rotary / X Linear Position 3: Do not use	0	2
		FILTERING		
FILTER	11	FIR filter bandwidth selection 0: no filter (default) 1: FIR11 2: FIR1111 3: Do not use	0	2
		LINEAR TRANSFER CHARACTERISTIC		
4POINTS	10	Enable 4 points linearization	0	1
CLAMPHIGH	18	High clamping value of angle output data	50%	12
CLAMPLOW	13	Low clamping value of angle output data	50%	12
CW	14	Magnet rotation direction	0	1
DP	9	DSP discontinuity point	0	13
LNRS0	21	4-pts - Slope coefficient before reference point A	-	16
LNRAX LNRBX LNRCX LNRDX	25 37 50 64	4-pts - X Coordinate for reference points A,B,C,D	-	16
LNRAY LNRBY LNRCY LNRDY	29 42 55 69	4-pts - Y Coordinate for reference points A,B,C,D	-	16

Downloaded from Arrow.com.

Parameter	PSF value	Description	Default Value	# bits
LNRAS LNRBS LNRCS LNRDS	33 46 60 71	4-pts - Slope coefficient for reference points A,B,C,D	-	16
LNRY0 LNRY1 LNRY2 LNRY3 LNRY4 LNRY5 LNRY6 LNRY7 LNRY8 LNRY9 LNRY10 LNRY11 LNRY12 LNRY13 LNRY14 LNRY15 LNRY16	24 27 32 36 40 45 49 53 59 63 67 70 74 79 84 88 92	17-pts / 16 segments - Y coordinate point [0:16]	10% 15% 20% 25% 30% 35% 40% 45% 50% 55% 60% 65% 70% 75% 80% 85% 90%	12
OUTSLOPE_COLD	94	Slope coefficient at cold of the programmable temperature-dependent offset	0	8
OUTSLOPE_HOT	95	Slope coefficient at hot of the programmable temperature-dependent offset	0	8
USEROPTION_SCALING	15	Enable output scaling 2x after linearization	0	1
WORK_RANGE	111	Working Range 17 points	0	4
WORK_RANGE_GAIN	6	Post DSP Gain Stage	16	8
		DIAGNOSTICS		
COLD_SAFE_STARTUP_EN	56	Normal (0) or safe start-up (1) after power-on reset	0	1
DIAG_EN	44	Diagnostics global enable. **Do not modify!**	1	1
DIAG_FIELDTOOHIGHTHRES	77	Field strength limit over which a fault is reported	14	4
DIAG_FIELDTOOLOWTHRES	76	Field strength limit under which a fault is reported	0	4
DIAGDEBOUNCE_STEPDOWN	30	Diagnostic debouncing step-down time used for recovery time setting	1	2
DIAGDEBOUNCE_STEPUP	31	Diagnostic debouncing step-up time used for hold time setting	1	2
DIAGDEBOUNCE_THRESH	43	Diagnostic debouncing threshold	1	3
MEMLOCK	58	Enable NVRAM write protection	0	2

Downloaded from Arrow.com.

Parameter	PSF value	Description	Default Value	# bits
OUT_DIAG_HIZ_TIME	103	Recovery time when a transient digital fault is detected Timeout = (5 + OUT_DIAG_HIZ_TIME) * 1ms	15	5
PWM_DC_FAULT_BAND	99	PWM Upper or Lower band for analog fault reporting	0	1
PWM_DC_FAULT_VAL	98	PWM Duty Cycle in case of analog fault	0	3
PWM_DC_FIELDTOOLOW_BAND	81	PWM Upper or Lower band for analog fault reporting in case of Field Strength Too Low	-	1
PWM_DC_FIELDTOOLOW_VAL	82	PWM Duty Cycle in case of Field Strength Too Low	-	3
ROUT_LOW	104	Select output impedance for PTC communication	1	1
DAC_REPORT_MODE_ANA	20	Defines the DAC state in analog-fault report mode Refer to the Safety Manual	0	2
PWM_REPORT_MODE_ANA	102	Defines the PWM state in analog-fault report mode Refer to the Safety Manual	0	1
OUTPUT CONFIGURATION				
ABE_OUT_MODE	105	HW backend output-amplifier mode selection: 0: Analog output (12-bit DAC) 1: Digital output with open-drain-NMOS 2: Digital output with open-drain-PMOS 3: Digital output with Push-Pull	0	2
PROTOCOL	107	Selection of the measurement timing mode and the corresponding output protocol: 0: continuous synchronous angle acquisition, analog output 1: continuous asynchronous angle acquisition, PWM output	0	1
T_FRAME	97	Output PWM period PWM period = 4us * T_FRAME	266	12
PWM_LOW_SR	112	Do not modify!	0	1
PWM_POL	101	Invert the PWM polarity	0	1

Table 29 - MLX90421 end-user programmable items table

Performances described in this document are only achieved by adequate programming of the device. To ensure desired functionality, Melexis recommends to follow its programming guide and to contact its technical or application service.

Downloaded from Arrow.com.

13. Description of End-User Programmable Items

13.1. Output modes and protocols

The MLX90421 offers an analog output mode and a digital output mode using the PWM protocol.

13.1.1. Output Modes

The parameter ABE_OUT_MODE defines the output stage mode (outside of fail-safe state) in application.

ABE_OUT_MODE	Description	Comments
0	Analog output (12-bit DAC)	Default
1	Digital output with open-drain NMOS	Requires a pull-up resistor on output.
2	Digital output with open-drain PMOS	Requires a pull-down resistor on output.
3	Digital output with push-pull	

Table 30 - Output mode selection

13.1.2. Protocol

The parameter PROTOCOL defined the measurement timings mode and the corresponding output protocol.

PROTOCOL	Description
0	Continuous synchronous angle acquisition, analog output (DAC)
1	Continuous asynchronous angle acquisition, PWM

Table 31 - Protocol selection

13.1.3. PWM Protocol

If a digital output mode is selected, the output signal is a Pulse Width Modulation (PWM) digital signal.

The PWM polarity is selected by the PWM_POL parameter:

- PWM_POL = 0 for a low level at 100%
- PWM_POL = 1 for a high level at 100%

The PWM frequency is selected in the range [100, 2000] Hz by the T_FRAME parameter (12-bit value), defining the period time in the range [0.5, 10] ms. Minimum allowed value for T_FRAME is therefore 125 (0x7D).

$$T_{PWM} = \frac{4}{10^6} \times T_FRAME$$

PWM timings specifications in the scope of the MLX90421 can be found in section 7.5 while PWM signal characteristics such the rise time, fall times, jitter, can be found in section 11.2.

Downloaded from Arrow.com.

13.2. Output Transfer Characteristic

There are 2 different possibilities to define the transfer function (LNR) as specified in Table 32.

- With 4 arbitrary points (defined by X and Y coordinates) and 5 slopes
- With 17 equidistant points for which only the Y coordinates are defined

Output Transfer Characteristic	4POINTS
4 Arbitrary Points	1
17 Equidistant Points	0

Table 32 - Output transfer characteristic selection table

13.2.1. Clockwise Parameter

The CW parameter defines the magnet rotation direction.

Rotation Direction	CW
Clockwise	1
Counter Clockwise	0

Table 33 - Magnet rotation selection table

Counter clockwise is the defined by

- the 1-4-5-8 pin order direction for the SOIC-8 package
- the 1-8-9-16 pin order direction for the TSSOP-16 package
- the 1-2-3-4 pin order direction for the DMP-4 package
- the 1-2-3 pin order direction for the SMP-3 package
- the 1-2-3-4 pin order direction for the SMP-4 package

Clockwise if defined by the reverse pin order. Refer to the package drawings in chapter 18.

13.2.2. Discontinuity Point (or Zero Degree Point)

The Discontinuity Point defines the 0° point on the circle. The discontinuity point places the origin at any location of the trigonometric circle. The DP is used as reference for all the angular measurements.

$$\text{New Angle} = \text{Angle} - \text{DP}$$

The DP parameter is encoded using a 13-bit two's complement signed format. The new angle and the input angle are expressed in LSB12.

Downloaded from Arrow.com.

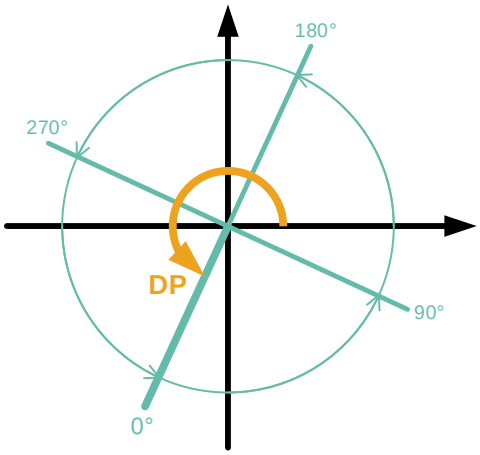

Figure 10 - Discontinuity point positioning (for CW=0)

13.2.3. 4-Pts LNR Parameters

The LNR parameters, together with the clamping values, fully define the relation (the transfer function) between the digital angle and the output signal.

The shape of the MLX90421 four points transfer function from the digital angle value to the digital output is described in the following figure (Figure 11). Seven segments can be programmed but the clamping levels are necessarily flat.

Two to six calibration points are available, reducing the overall non-linearity of the IC by almost an order of magnitude each time. Three or more calibration point will be preferred by customers looking for excellent non-linearity figures. Two-point calibrations will be preferred by customers looking for a cheaper calibration set-up and shorter calibration time.

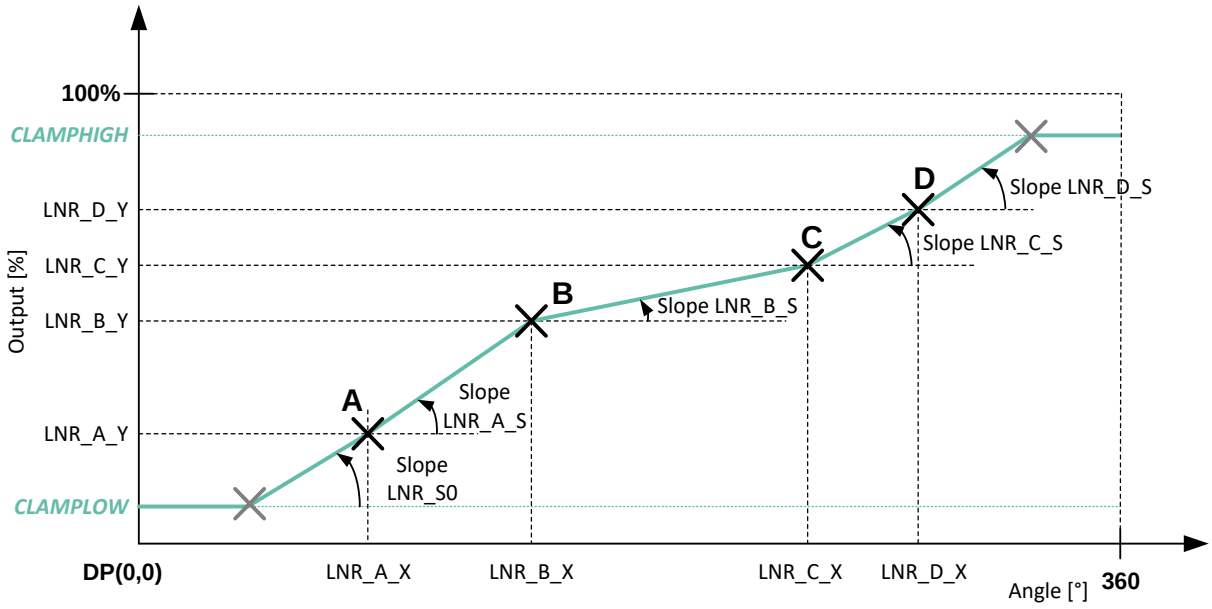

Figure 11 - 4pts linearization parameters description

Downloaded from Arrow.com.

13.2.4. 17-Pts LNR Parameters

The LNR parameters, together with the clamping values, fully define the relation (the transfer function) between the digital angle and the output signal.

The shape of the MLX90421 seventeen points transfer function from the digital angle value to the output voltage is described in the Figure 12.

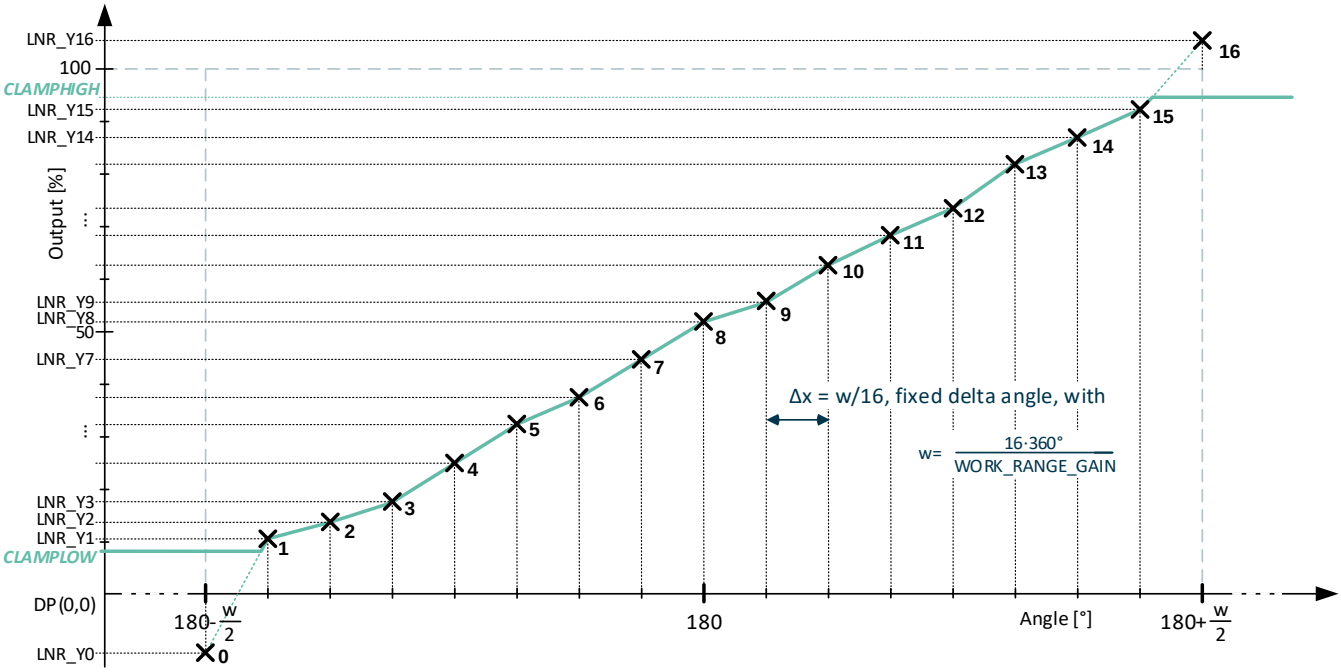

Figure 12 - 17ptslinearization parameters description

All the Y-coordinates can be programmed from −50% up to +150% to allow clamping in the middle of one segment (like on the figure), but the output value is limited to CLAMPLOW and CLAMPHIGH values.

Between two consecutive points, the output characteristic is linearly interpolated.

Downloaded from Arrow.com.

13.2.5. WORK_RANGE Parameter for Angle Range Selection

The parameter WORK_RANGE determines the input range on which the 16 segments are uniformly spread. This parameter is provided for compatibility with former versions of Melexis Triaxis® sensors.

For full featured working range selection, see section 13.2.6. For WORK_RANGE parameter, following table applies.

WORK_RANGE	Range	Δx 17pts	WORK_RANGE	Range	Δx 17pts
0	360.0°	22.5°	8	180.0°	11.3°
1	320.0°	20.0°	9	144.0°	9.0°
2	288.0°	18.0°	10	120.0°	7.5°
3	261.8°	16.4°	11	102.9°	6.4°
4	240.0°	15.0°	12	90.0°	5.6°
5	221.5°	13.8°	13	80.0°	5.0°
6	205.7°	12.9°	14	72.0°	4.5°
7	192.0°	12.0°	15	65.5°	4.1°

Table 34 - Work range for 360° periodicity

Outside of the selected range, the output will remain at clamping levels.

13.2.6. WORK_RANGE_GAIN Parameter for Angle Range Selection

Alternatively, the range for the angle can be selected using the WORK_RANGE_GAIN parameter, which applies a fixed gain to the transfer characteristics. WORK_RANGE_GAIN is coded on 8 bits where the 4 MSB define the integer part and the 4 LSB the fractional part (in power of twos). Therefore, the following equation applies to define the angle range *w*:

$$w = \frac{16 * 360}{WORK_RANGE_GAIN}$$

Both minimal and maximal angles are then defined by:

$$\theta_{min} = \frac{360 - w}{2} \; ; \; \theta_{max} = \frac{360 + w}{2}$$

where θ_{min} corresponds to the angle yielding 0% output and θ_{max} the angle giving a 100% output.

Using WORK_RANGE_GAIN parameter, the anchor point is kept at *180* and the range is symmetrically set around this value. It creates a zoom-in of the angle around this point.

Downloaded from Arrow.com.

Following tables give some values as example:

WORK_RANGE_GAIN	Factor	Range (w)	θmin	θmax	Δx 17pts
0x10	1	360°	0°	360°	22.5°
0x20	2	180°	90°	270°	11.3°
0x40	4	90°	135°	225°	5.6°
0xFF	15.94	22.6°	168.7°	191.3°	1.41°

Table 35 - Working range defined by WORK_RANGE_GAIN parameter

Outside of the working range, the output will remain at clamping levels.

13.2.7. Thermal OUTSLOPE Offset Correction

Two parameters, OUTSLOPE_HOT and OUTSLOPE_COLD, are used to add a temperature dependent offset. In the MLX90421, this offset is applied to the angle just before the clamping function.

The offset shift is computed using the device internal linearized temperature as depicted in the figure below (Figure 13).

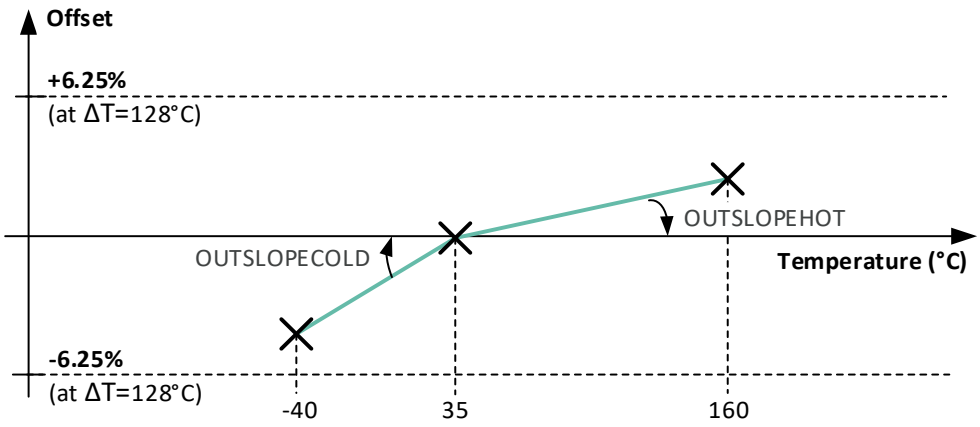

Figure 13 - Temperature compensated offset

The thermal offset can be added or subtracted to the output, before the clamping. The span of this offset is ±6.25% of the full output scale for a temperature difference of 128°C. Two thermal coefficients are defined depending on whether the linearized temperature is below (OUTSLOPE_COLD) or above (OUTSLOPE_HOT) the 35°C anchor point.

If the device internal temperature is higher than 35°C then:

$$\text{Compensated Angle} = \text{Angle} - \Delta T \cdot \frac{\text{OUTSLOPE_HOT}}{64}$$

If the device internal temperature is lower than 35°C then:

$$\text{Compensated Angle} = \text{Angle} - \Delta T \cdot \frac{\text{OUTSLOPE_COLD}}{64}$$

Each of the two thermal coefficients is encoded using an 8-bit two's complement signed format. The thermally compensated angle and the input angle are expressed in LSB12, while the linearized temperature difference ΔT is expressed in °C.

Downloaded from Arrow.com.

13.2.8. Clamping Parameters

The clamping levels are two independent values to limit the output voltage range in normal operation. The CLAMPLOW parameter adjusts the minimum output level. The CLAMPHIGH parameter sets the maximum output level. Both parameters have 12 bits of adjustment and are available for all four LNR modes. The values are encoded in fractional code, from 0% to 100%

13.3. Sensor Front-End

Parameter	Value
SENSING_MODE	[0:2]
GAINMIN	[0:47]
GAINMAX [21]	[0:48]
GAINSATURATION	[0:1]

Table 36 - Sensing mode and front-end configuration

The SENSING_MODE parameter defines which sensing mode and fields are used to calculate the angle. The different possibilities are described in the tables below. This 2-bit value selects the first (B1) and second (B2) field components according to the Table 37 content.

SENSING_MODE	B1	B2	Motion
0	X	Y	X-Y Angular Rotary
1	Y	Z	Y-Z Angular Rotary / Y Linear Position
2	X	Z	X-Z Angular Rotary / X Linear Position

Table 37 - Sensing mode description

GAINMIN and GAINMAX define the thresholds of the gain monitor diagnostic. Whenever the virtual gain is strictly outside of these limits, the diagnostic reports a fault. When GAINMIN = 0 or GAINMAX > 47, the corresponding fault reporting is disabled.

If GAINSATURATION is set, then the virtual gain is held between GAINMIN and GAINMAX values. The saturation of the gain applies before the diagnostic is checked. Therefore, the gain monitor diagnostic can be considered inactive.

13.4. Filtering

The MLX90421 features 2 low-pass FIR filter modes controlled with FILTER = 1…2. FILTER = 0 corresponds to no filtering. The transfer function is described by:

$$y_n = \frac{1}{\sum_{i=0}^{j} a_i} \sum_{i=0}^{j} a_i x_{n-i}$$

[21] *A value of 48 (0x30) or above disables the diagnostic.*

Downloaded from Arrow.com.

This filter characteristic is given in the Table 38.

FILTER	0	1	2
Type	Disable	Finite Impulse Response (FIR)	
Coefficients a_i	1	11	1111
Title	No filter	ExtraLight	Light
DSP cycles (j= nb of taps)	1	2	4
Efficiency RMS (dB)	0	3.0	6.0

Table 38 - FIR filter characteristics

13.5. Programmable Diagnostics Settings

13.5.1. Diagnostics Global Enable

DIAG_EN should be kept to its default value (1) to retain all functional safety abilities of the MLX90421. This feature shall not be disabled.

13.5.2. Diagnostic Debouncer

A debouncing algorithm is available for analog diagnostic reporting. Enabling this debouncer will increase the FHTI of the device. Therefore, Melexis recommends keeping the debouncing of analog faults off by not modifying below described values. The factory default settings mentioned in chapter 12 should be used.

Parameter	Description
DIAGDEBOUNCE_STEPDOWN	Decrement values for debouncer counter. The counter is decremented once per evaluation cycle when no analog fault is detected.
DIAGDEBOUNCE_STEPUP	Increment value for debouncer counter. The counter is incremented once per evaluation cycle when an analog fault is detected.
DIAGDEBOUNCE_THRESH	Threshold for debouncer counter to enter diagnostic mode. When set to 0, debouncing is off and analog faults are reported immediately after detection.

Table 39 - Diagnostic debouncing parameters

Once an analog monitor detects an error, it takes control of the debouncing counter. This counter will be incremented by DIAGDEBOUNCE_STEPUP value each time this specific monitor is evaluated and the error is still present. When the debouncing counter reaches the value defined by DIAGDEBOUNCE_THRESH, an error is reported on the error channel, and the debouncing counter stays clamped to this DEBOUNCE_THRESH value (see section 13.5.6 for PWM error reporting). Once the error disappears, each time its monitor is evaluated, the debouncing counter is decremented by DIAGDEBOUNCE_STEPDOWN value. When the debouncing counter reaches zero, the error disappears from the reporting channel and the debouncing counter is released. To implement proper reporting times, one should refer to the FHTI, see chapter 14.3. The reporting and recovery time are defined in the table below (valid for DIAGDEBOUNCE_THRESH > 0).

Downloaded from Arrow.com.

Parameter	Min	Max
Reporting Time	$DCT \cdot \left(\left\lceil \frac{THRESH}{STEPUP} \right\rceil - 1\right)$	$DCT \cdot \left(\left\lceil \frac{THRESH}{STEPUP} \right\rceil\right)$
Recovery Time	$DCT \cdot \left(\left\lceil \frac{THRESH}{STEPDOWN} \right\rceil\right)$	$DCT \cdot \left(\left\lceil \frac{THRESH}{STEPDOWN} \right\rceil + 1\right)$
	$\left\lceil \frac{x}{y} \right\rceil$	is the ceiling function of x divided by y

Table 40 - Diagnostic reporting and recovery times

13.5.3. Over/Under Temperature Diagnostic

DIAG_TEMP_THR_HIGH defines the threshold for over temperature detection and is compared to the linearized value of the temperature sensor T_{LIN}. DIAG_TEMP_THR_LOW defines the threshold for under temperature detection and is compared to the linearized value of the temperature sensor T_{LIN}.

One can get the physical temperature T_{PHY} of the die from T_{LIN} using following formula

$$T_{PHY}[°C] = \frac{T_{LIN}}{8} - 73.15$$

Unlike T_{LIN}, DIAG_TEMP_THR_LOW and DIAG_TEMP_THR_HIGH are encoded using 8-bit unsigned values. Therefore, a factor of 16 must be considered when comparing either threshold to T_{LIN}.

$$DIAG_TEMP_THR_(LOW/HIGH) = \frac{T_{LIN}}{16}$$

The following table summarizes the characteristics of the linearized temperature sensor and the encoding of the temperature monitor thresholds.

Parameter	Symbol	Min	Typ.	Max	Unit	Condition
T_{LIN} resolution	Res_{TLIN}	-	0.125	-	°C	12-bit range
T_{LIN} refresh rate	$F_{S,TLIN}$	-	200	-	Hz	
T_{LIN} linearity error [22]	T_{LinErr}	-8 -2	- -	8 6	°C °C	from -40 to 160°C from 35 to 125°C
Low temperature threshold	DIAG_TEMP_THR_LOW	-	8	-	LSB8	Fixed value, corresponds to -57°C
High temperature threshold	DIAG_TEMP_THR_HIGH	-	136	-	LSB8	Fixed value, corresponds to 199°C
High/low temperature threshold resolution	Res_{Tthr}	-	2	-	°C	8-bit range

Table 41 - Linearized temperature sensor characteristics

[22] *The linearity error T_{LinErr} is the maximum deviation of the measured die T_{PHY} compared to the real die temperature T_{die} over a range of temperature. At a specific die temperature, it is computed using $T_{LinErr} = T_{PHY} - T_{die}$*

Downloaded from Arrow.com.

13.5.4. High-Temperature Extension Over-Temperature Diagnostic

When operating at a junction temperature up to 175°C, the MLX90421 retains all its diagnostic features. There's no risk of false-positive. Above this temperature, the overheating monitor enters its detection range. The default configuration of this monitor reports a typical junction temperature of 199°C. Due to temperature sensor tolerances and noise at high temperatures, Melexis recommends a safety margin greater than 15°C. Consequently, if the sensor operates up to 190°C of junction temperature, Melexis cannot guarantee that the overheating monitor will not report an error and recommends to adapt the overheating monitor threshold to 207°C. This can be done by reprogramming a custom device configuration (patch) shown in Table 14 below. Contact a Melexis representative for further information.

Parameter	Patch Content
PATCH2_ADDRESS	0x396A
PATCH2_I	0x008C

Table 42 - High-temperature extension patch to prevent false-positive on overheating monitor

13.5.5. Field Strength and Field Monitoring Diagnostics

Field Strength is compensated over the circuit operating temperature range and represents a reliable image of the field intensity generated by the magnet.

13.5.6. Analog Mode Diagnostic Reporting

When in analog mode, a digital fault is reported by configuring the OUT pin in high-impedance. Conversely, an analog fault is reported by pulling the OUT pin to the V_{satD_lopp} low level (refer to Table 13).

This behavior is only valid for the factory default settings. Other reporting behaviors and further information on the safe-states are available in the safety manual of the MLX90421.

13.5.7. PWM Mode Diagnostic Reporting

When in PWM mode, a digital fault is reported by configuring the OUT pin in high-impedance.

When reporting an analog fault, the parameter PWM_DC_FAULT_BAND and PWM_DC_FAULT_VAL can be used to specify the 12-bit output level. The parameter PWM_DC_FAULT_BAND is used to define the BAND within which the output level is set.

PWM_DC_FAULT_BAND	Description
0	The Low band [0:CLAMPLOW] is selected
1	The High band [CLAMPHIGH:4095] is selected

Table 43 - Output level band selection in case of an analog fault

The parameter PWM_DC_FAULT_VAL selects a value in the specified band

$$\text{Low band output level} = \text{PWM_DC_FAULT_VAL} \cdot \left(\frac{\text{CLAMPLOW}}{8}\right)$$

$$\text{High band output level} = 4095 - \text{PWM_DC_FAULT_VAL} \cdot \left(\frac{4095 - \text{CLAMPHIGH}}{8}\right)$$

Correspondingly, the parameters PWM_DC_FIELDTOOLOW_BAND and PWM_DC_FIELDTOOLOW_VAL can be used to specify the 12-bit output level in case of a field strength too low event.

This reporting behavior is only valid for the factory default settings, with the exception of the aforementioned parameters in this section. Other reporting behaviors and further information on the safe-states are available in the safety manual of the MLX90421.

Downloaded from Arrow.com.

14. Functional Safety

14.1. Safety Manual

The safety manual, available upon request, contains the necessary information to integrate the MLX90421 component in a safety related item, as a Safety Element Out-of-Context (SEooC).

In particular, it includes:

- The description of the Product Development lifecycle tailored for the Safety Element.
- An extract of the Technical Safety concept.
- The description of Assumptions-of-Use (AoU) of the element with respect to its intended use, including:
  - assumptions on the device safe state;
  - assumptions on fault tolerant time interval and multiple-point faults detection interval;
  - assumptions on the context, including its external interfaces;
- The description of safety analysis results (at the device level, to be used for the system integration), HW architectural metrics and description of dependent failures initiators.
- The description and the result of the functional safety assessment process; list of confirmation measures and description of the independency level.

14.2. Safety Mechanisms

The MLX90421 provides numerous self-diagnostic features (safety mechanisms). Those features increase the robustness of the IC functionality either by preventing the IC from providing an erroneous output signal or by reporting the failure.

Legend
● High coverage
○ Medium coverage
ANA: Analog hardware failure reporting mode, described in the safety manual
High-Z: A special failure reporting mode where the output is set in high-impedance mode (no HW fail-safe mode/timeout, no SW safe startup)
DIG: Digital hardware failure reporting mode, described in the safety manual
At Startup: A HW fault present at time zero is detected before the first frame is transmitted.
DIAG_EN: This safety mechanism can be disabled by setting DIAG_EN = 0 (see chapter 13.5.1). This option should not be used in application mode!

Table 44 - Self diagnostic legend

Downloaded from Arrow.com.

Category and safety mechanism name	Front-end	ADC	DSP	Back-end	Support. Func.	Module & Package	Reporting mode	At startup	DIAG EN
Signal-conditioning Diagnostic	●	●	○			●			
Magnetic Signal Conditioning Voltage Test Pattern	●	○	○				ANA	NO	●
Magnetic Signal Conditioning Rough Offset Clipping check	●		○				ANA	NO	●
Magnetic Signal Conditioning Gain Monitor & Clamping	●		○			●	ANA	YES	●
Mag. Sig. Cond. Failure Control by the Chopping Technique	●						n/a	n/a	
ADC Test Pattern		●					ANA	NO	●
ADC Conversion errors & Overflow Errors		●					ANA	YES	●
ADC Common Mode Monitor		●					n/a	YES	
Flux Monitor (Rotary mode)	●	○				●	ANA	NO	●

Downloaded from Arrow.com.

Category and safety mechanism name	Front-end	ADC	DSP	Back-end	Support. Func.	Module & Package	Reporting mode	At startup	DIAG EN
Digital-circuit Diagnostic		●	●		○				
RAM Parity, 1-bit per 16-bit word, ISO D.2.5.2			●				DIG	YES	
ROM Parity, 1-bit per 32-bit word, ISO D.2.5.2			●				DIG	YES	
NVRAM 16-bit signature (run-time) ISO D.2.4.3, by means of SW CRC-CCITT16			●				DIG	NO	
NVRAM Double Error Detection ECC ISO D.2.4.1			●				DIG	YES	
Logical Monitoring of Program Sequence ISO D.2.9.3 via Watchdog "IWD" (CPU clock) ISO D.2.9.2			●		○		DIG	NO	●
Watchdog "AWD" (separate clock) ISO D2.9.1			●		○		DIG	YES	
CPU Errors "Invalid Address", "Wrong opcode"			●		○		DIG	YES	
ADC Interface Checksum		●					DIG	NO	●
ADC Internal Errors		○					DIG	YES	
DSP Test Pattern (atan2)			●		○		DIG	NO	●
Critical Ports Monitoring			●				DIG	NO	●
ADC Data Adder Test - Range Check and Buffer alignment		○					DIG	YES	●
ADC Data Adder Error		○					DIG	YES	
DSP Overflow	○	○	●				ANA	NO	●

Downloaded from Arrow.com.

Category and safety mechanism name	Front-end	ADC	DSP	Back-end	Support. Func.	Module & Package	Reporting mode	At startup	DIAG EN
System-level Diagnostic					●	●			
Supply Voltage Monitors (all supply domains except VDD_OV & POR)					●	●	ANA	YES	●
External Supply Over-voltage Monitor					●	●	High-Z	YES	
Digital Supply Under-voltage Monitor (Power-on Reset)					●	●	High-Z	YES	
Overheating Monitor	○	○	○	○	○	●	ANA	YES	●
Warning/Reporting Mechanisms									
HW Error Controller			●	●	●		DIG	n/a	
HW Fail-safe mode with timeout			●	●	●		High-Z	n/a	
Analog-type Error management	●	●			●		ANA	n/a	
Safe start-up mode			●		●		DIG	n/a	
Mechanisms executed at start-up only									
RAM March-C HW Test at start-up			●		●		DIG	YES	

Table 45 - MLX90421 list of self-diagnostics with characteristics

Downloaded from Arrow.com.

14.3. Fault Handling Time Interval

The Fault handling Time Interval (FHTI) is the time interval between the start of the first frame with invalid position value without notice, and the end of the last frame preceding a fail-safe state of the IC.

The following table provides the worst-case FHTI for both an analog fault and a digital fault in MLX90421.

Case	FHTI	Comment
Analog Fault	DCT_{ANA} + 2 T_{frame}	Refer to section 7.1 for the DCT_{ANA} value In analog mode, T_{frame} = 0ms In PWM mode, T_{frame} = T_{PWM} (see sections 11.2.2 and 13.1.3)
Digital Fault	DCT_{DIG}	Refer to section 7.1 for the DCT_{DIG} value

Table 46 - Worst-case FHTI

The FHTI values provided here are valid only for the default factory settings. A full list of timings is available in the safety manual of the MLX90421, including cycle times, execution times and reporting times for every implemented safety mechanism.

Downloaded from Arrow.com.

15. Recommended Application Diagrams

15.1. Wiring with the MLX90421 in SOIC-8 Package

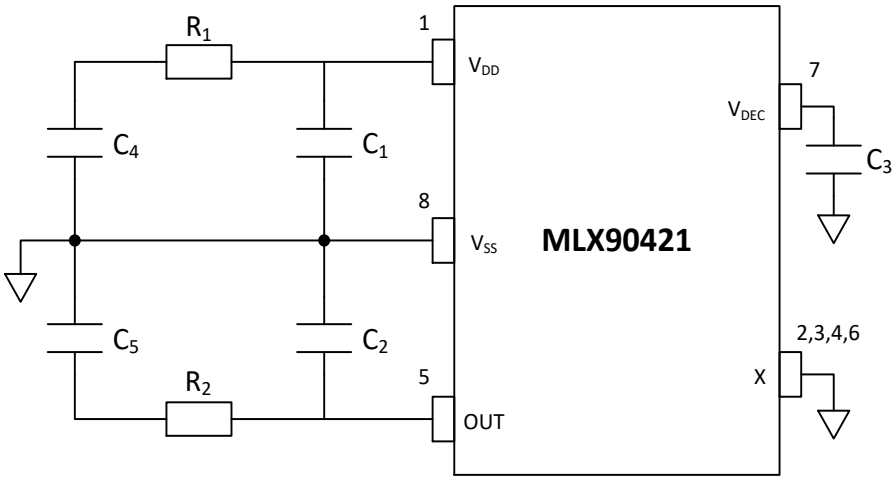

Figure 14 - Recommended wiring for the MLX90421 in SOIC-8 package

Component	Min	Typ.	Max	Remark
C_1	100nF	220 nF	-	
$C_2(C_L)$	10 nF 4.7 nF	10 nF 4.7 nF	100 nF 22 nF	Analog output PWM output
C_3	100nF	100 nF	220 nF	
C_4	-	-	1 nF	Optional, for improved EMC robustness
C_5	-	-	1 nF	
R_1	-	-	10 Ω	
R_2	-	-	-	

Table 47 - Recommended values for the MLX90421 in SOIC-8 Package

For best EMC performance, C_1, C_2 and C_3 with typical values need to be placed as close as possible to the IC. To further improve EMC robustness, a 1nF capacitor can be placed close to the connector (C_4, C_5) and a 10 Ohm resistor added in series with the supply line (R_1).

Downloaded from Arrow.com.

15.2. Wiring with the MLX90421 in TSSOP-16 Package

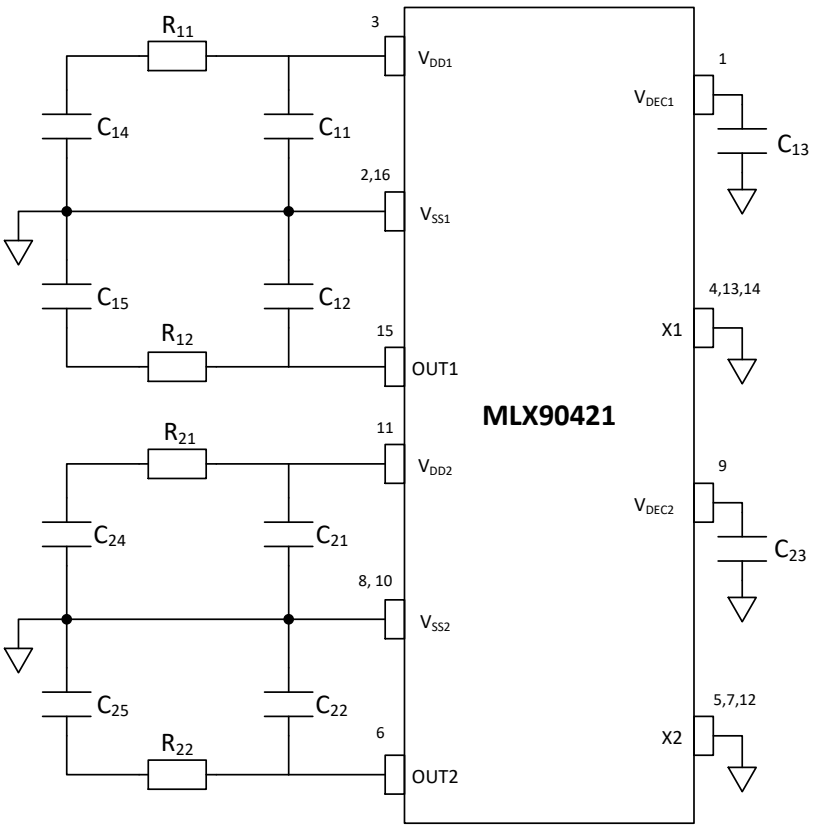

Figure 15 - Recommended wiring for the MLX90421 in TSSOP-16 package (dual die)

Component	Min	Typ.	Max	Remark
C_{x1}	100nF	220 nF	-	
$C_{x2}(C_L)$	10 nF 4.7 nF	10 nF 4.7 nF	100 nF 22 nF	Analog output PWM output
C_{x3}	100nF	100 nF	220 nF	
C_{x4}	-	-	1 nF	Optional, for improved EMC robustness
C_{x5}	-	-	1 nF	
R_{x1}	-	-	10 Ω	
R_{x2}	-	-	-	

Table 48 - Recommended values for the MLX90421 in TSSOP-16 package

For best EMC performance, C_{x1}, C_{x2} and C_{x3} with typical values need to be placed as close as possible to the IC. To further improve EMC robustness, a 1nF capacitor can be placed close to the connector (C_{x4}, C_{x5}) and a 10 Ohm resistor added in series with the supply line (R_{x1}).

Downloaded from Arrow.com.

15.3. Wiring with the MLX90421 in DMP-4 Package (built-in capacitors)

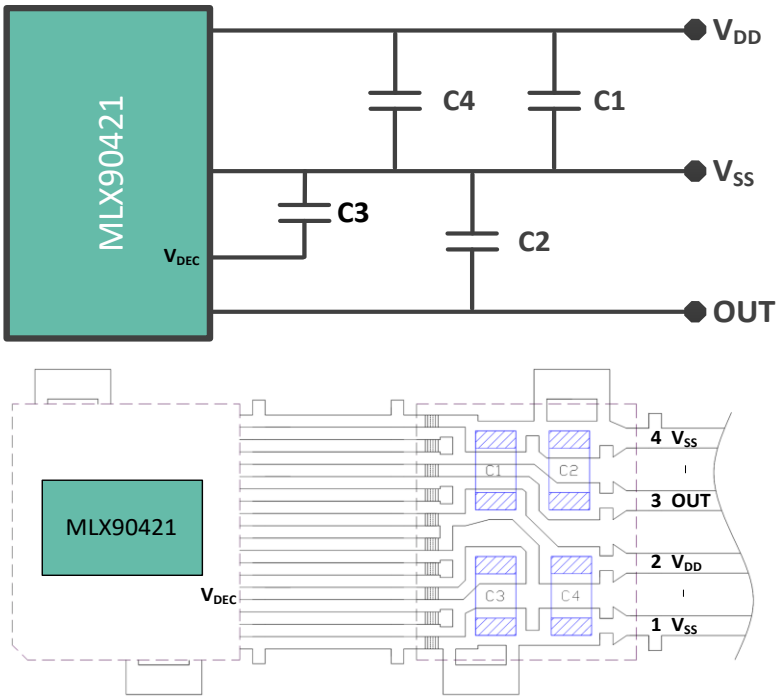

Figure 16 - Internal wiring of the MLX90421 in DMP-4

Component	Value	Remark
C1	220 nF	Supply capacitor
C2	10 nF	Output capacitor
C3	100 nF	Decoupling capacitor
C4	-	Not mounted

Table 49 - DMP-4 capacitors configuration

Downloaded from Arrow.com.

15.4. Wiring with the MLX90421 in SMP-3 Package (built-in capacitors)

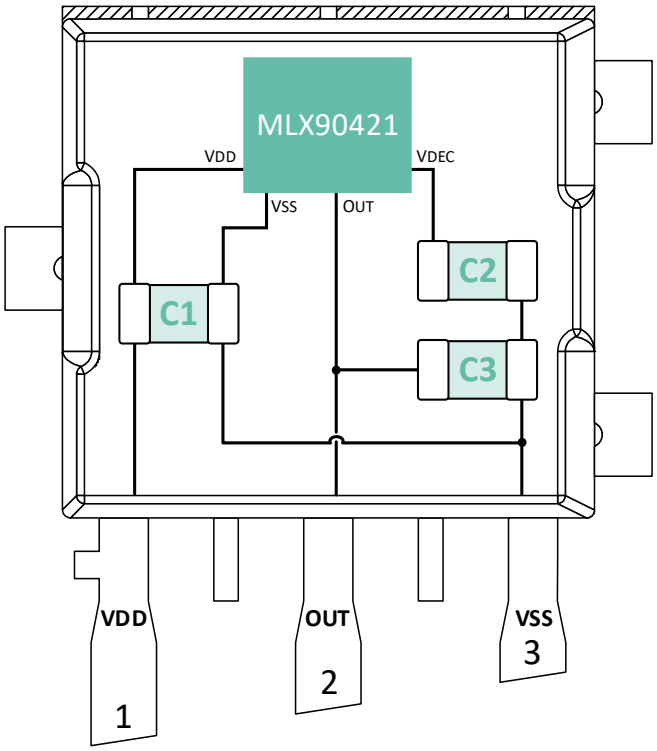

Figure 17 - Internal wiring of the MLX90421 in SMP-3

Component	Value	Remark
C1	220nF	Supply capacitor
C2	100nF	Decoupling capacitor
C3	10nF	Output capacitor

Table 50 - SMP-3 capacitors configuration

Downloaded from Arrow.com.

15.5. Wiring with the MLX90421 in SMP-4 Package (built-in capacitors)

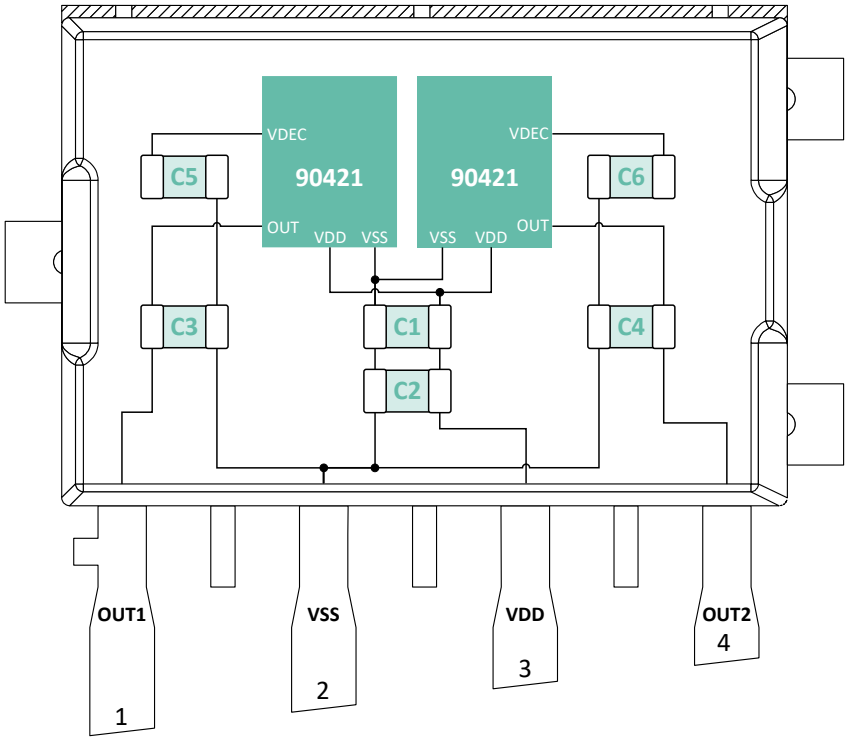

Figure 18 - Internal wiring of the MLX90421 in SMP-4

Component	Value	Remark
C1 C2	220nF	Supply capacitor
C3 C4	10nF	Output capacitor
C5 C6	100nF	Decoupling capacitor

Table 51 - SMP-4 capacitors configuration

Downloaded from Arrow.com.

16. Standard information regarding manufacturability of Melexis products with different soldering processes

Our products are classified and qualified regarding soldering technology, solderability and moisture sensitivity level according to standards in place in Semiconductor industry.

For further details about test method references and for compliance verification of selected soldering method for product integration, Melexis recommends reviewing on our web site the General Guidelines soldering recommendation (http://www.melexis.com/en/quality-environment/soldering)

For all soldering technologies deviating from the one mentioned in above document (regarding peak temperature, temperature gradient, temperature profile, etc.), additional classification and qualification tests have to be agreed upon with Melexis.

For package technology embedding trim and form post-delivery capability, Melexis recommends consulting the dedicated trim & form recommendation application note : "Lead Trimming and Forming Recommendations" (http://www.melexis.com/en/documents/documentation/application-notes/lead-trimming-and-forming-recommendations).

Melexis is contributing to global environmental conservation by promoting lead free solutions. For more information on qualifications of RoHS compliant products (RoHS = European directive on the Restriction Of the use of certain Hazardous Substances) please visit the quality page on our website: http://www.melexis.com/en/quality-environment.

17. ESD Precautions

Electronic semiconductor products are sensitive to Electro Static Discharge (ESD).

Always observe Electro Static Discharge control procedures whenever handling semiconductor products.

Downloaded from Arrow.com.

18. Package Information

18.1. SOIC-8 - Package Information

18.1.1. SOIC-8 - Package Dimensions

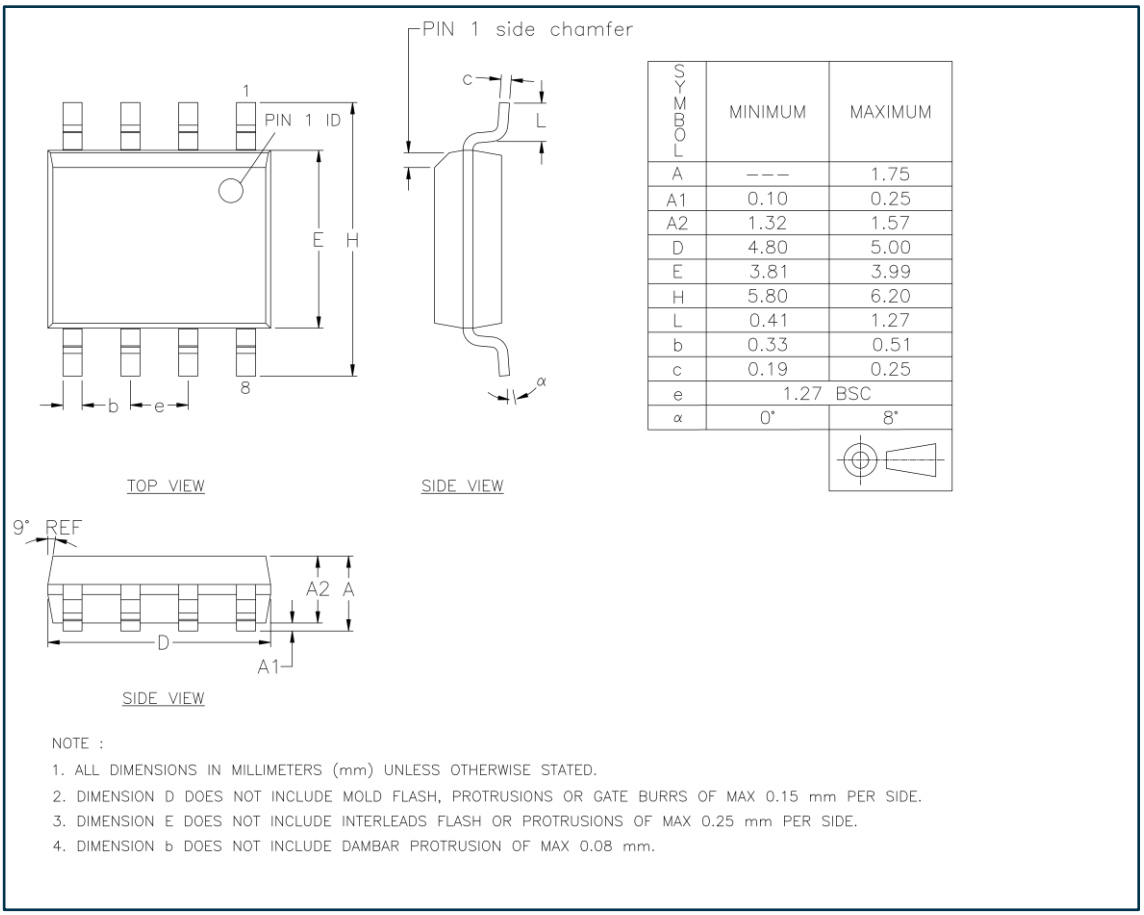

SYMBOL	MINIMUM	MAXIMUM
A	---	1.75
A1	0.10	0.25
A2	1.32	1.57
D	4.80	5.00
E	3.81	3.99
H	5.80	6.20
L	0.41	1.27
b	0.33	0.51
c	0.19	0.25
e	1.27 BSC	
α	0°	8°

Figure 19 - SOIC-8 package outline drawing

18.1.2. SOIC-8 - Pinout and Marking

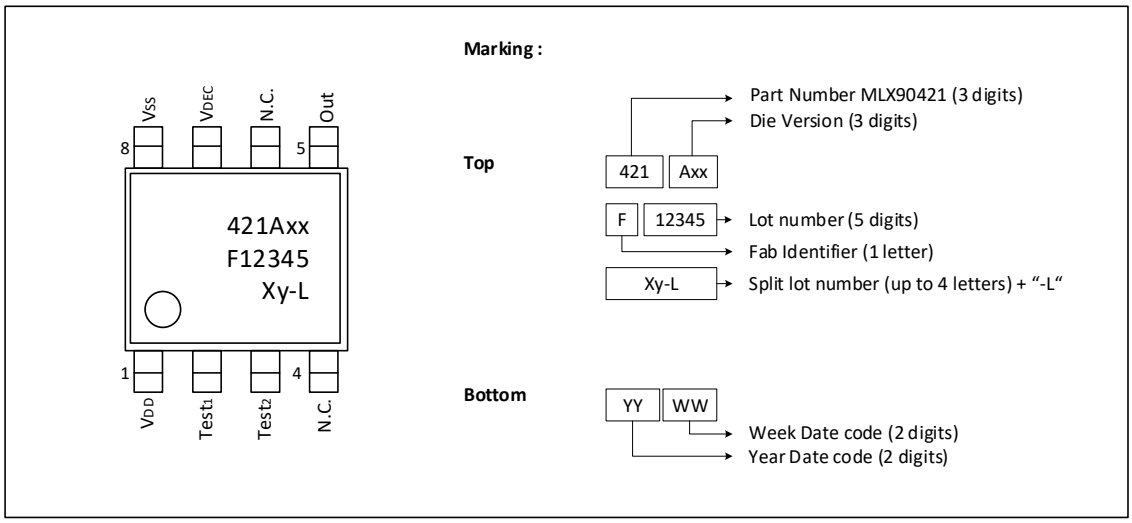

Figure 20 - SOIC-8 pinout and marking

Downloaded from Arrow.com.

18.1.3. SOIC-8 - Sensitive Spot Positioning

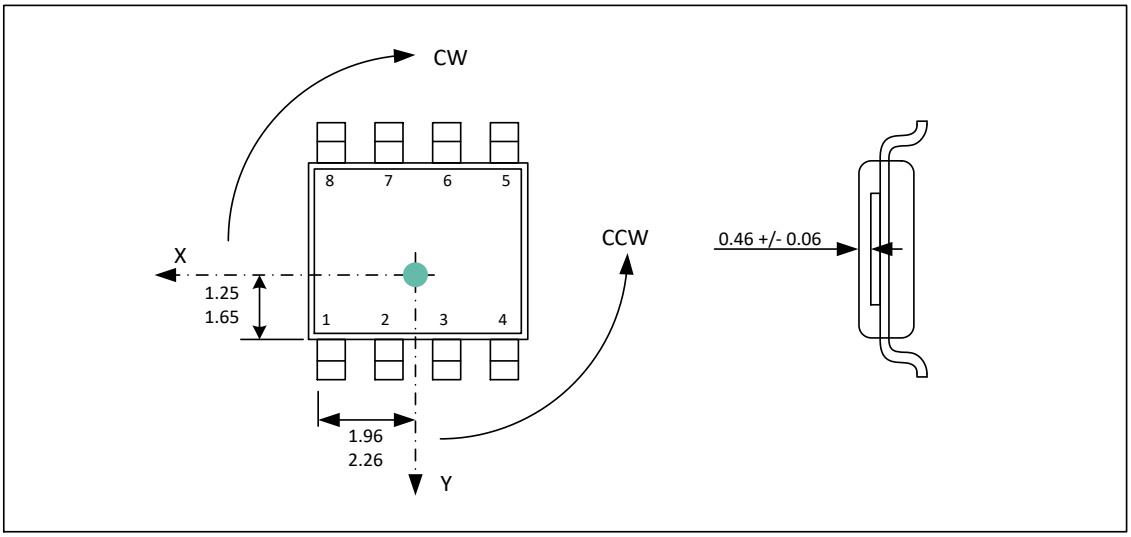

Figure 21 - SOIC-8 sensitive spot position

18.1.4. SOIC-8 - Angle Detection

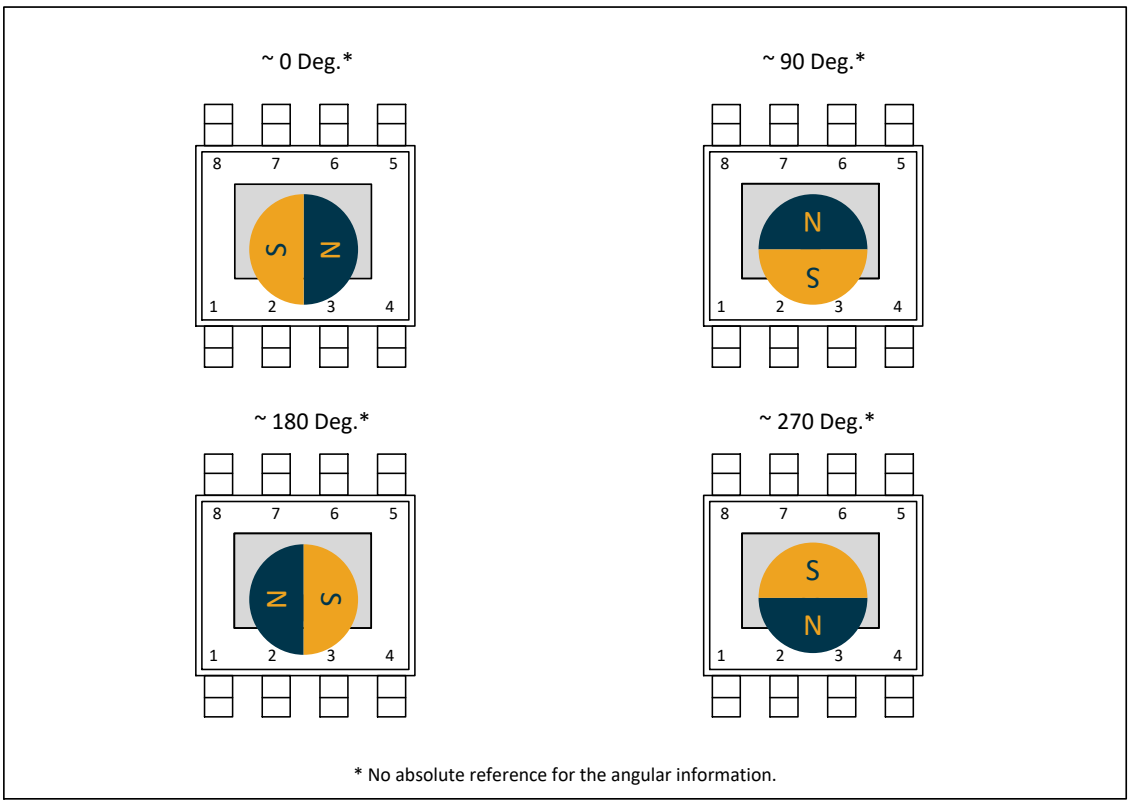

Figure 22 - SOIC-8 angle detection

The MLX90421 is an absolute angular position sensor but the linearity error (See section 9) does not include the error linked to the absolute reference 0 Deg. This reference can be fixed in the application through the discontinuity point.

Downloaded from Arrow.com.

18.2. TSSOP-16 - Package Information

18.2.1. TSSOP-16 - Package Dimensions

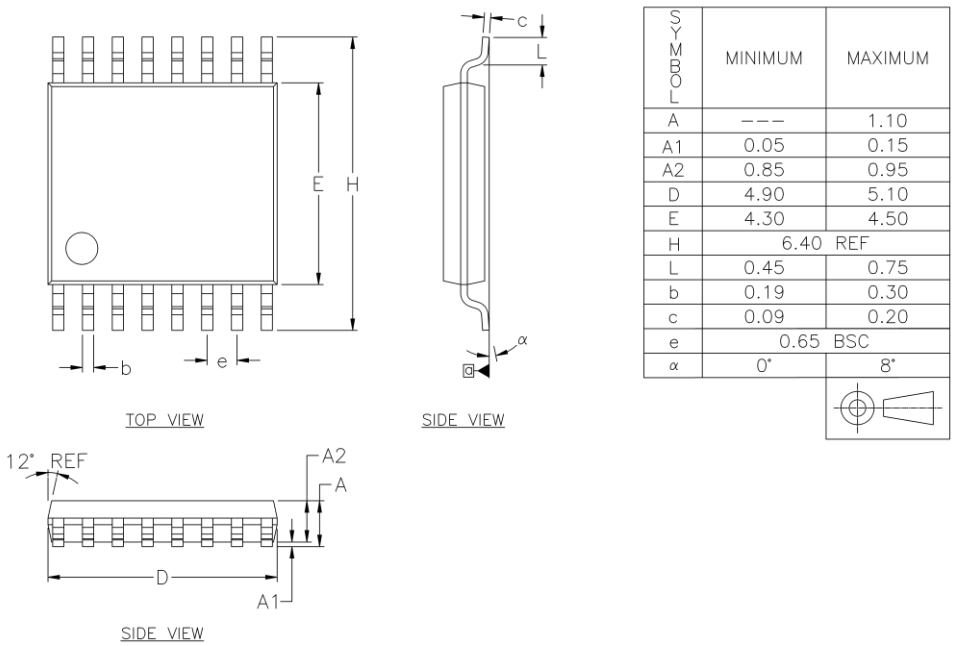

SYMBOL	MINIMUM	MAXIMUM
A	---	1.10
A1	0.05	0.15
A2	0.85	0.95
D	4.90	5.10
E	4.30	4.50
H	6.40 REF	
L	0.45	0.75
b	0.19	0.30
c	0.09	0.20
e	0.65 BSC	
α	0°	8°

NOTE :

1. ALL DIMENSIONS IN MILLIMETERS (mm) UNLESS OTHERWISE STATED.
2. DIMENSION D DOES NOT INCLUDE MOLD FLASH, PROTRUSIONS OR GATE BURRS OF MAX 0.15 mm PER SIDE.
3. DIMENSION E DOES NOT INCLUDE INTERLEADS FLASH OR PROTRUSIONS OF MAX 0.25 mm PER SIDE.
4. DIMENSION b DOES NOT INCLUDE DAMBAR PROTRUSION OF MAX 0.08 mm.
5. LEAD TO LEAD COPLANARITY MAX 0.100 MILLIMETERS (mm) WITH RESPECT TO SEATING PLANE a.

Figure 23 - TSSOP-16 package outline drawing

18.2.2. TSSOP-16 - Pinout and Marking

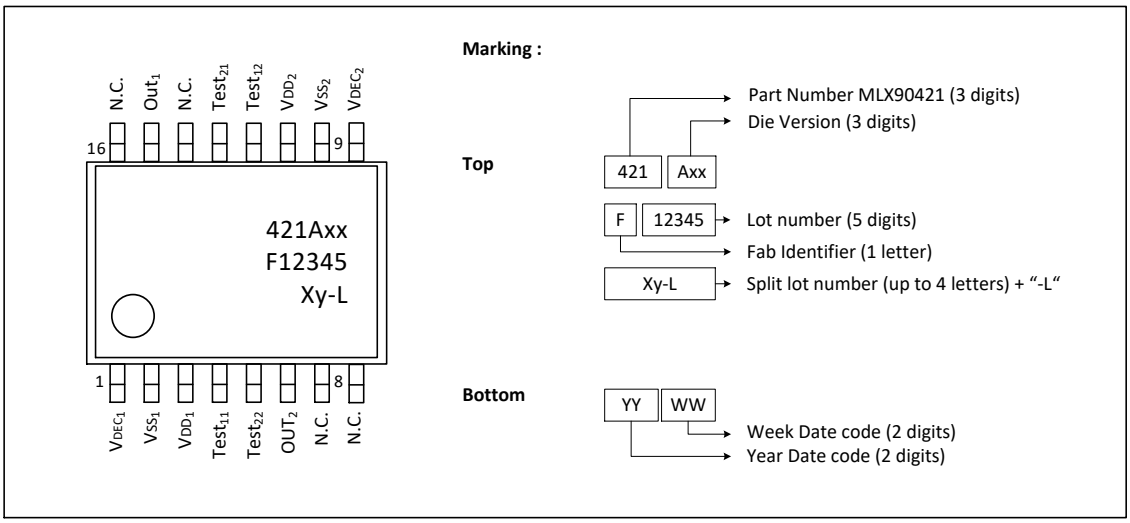

Figure 24 - TSSOP-16 pinout and marking

Downloaded from Arrow.com.

18.2.3. TSSOP-16 - Sensitive Spot Positioning

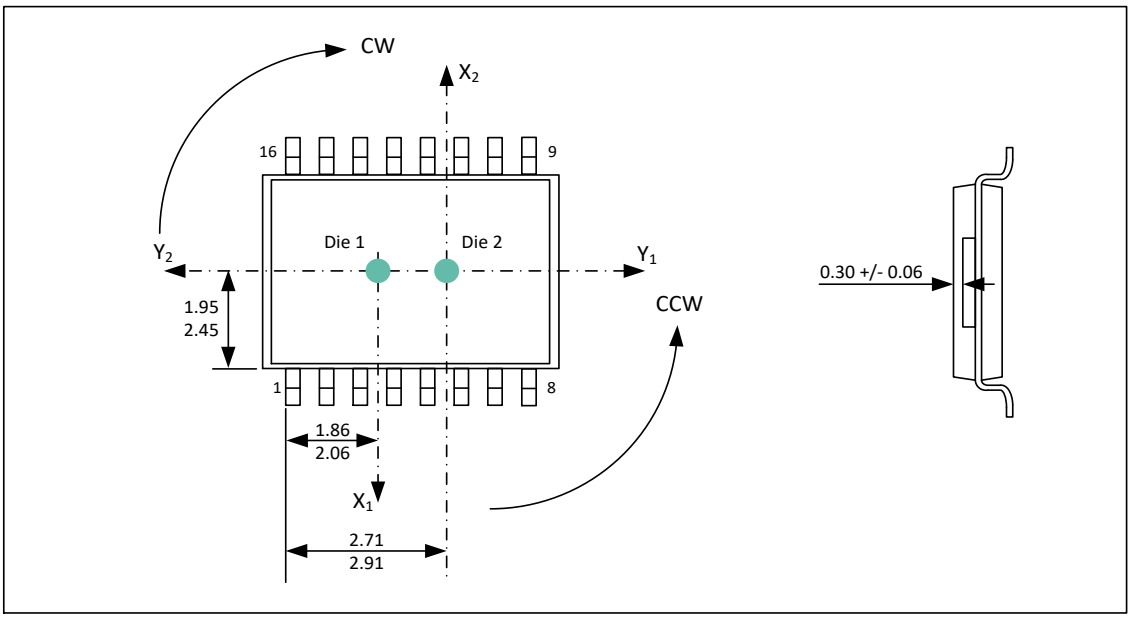

Figure 25 - TSSOP-16 sensitive spot position

18.2.4. TSSOP-16 - Angle Detection

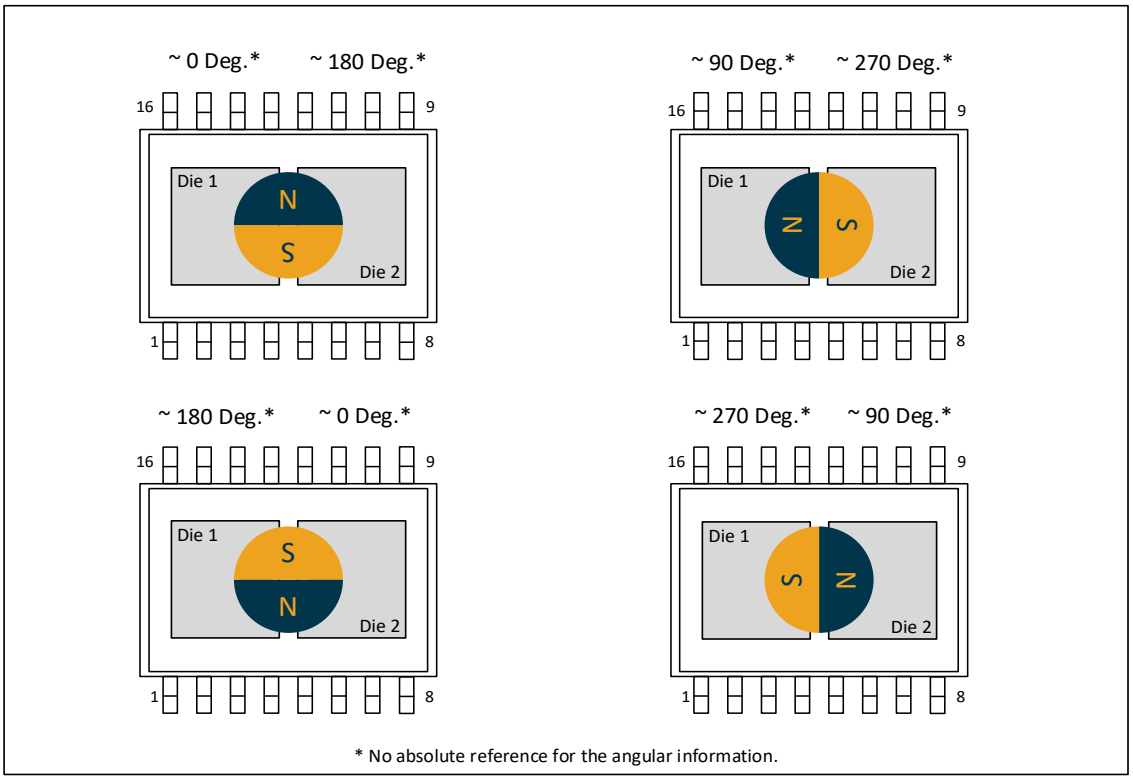

Figure 26 - TSSOP-16 angle detection

The MLX90421 is an absolute angular position sensor but the linearity error (See section 9) does not include the error linked to the absolute reference 0 Deg. This reference can be fixed in the application through the discontinuity point.

Downloaded from Arrow.com.

18.3. DMP-4 - Package Information

18.3.1. DMP-4 - Package Outline Dimensions (POD) - Straight Leads

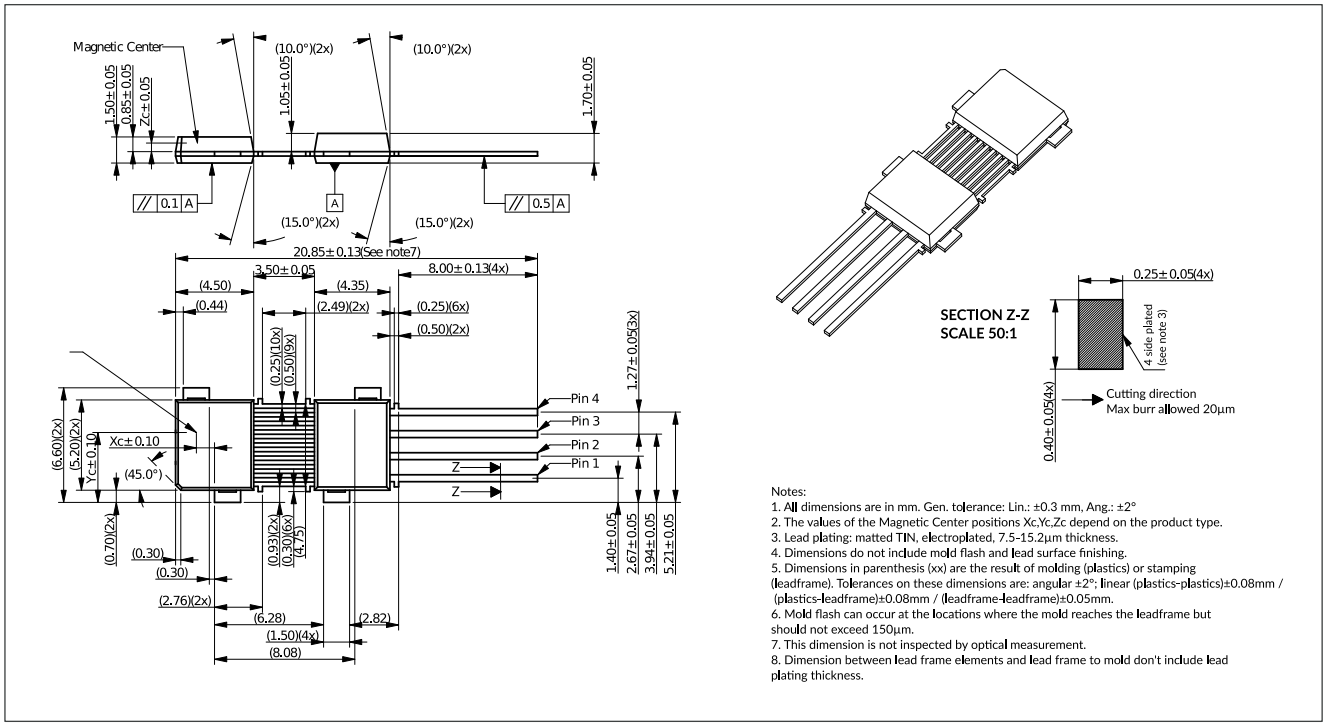

Figure 27 - DMP-4 straight leads package outline drawing

18.3.2. DMP-4 - Package Outline Dimensions (POD) - STD2 2.54

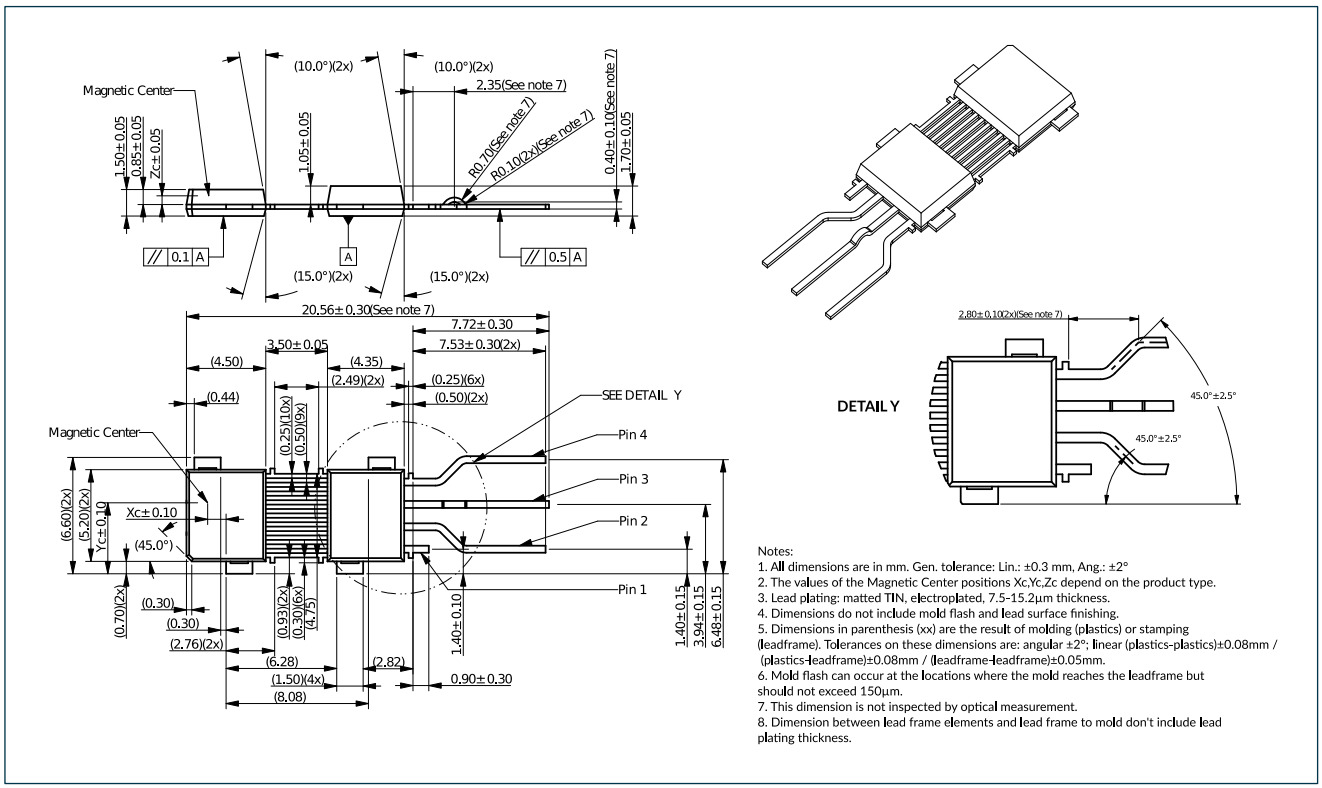

Figure 28 - DMP-4 STD2 2.54 package outline drawing

Downloaded from Arrow.com.

18.3.3. DMP-4 - Package Outline Dimensions (POD) - STD4 2.54

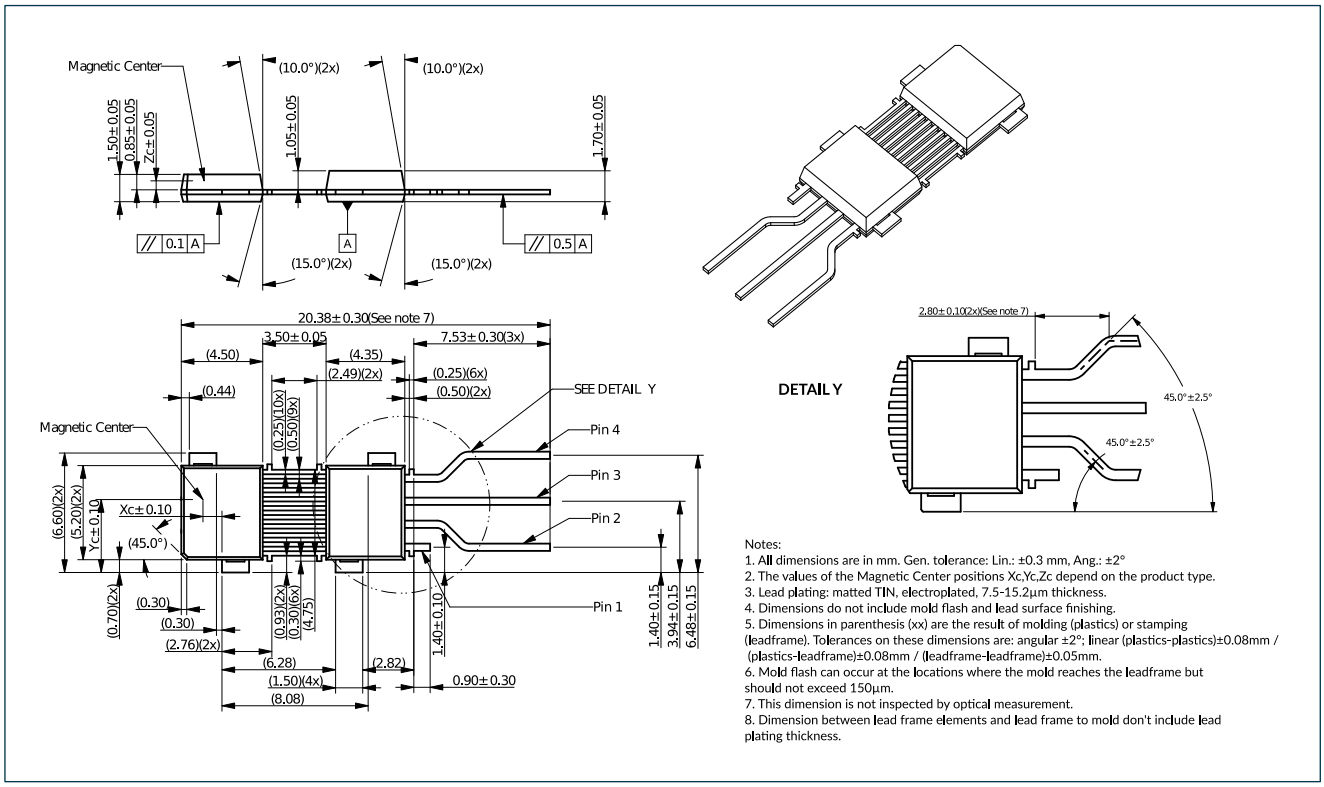

Figure 29 - DMP-4 STD4 2.54 package outline drawing

18.3.4. DMP-4 - Marking

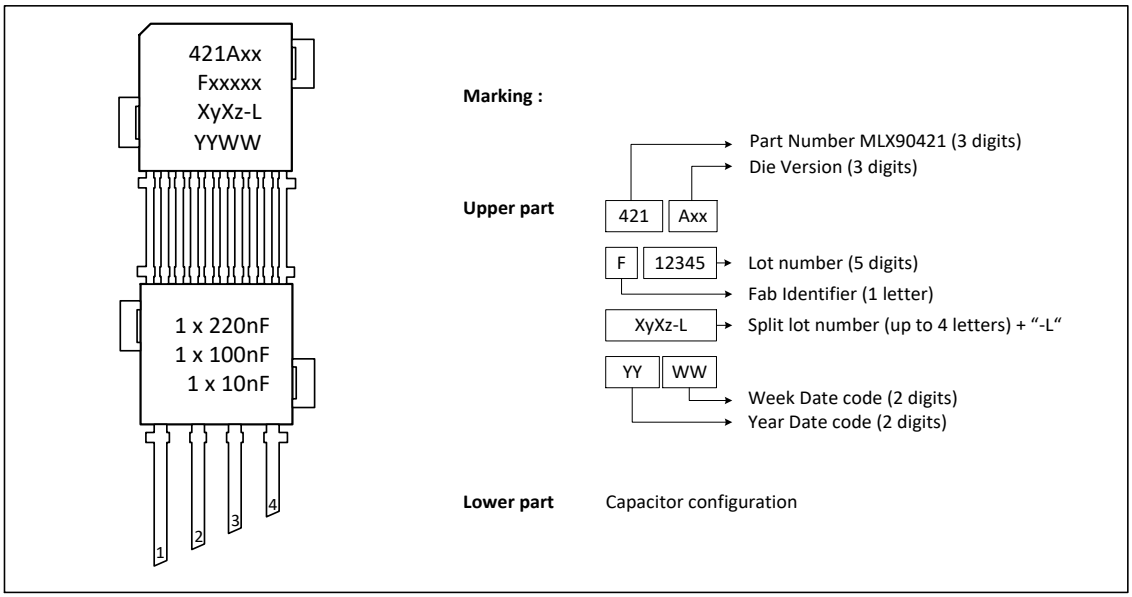

Figure 30 - DMP-4 marking

Downloaded from Arrow.com.

18.3.5. DMP-4 - Sensitive Spot Positioning

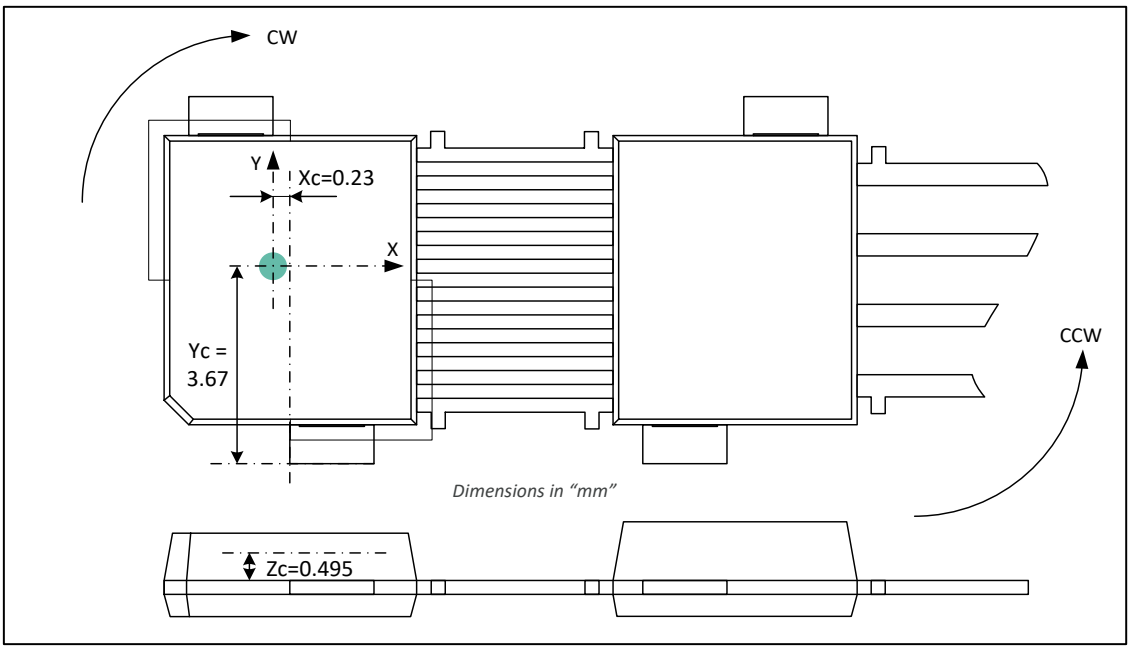

Figure 31 - DMP-4 sensitive spot position

18.3.6. DMP-4 - Angle Detection

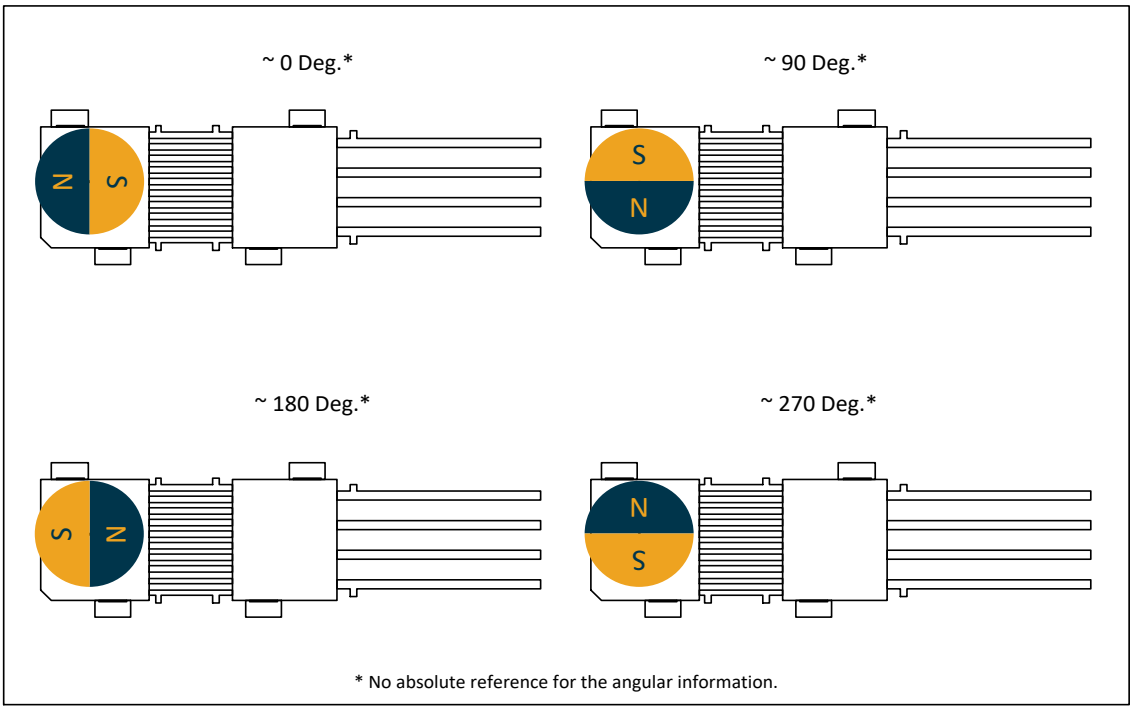

Figure 32 - DMP-4 angle detection

The MLX90421 is an absolute angular position sensor but the linearity error (See section 9) does not include the error linked to the absolute reference 0 Deg. This reference can be fixed in the application through the discontinuity point.

Downloaded from Arrow.com.

18.4. SMP-3 - Package Information

18.4.1. SMP-3 - Package Outline Dimension (POD)

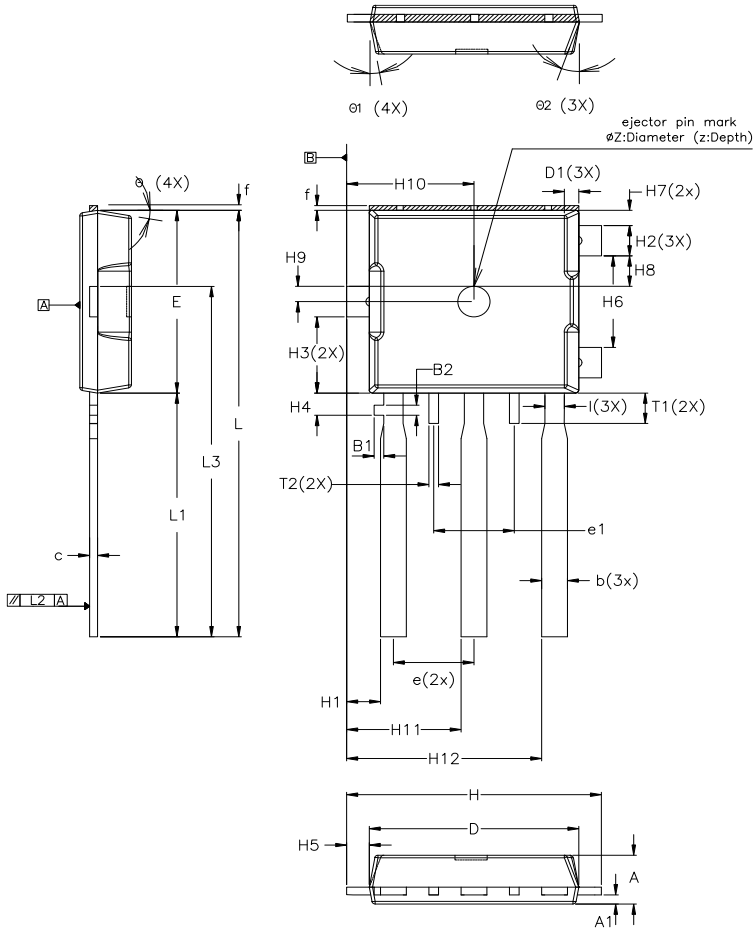

Dimension	MIN.	NOM.	MAX.
A	1.550	1.600	1.650
A1	0.250	0.290	0.330
B1	0.235	0.300	0.365
B2	0.33 REF		
c	0.250	0.280	0.310
D	6.420	6.500	6.580
D1	0.450 REF		
E	5.920	6.000	6.080
f	0.000	- - -	0.150
H	7.800	7.900	8.000
H1	0.900	1.050	1.200
H2	0.975	1.050	1.125
H3	2.380	2.475	2.570
H4	0.635	0.730	0.825
H5	0.605	0.700	0.795
H6	2.875	2.950	3.025
H7	0.475 REF		
H8	0.875	0.950	1.025
H9	0.410	0.525	0.640
H10	3.835	3.950	4.065
H11	3.400	3.550	3.700
H12	5.900	6.050	6.200

Dimension	MIN.	NOM.	MAX.
L	13.870	14.000	14.130
L1	7.870	8.000	8.130
L2	-0.250	0.000	0.250
L3	11.375	11.525	11.675
I	0.525	0.600	0.675
b	0.770	0.820	0.870
e1	2.500 BSC		
e	2.500 BSC		
Θ	8°	10°	12°
Θ1	8°	10°	12°
Θ2	18°	20°	22°
øZ	0.900	1.000	1.100
z	0.025	- - -	0.150
T1	0.870	1.000	1.130
T2	0.225	0.300	0.375

NOTES:

1. DIMENSIONS ARE IN MILLIMETER UNLESS NOTED OTHERWISE.
2. PACKAGE WIDTH DOES NOT INCLUDE MOLD FLASH, PROTRUSIONS OR GATE BURRS. MOLD FLASH, PROTRUSIONS OR GATE BURRS SHALL NOT EXCEED 0.15MM PER END. PACKAGE LENGTH DOES NOT INCLUDE INTERLEAD FLASH OR PROTRUSION. INTERLEAD FLASH OR PROTRUSION SHALL NOT EXCEED 0.25MM PER SIDE.
3. THE PACKAGE TOP MAY BE SMALLER THAN THE PACKAGE BOTTOM. PACKAGE WIDTH AND LENGTH ARE DETERMINED AT THE OUTERMOST EXTREMES OF THE PLASTIC BODY EXCLUSIVE OF MOLD FLASH, TIE BAR BURRS, GATE BURRS AND INTERLEAD FLASH.
4. PLATING SPECS: MATTED TIN, ELECTROPLATED, 12 ± 5 MICROMETER (μm) THICKNESS
5. ALL "EARS" ARE CONNECTED TO ELECTRIC GROUND.

Figure 33 - SMP-3 package outline drawing

Downloaded from Arrow.com.

18.4.2. SMP-3 - Marking

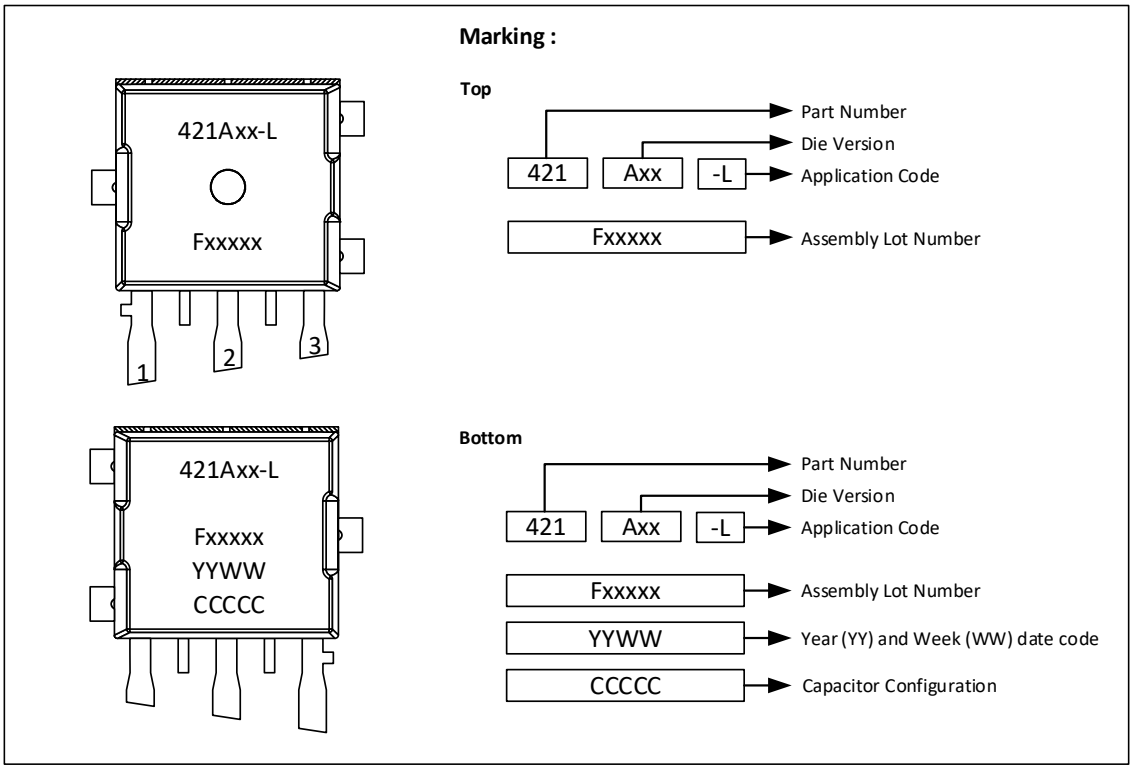

Figure 34 - SMP-3 marking

18.4.3. SMP-3 - Sensitive Spot Positioning

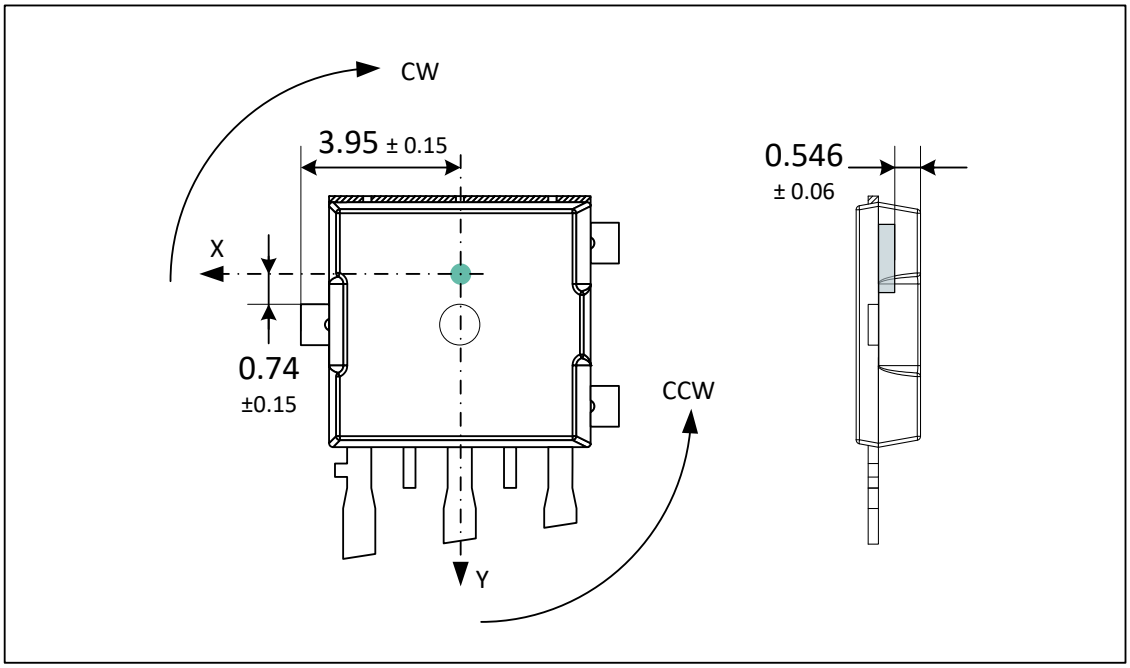

Figure 35 - SMP-3 sensitive spot position

Downloaded from Arrow.com.

18.4.4. SMP-3 - Angle Detection

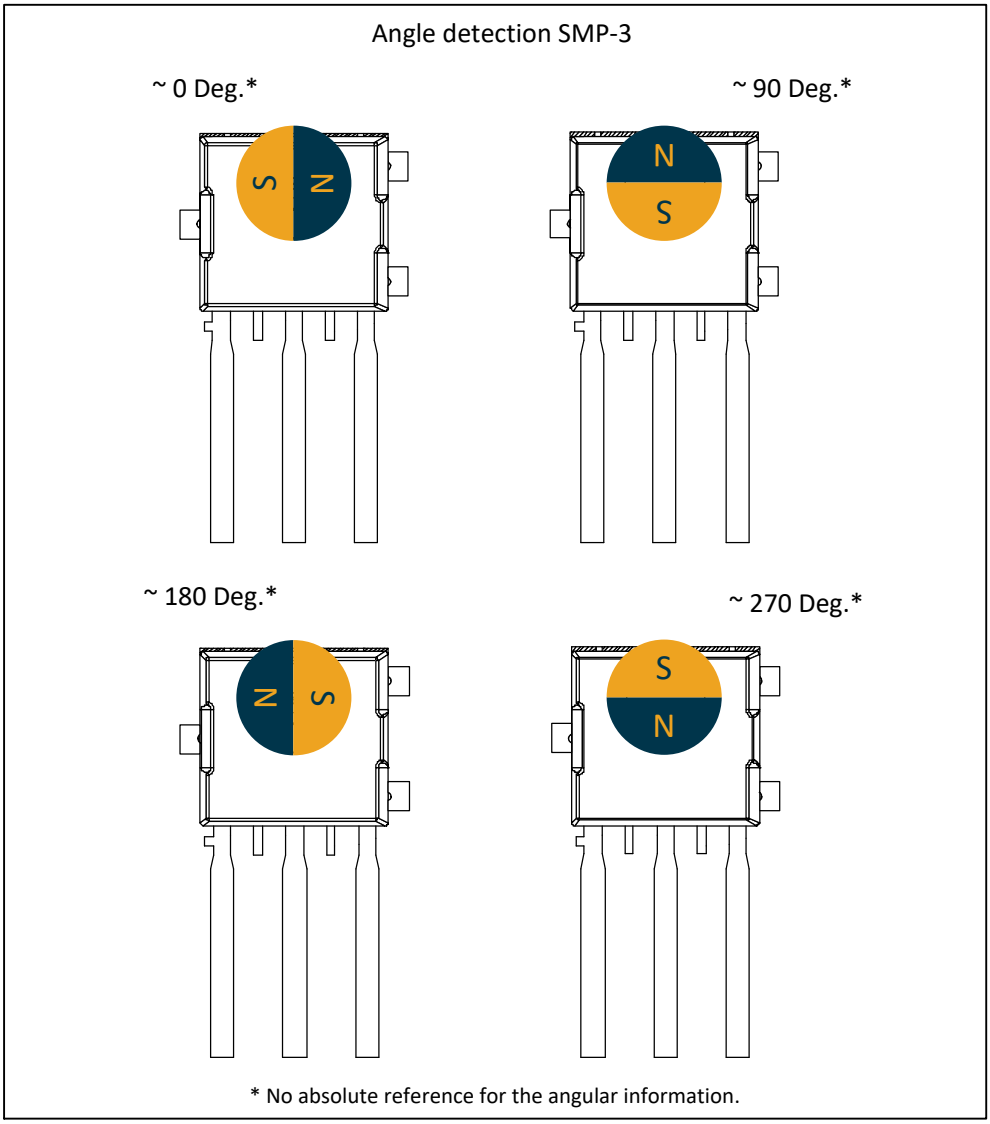

Figure 36 - SMP-3 angle detection

Downloaded from Arrow.com.

18.5. SMP-4 - Package Information

18.5.1. SMP-4 - Package Outline Dimension (POD)

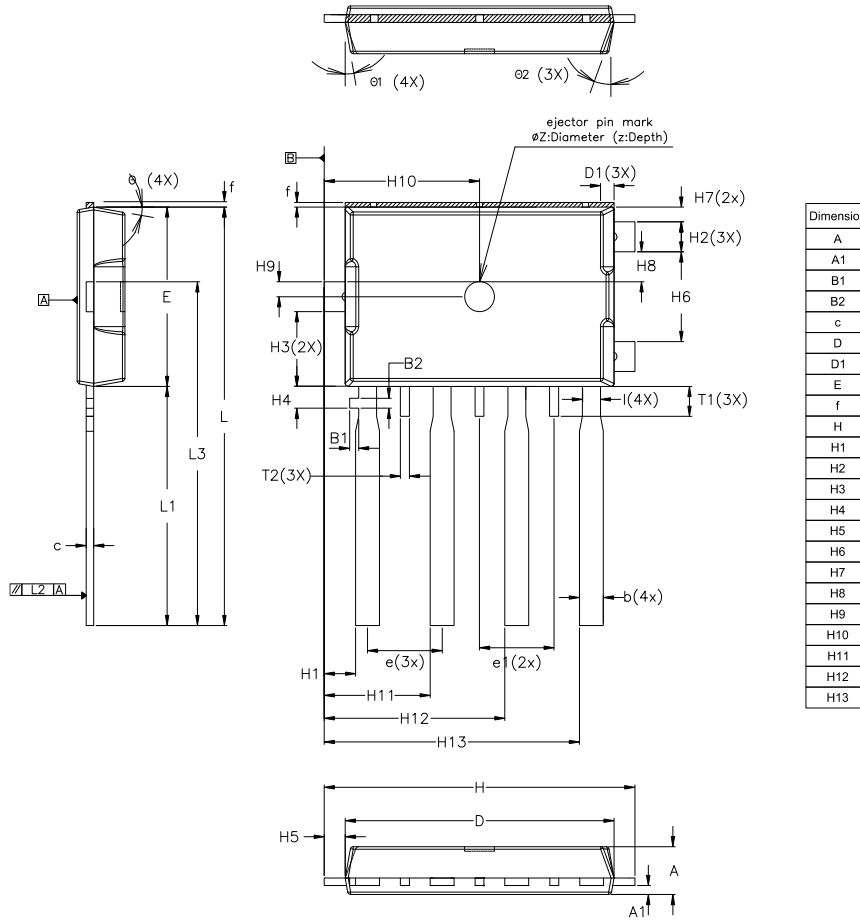

Dimension	MIN.	NOM.	MAX.
A	1.550	1.600	1.650
A1	0.250	0.290	0.330
B1	0.235	0.300	0.365
B2	0.33 REF		
c	0.250	0.280	0.310
D	8.920	9.000	9.080
D1	0.450 REF		
E	5.920	6.000	6.080
f	0.000	- - -	0.150
H	10.300	10.400	10.500
H1	0.900	1.050	1.200
H2	0.975	1.050	1.125
H3	2.380	2.475	2.570
H4	0.635	0.730	0.825
H5	0.605	0.700	0.795
H6	2.875	2.950	3.025
H7	0.475 REF		
H8	0.875	0.950	1.025
H9	0.410	0.525	0.640
H10	5.085	5.200	5.315
H11	3.400	3.550	3.700
H12	5.900	6.050	6.200
H13	8.400	8.550	8.700

Dimension	MIN.	NOM.	MAX.
L	13.870	14.000	14.130
L1	7.870	8.000	8.130
L2	-0.250	0.000	0.250
L3	11.375	11.525	11.675
I	0.525	0.600	0.675
b	0.770	0.820	0.870
e1	2.500 BSC		
e	2.500 BSC		
θ	8°	10°	12°
θ1	8°	10°	12°
θ2	18°	20°	22°
øZ	0.900	1.000	1.100
z	0.025	- - -	0.150
T1	0.870	1.000	1.130
T2	0.225	0.300	0.375

NOTES:

1. DIMENSIONS ARE IN MILLIMETER UNLESS NOTED OTHERWISE.
2. PACKAGE WIDTH DOES NOT INCLUDE MOLD FLASH, PROTRUSIONS OR GATE BURRS. MOLD FLASH, PROTRUSIONS OR GATE BURRS SHALL NOT EXCEED 0.15MM PER END. PACKAGE LENGTH DOES NOT INCLUDE INTERLEAD FLASH OR PROTRUSION. INTERLEAD FLASH OR PROTRUSION SHALL NOT EXCEED 0.25MM PER SIDE.
3. THE PACKAGE TOP MAY BE SMALLER THAN THE PACKAGE BOTTOM. PACKAGE WIDTH AND LENGTH ARE DETERMINED AT THE OUTERMOST EXTREMES OF THE PLASTIC BODY EXCLUSIVE OF MOLD FLASH, TIE BAR BURRS, GATE BURRS AND INTERLEAD FLASH.
4. PLATING SPECS: MATTED TIN, ELECTROPLATED, 12 ± 5 MICROMETER (μm) THICKNESS
5. ALL "EARS" ARE CONNECTED TO ELECTRIC GROUND.

Figure 37 - SMP-4 package outline drawing

Downloaded from Arrow.com.

18.5.2. SMP-4 - Marking

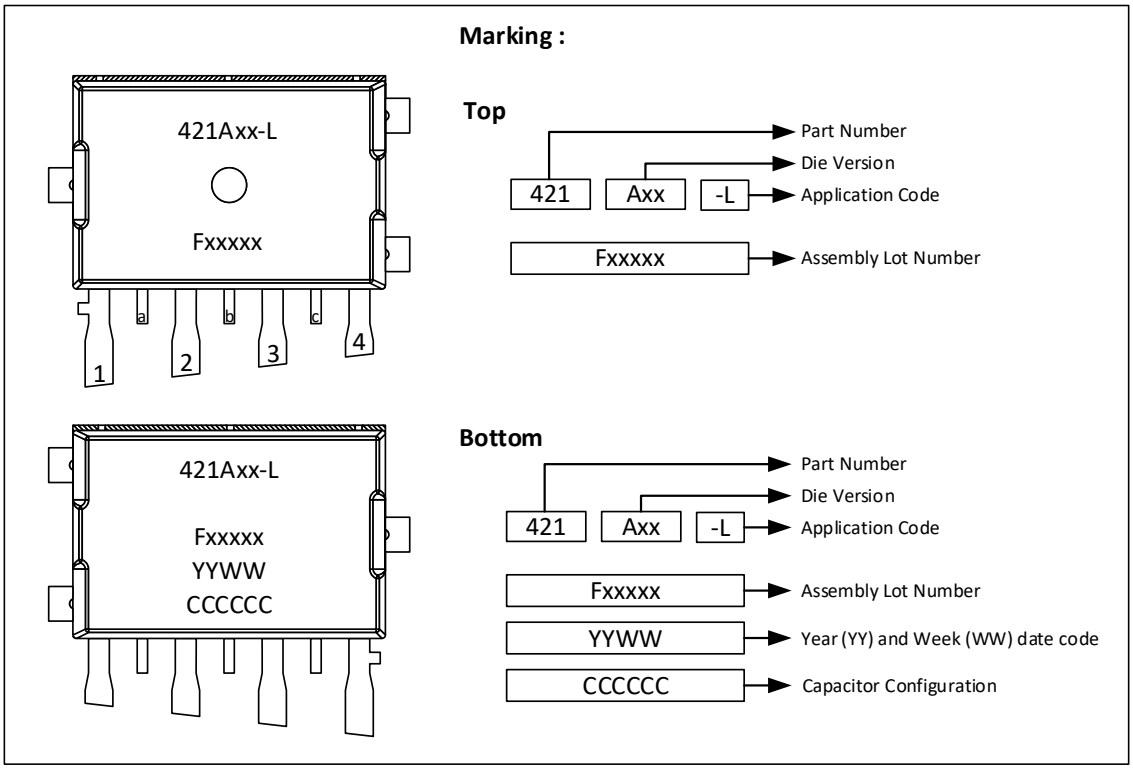

Figure 38 - SMP-4 marking

18.5.3. SMP-4 - Sensitive Spot Positioning

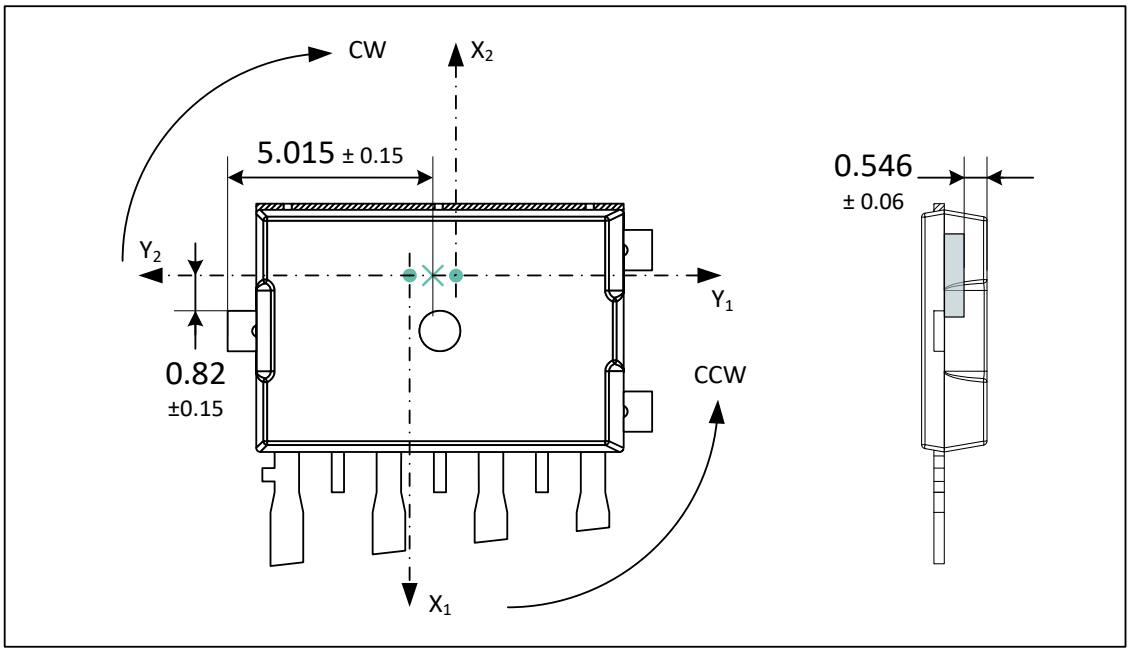

Figure 39 - SMP-4 sensitive spot position

Downloaded from Arrow.com.

18.5.4. SMP-4 - Angle Detection

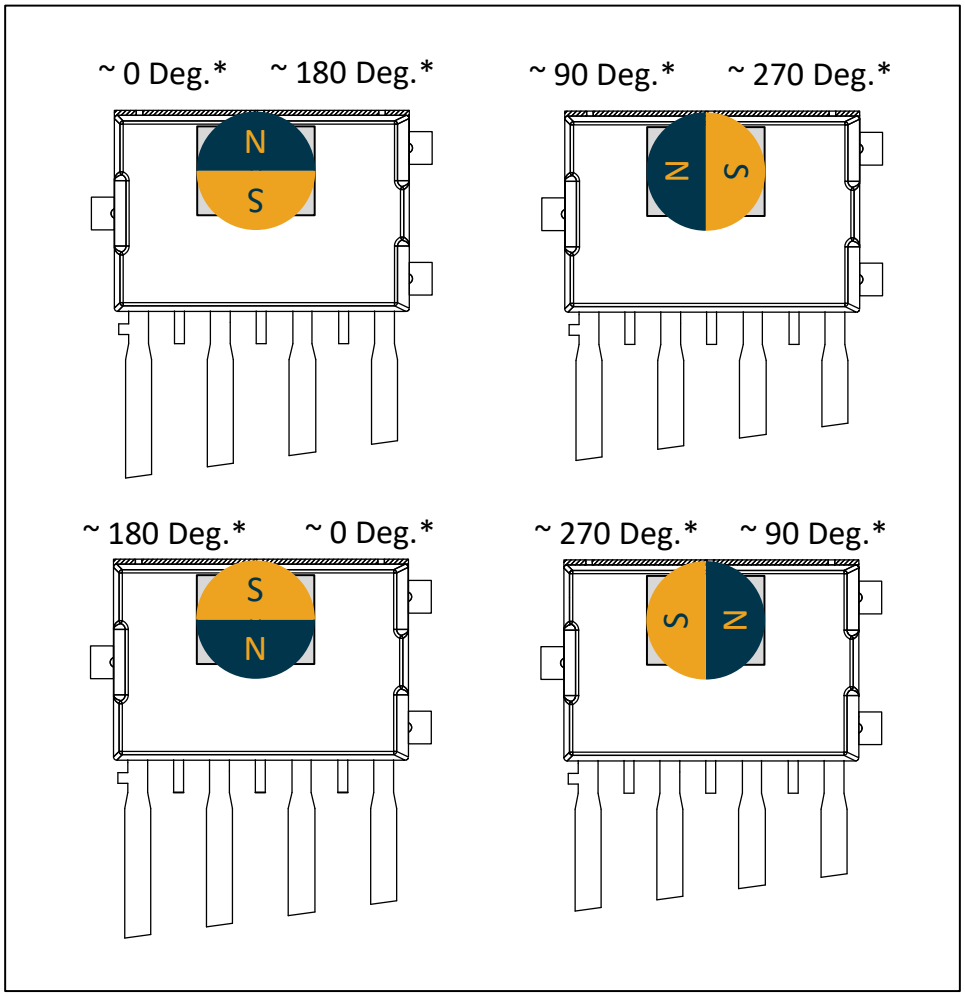

Figure 40 - SMP-4 angle detection

18.6. Packages Thermal Performances

The table below describes the thermal behavior of available packages following JEDEC EIA/JESD 51.X standard.

Package	Junction to case - θjc	Junction to ambient - θja (JEDEC 1s2p board)	Junction to ambient - θja (JEDEC 1s0p board)
SOIC-8	38.8 K/W	112 K/W	153 K/W
TSSOP-16	27.6 K/W	99.1 K/W	137 K/W
DMP-4	32.2 K/W	-	88.7 K/W [23]
SMP-3	34.4 K/W	-	206 K/W [23]
SMP-4	20.8 K/W	-	140 K/W [23]

Table 52 – Standard packages thermal performances

[23] *PCB-less solutions have been evaluated in a typical application case. Values for these packages are given as informative.*

Downloaded from Arrow.com.

19. Contact

For the latest version of this document, go to our website at melexis.com/MLX90421.

For additional information, please get in touch, melexis.com/sales-contact.

20. Disclaimer

The content of this document is believed to be correct and accurate. However, the content of this document is furnished "as is" for informational use only and no representation, nor warranty is provided by Melexis about its accuracy, nor about the results of its implementation. Melexis assumes no responsibility or liability for any errors or inaccuracies that may appear in this document. Customer will follow the practices contained in this document under its sole responsibility. This documentation is in fact provided without warranty, term, or condition of any kind, either implied or expressed, including but not limited to warranties of merchantability, satisfactory quality, non-infringement, and fitness for purpose. Melexis, its employees and agents and its affiliates' and their employees and agents will not be responsible for any loss, however arising, from the use of, or reliance on this document. Notwithstanding the foregoing, contractual obligations expressly undertaken in writing by Melexis prevail over this disclaimer.

This document is subject to change without notice, and should not be construed as a commitment by Melexis. Therefore, before placing orders or prior to designing the product into a system, users or any third party should obtain the latest version of the relevant information.

Users or any third party must determine the suitability of the product described in this document for its application, including the level of reliability required and determine whether it is fit for a particular purpose.

This document as well as the product here described may be subject to export control regulations. Be aware that export might require a prior authorization from competent authorities. The product is not designed, authorized or warranted to be suitable in applications requiring extended temperature range and/or unusual environmental requirements. High reliability applications, such as medical life-support or life-sustaining equipment or avionics application are specifically excluded by Melexis. The product may not be used for the following applications subject to export control regulations: the development, production, processing, operation, maintenance, storage, recognition or proliferation of:

1. chemical, biological or nuclear weapons, or for the development, production, maintenance or storage of missiles for such weapons;

2. civil firearms, including spare parts or ammunition for such arms;

3. defense related products, or other material for military use or for law enforcement;

4. any applications that, alone or in combination with other goods, substances or organisms could cause serious harm to persons or goods and that can be used as a means of violence in an armed conflict or any similar violent situation.

No license nor any other right or interest is granted to any of Melexis' or third party's intellectual property rights.

If this document is marked "restricted" or with similar words, or if in any case the content of this document is to be reasonably understood as being confidential, the recipient of this document shall not communicate, nor disclose to any third party, any part of the document without Melexis' express written consent. The recipient shall take all necessary measures to apply and preserve the confidential character of the document. In particular, the recipient shall (i) hold document in confidence with at least the same degree of care by which it maintains the confidentiality of its own proprietary and confidential information, but no less than reasonable care; (ii) restrict the disclosure of the document solely to its employees for the purpose for which this document was received, on a strictly need to know basis and providing that such persons to whom the document is disclosed are bound by confidentiality terms substantially similar to those in this disclaimer; (iii) use the document only in connection with the purpose for which this document was received, and reproduce document only to the extent necessary for such purposes; (iv) not use the document for commercial purposes or to the detriment of Melexis or its customers. The confidentiality obligations set forth in this disclaimer will have indefinite duration and in any case they will be effective for no less than 10 years from the receipt of this document.

This disclaimer will be governed by and construed in accordance with Belgian law and any disputes relating to this disclaimer will be subject to the exclusive jurisdiction of the courts of Brussels, Belgium.

The invalidity or ineffectiveness of any of the provisions of this disclaimer does not affect the validity or effectiveness of the other provisions. The previous versions of this document are repealed.

Melexis © - No part of this document may be reproduced without the prior written consent of Melexis. (2026)

IATF 16949 and ISO 14001 Certified

Downloaded from Arrow.com.