BZX84C2V4
THRU
BZX84C47

SURFACE MOUNT
SILICON ZENER DIODE
350mW, 2.4 THRU 47 VOLTS



SOT-23 CASE

Central Semiconductor Corp.

www.centralsemi.com

DESCRIPTION:

The CENTRAL SEMICONDUCTOR BZX84C2V4 Series are surface mount silicon Zener diodes. These high quality voltage regulating diodes are designed for use in industrial, commercial, entertainment and computer applications.

MARKING CODE: SEE ELECTRICAL CHARACTERISTICS TABLE

MAXIMUM RATINGS: (T_A=25°C)	**SYMBOL**		**UNITS**
Power Dissipation	P_D	350	mW
Operating and Storage Junction Temperature	T_J, T_{stg}	-65 to +150	°C
Thermal Resistance	Θ_{JA}	357	°C/W

ELECTRICAL CHARACTERISTICS: (T_A=25°C), V_F=0.9V MAX @ I_F=10mA (for all types)

TYPE	ZENER VOLTAGE V_Z @ I_{ZT}			TEST CURRENT	MAXIMUM ZENER IMPEDENCE			MAXIMUM REVERSE CURRENT		MAXIMUM ZENER CURRENT	MAXIMUM ZENER VOLTAGE TEMP. COEFF.	MARKING CODE
	MIN	NOM	MAX	I_{ZT}	Z_{ZT} @ I_{ZT}	Z_{ZK} @ I_{ZK}		I_R @	V_R	I_{ZM}	ΘV_Z	
	V	V	V	mA	Ω	Ω	mA	μA	V	mA	% / °C	
BZX84C2V4	2.2	2.4	2.6	5.0	100	600	1.0	50	1.0	104	-0.06	W3
BZX84C2V7	2.5	2.7	2.9	5.0	100	600	1.0	20	1.0	92	-0.06	W4
BZX84C3V0	2.8	3.0	3.2	5.0	95	600	1.0	10	1.0	83	-0.06	W5
BZX84C3V3	3.1	3.3	3.5	5.0	95	600	1.0	5.0	1.0	76	-0.06	W6
BZX84C3V6	3.4	3.6	3.8	5.0	90	600	1.0	5.0	1.0	69	-0.06	W7
BZX84C3V9	3.7	3.9	4.1	5.0	90	600	1.0	3.0	1.0	64	-0.06	W8
BZX84C4V3	4.0	4.3	4.6	5.0	90	600	1.0	3.0	1.0	58	-0.05	W9
BZX84C4V7	4.4	4.7	5.0	5.0	80	500	1.0	3.0	2.0	53	-0.03	Z1
BZX84C5V1	4.8	5.1	5.4	5.0	60	480	1.0	2.0	2.0	49	0.02	Z2
BZX84C5V6	5.2	5.6	6.0	5.0	40	400	1.0	1.0	2.0	45	0.03	Z3
BZX84C6V2	5.8	6.2	6.6	5.0	10	150	1.0	3.0	4.0	40	0.04	Z4
BZX84C6V8	6.4	6.8	7.2	5.0	15	80	1.0	2.0	4.0	37	0.05	Z5
BZX84C7V5	7.0	7.5	7.9	5.0	15	80	1.0	1.0	5.0	33	0.05	Z6
BZX84C8V2	7.7	8.2	8.7	5.0	15	80	1.0	0.7	5.0	30	0.06	Z7
BZX84C9V1	8.5	9.1	9.6	5.0	15	100	1.0	0.5	6.0	27	0.06	Z8
BZX84C10	9.4	10	10.6	5.0	20	150	1.0	0.2	7.0	25	0.07	Z9

Tolerance Code	Tolerance
A	±1%
B	±2%

Part Number Identification

BZX84 C 4V7

- 4V7 — Nominal Value Code(i.e. 4.7 Volts)
- C — Tolerance Code
- BZX84 — Device Series

R7 (20-November 2009)

Downloaded from Arrow.com.

BZX84C2V4
THRU
BZX84C47

SURFACE MOUNT
SILICON ZENER DIODE
350mW, 2.4 THRU 47 VOLTS

ELECTRICAL CHARACTERISTICS - Continued: (T_A=25°C), V_F=0.9V MAX @ I_F=10mA (for all types)

TYPE	ZENER VOLTAGE V_Z @ I_{ZT}			TEST CURRENT	MAXIMUM ZENER IMPEDENCE			MAXIMUM REVERSE CURRENT		MAXIMUM ZENER CURRENT	MAXIMUM ZENER VOLTAGE TEMP. COEFF.	MARKING CODE
	MIN	NOM	MAX	I_{ZT}	Z_{ZT} @ I_{ZT}	Z_{ZK} @ I_{ZK}		I_R @	V_R	I_{ZM}	ΘV_Z	
	V	V	V	mA	Ω	Ω	mA	μA	V	mA	% / °C	
BZX84C11	10.4	11	11.6	5.0	20	150	1.0	0.1	8.0	23	0.07	Y1
BZX84C12	11.4	12	12.7	5.0	25	150	1.0	0.1	8.0	21	0.07	Y2
BZX84C13	12.4	13	14.1	5.0	30	170	1.0	0.1	8.0	19	0.08	Y3
BZX84C15	13.8	15	15.6	5.0	30	200	1.0	0.05	10.5	17	0.08	Y4
BZX84C16	15.3	16	17.1	5.0	40	200	1.0	0.05	11.2	16	0.08	Y5
BZX84C18	16.8	18	19.1	5.0	45	225	1.0	0.05	12.6	14	0.08	Y6
BZX84C20	18.8	20	21.2	5.0	55	225	1.0	0.05	14.0	12	0.08	Y7
BZX84C22	20.8	22	23.3	5.0	55	250	1.0	0.05	15.4	11	0.09	Y8
BZX84C24	22.8	24	25.6	5.0	70	250	1.0	0.05	16.8	10	0.09	Y9
BZX84C27	25.1	27	28.9	2.0	80	300	0.5	0.05	18.9	9	0.09	Y10
BZX84C30	28.0	30	32.0	2.0	80	300	0.5	0.05	21.0	8	0.09	Y11
BZX84C33	31.0	33	35.0	2.0	80	325	0.5	0.05	23.1	7	0.09	Y12
BZX84C36	34.0	36	38.0	2.0	90	350	0.5	0.05	25.2	6.9	0.09	Y13
BZX84C39	37.0	39	41.0	2.0	130	350	0.5	0.05	27.3	6.4	0.09	Y14
BZX84C43	40.0	43	46.0	2.0	150	375	0.5	0.05	30.1	5.8	0.10	Y15
BZX84C47	44.0	47	50.0	2.0	170	375	0.5	0.05	32.9	5.3	0.10	Y16

SOT-23 CASE - MECHANICAL OUTLINE

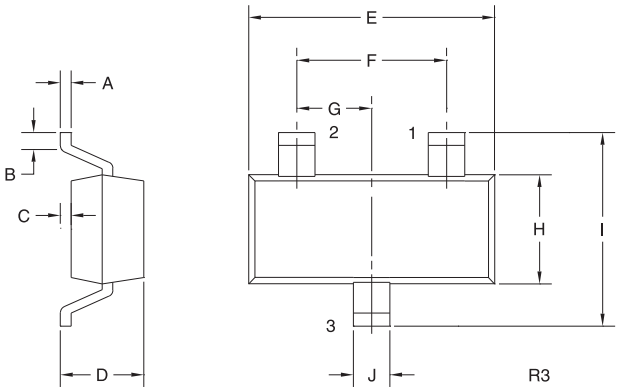

DIMENSIONS				
	INCHES		MILLIMETERS	
SYMBOL	MIN	MAX	MIN	MAX
A	0.003	0.007	0.08	0.18
B	0.006	-	0.15	-
C	-	0.005	-	0.13
D	0.035	0.043	0.89	1.09
E	0.110	0.120	2.80	3.05
F	0.075		1.90	
G	0.037		0.95	
H	0.047	0.055	1.19	1.40
I	0.083	0.098	2.10	2.49
J	0.014	0.020	0.35	0.50

SOT-23 (REV: R3)

LEAD CODE:
1) ANODE
2) NO CONNECTION
3) CATHODE

R7 (20-November 2009)

Downloaded from Arrow.com.

Package Details
SOT-23 Case

Mechanical Drawing

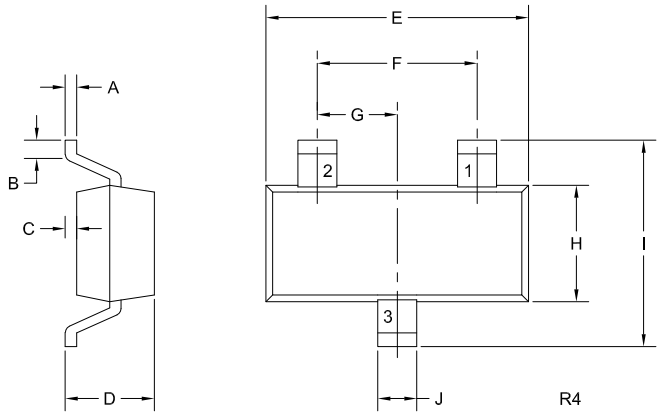

DIMENSIONS				
	INCHES		MILLIMETERS	
SYMBOL	MIN	MAX	MIN	MAX
A	0.003	0.007	0.08	0.18
B	0.006	-	0.15	-
C	-	0.005	-	0.13
D	0.035	0.044	0.89	1.12
E	0.110	0.120	2.80	3.05
F	0.075		1.90	
G	0.037		0.95	
H	0.047	0.055	1.19	1.40
I	0.083	0.104	2.10	2.64
J	0.014	0.020	0.35	0.50

SOT-23 (REV: R4)

Lead Code:
Reference individual device datasheet.

Part Marking: 2-4 Character Alpha/Numeric Code

Mounting Pad Geometry (Dimensions in mm)

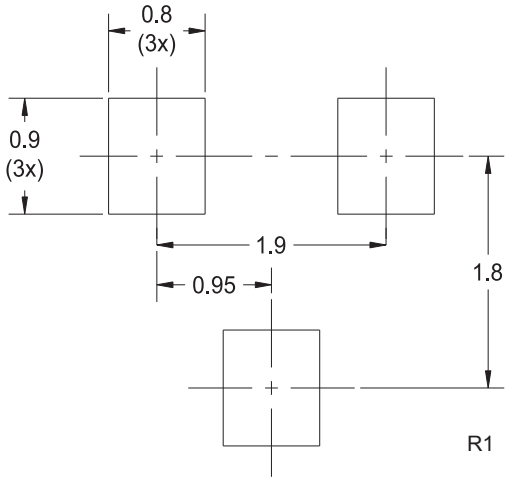

R4 (27-August 2021)

Downloaded from Arrow.com.

Package Details
SOT-23 Case

Tape Dimensions and Orientation (Dimensions in mm)

Tape Width: 8mm

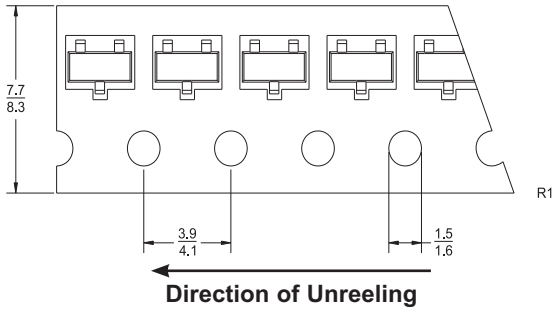

Devices are taped in accordance with Electronic Industries Association Standard EIA-481-D

Packaging Base

7” Reel = 3,000 pcs.
13” Reel = 10,000 pcs.

Reel Labeling Information

Each reel is labeled with the following information:
Central Part Number, Customer Part Number, Purchase Order Number, Quantity, Lot Number, Date Code, Ship Date and Marking Code.

Reel Packing Information

Reel Size	Reels per Box (Maximum)	Parts per Box (Maximum)	Box Dimensions		Shipping Weight (Max.)	
			INCH	CM	LB	KG
7”	9	27,000	9x9x5	23x23x13	3	2
	18	54,000	9x9x9	23x23x23	6	3
	40	120,000	21x9x9	53x23x23	13	6
	108	324,000	27x9x17	69x23x43	34	16
13”	6	60,000	15x4x15	38x10x38	6	3
	14	140,000	15x15x9	38x38x23	15	7
	26	260,000	15x15x18	38x38x46	28	13

Ordering Information

- For devices taped and reeled on 7” reels, add TR suffix to part number.
- For devices taped and reeled on 13” reels, add TR13 suffix to part number.
- All SMDs are available in small quantities for prototype and manual placement applications.

Downloaded from Arrow.com.

Material Composition Specification

SOT-23 Case



Device average mass . . . . . **8.5 mg**

Fluctuation margin . . . . . **+/-10%**

Component	Material	Material		Substance	CAS No.	Substance		
		(%wt)	(mg)			(%wt)	(mg)	(ppm)
active device	doped Si	2.71%	0.23	Si	7440-21-3	2.71%	0.23	27,059
bond wire	gold or copper	0.25%	0.021	Au	7440-57-5	0.25%	0.021	2,471
				Cu	7440-50-8			
leadframe	alloy 42	25.4%	2.159	Fe	7439-89-6	14.99%	1.274	149,882
				Ni	7440-02-0	10.41%	0.885	104,118
leadframe plating	silver	0.71%	0.06	Ag	7440-22-4	0.71%	0.06	7,059
encapsulation*	EMC	68.94%	5.86	silica	7631-86-9	46.87%	3.984	468,706
				epoxy resin	29690-82-2	13.79%	1.172	137,882
				phenol resin	9003-35-4	6.89%	0.586	68,941
				Sb_2O_3	1309-64-4	0.69%	0.059	6,941
				Br	7726-95-6	0.69%	0.059	6,941
	EMC GREEN	68.94%	5.86	silica (fused)	60676-86-0	53.08%	4.512	530,824
				epoxy resin	29690-82-2	6.89%	0.586	68,941
				phenol resin	9003-35-4	6.68%	0.568	66,824
				carbon black	1333-86-4	0.21%	0.018	2,118
				metal hydroxide	1309-42-8	2.07%	0.176	20,706
plating**	tin/lead process	2.0%	0.17	Sn	7440-31-5	1.59%	0.135	15,882
				Pb	7439-92-1	0.41%	0.035	4,118
	matte tin	2.0%	0.17	Sn	7440-31-5	2.0%	0.17	20,000

*EMC GREEN molding compound is Halogen-Free.

**For Lead Free plating, add suffix “PB FREE” to part number.
For Tin/Lead plating, add suffix “TIN/LEAD” to part number.
No suffix designation allows for the supply of either lead-free or tin/lead plated product depending on availability.

Disclaimer
The information provided in this Material Composition data sheet is, to the best of our knowledge, correct. However, there is no guarantee to completeness or accuracy, as some information is derived from data sources outside the company.

Downloaded from Arrow.com.