OA225AP-IP68

AC Fan, 115, 230V
225x240x80mm (8.9”x9.4”x3.1”)

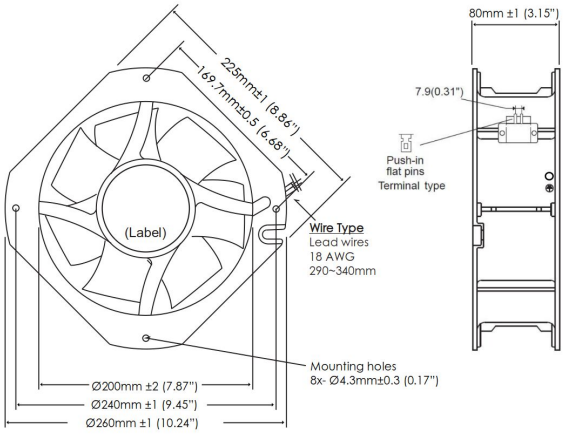

Frame	Die Cast Aluminum, Black
Impeller	Steel, All Metal, 7 blades
Connection	Lead wires 18 AWG or Terminal
Motor	AC, Capacitor Induction, Outer Rotor, 1-Phase, Thermal Protected, IP68
Bearing System	Dual Ball Bearings
Dielectric Strength	1500VAC/min
Insulation Resistance	Over 100MΩ at DC 500V

Operating Temperature
-30°C ~ +80°C

Storage Temperature
-40°C ~ +100°C

Life Expectancy
45,000 hours (L10 at 55°C)

Weight: 4.81 lbs

m0

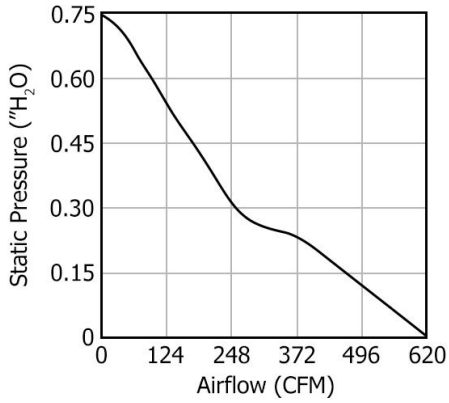

Part Number	Rated Voltage	Input Power	Frequency	Rated Speed (RPM)	Airflow (CFM)	Noise Level (dB)	Max. Static Pressure
OA225AP-11-1*B1868	115 VAC	80 W	60 Hz	3100	620	66	0.74”H_2O
OA225AP-22-1*B1868	230 VAC	80 W	60 Hz	3100	620	66	0.74”H_2O

**Insert T for Terminal or W for Lead Wires*

Knight Electronics, Inc.
10557 Metric Drive
Dallas, TX 75243
214-340-0265

Orion Fans
Information and data is subject to change without prior notification

Downloaded from Arrow.com.