Copyright FCI.

FCIconnect.com

PRODUCT NUMBER	PITCH
VJxx01x500J0G	5.00mm

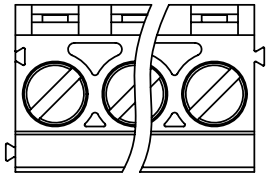

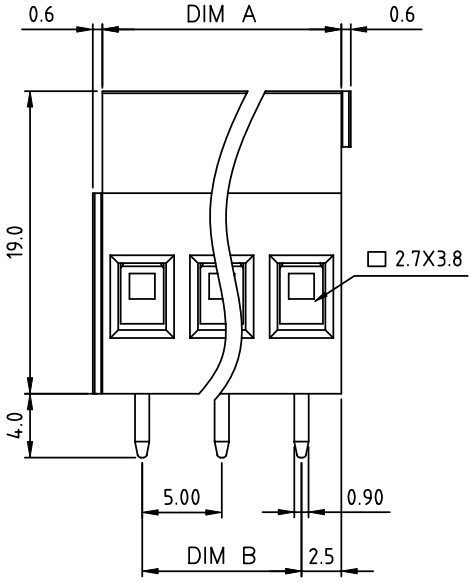

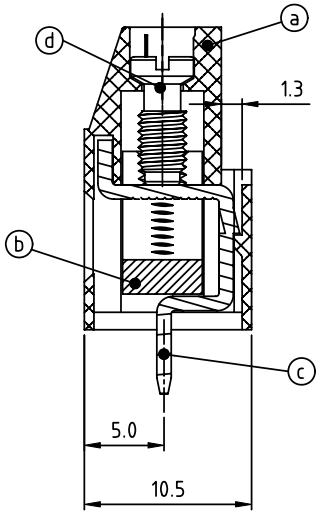

SECTION A-A

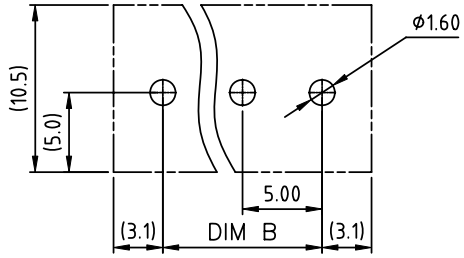

RECOMMENTED P.C.B LAYOUT
TOP VIEW

Material:

- Item ⓐ Terminal housing:Thermoplastic (UL 94V-0)
- Item ⓑ Clamp: Brass Ni plated
- Item ⓒ Solder pin:Brass Tin plated
- Item ⓓ Terminal screw: Steel Zinc plating"-"slot type

Electrical cULus / VDE

- Voltage rating : 300VAC / 450V
- Current rating : 20A / 24A
- Wire range : 0.2-2.5mm²
- Solid wire(AWG) : 12-30
- Stranded wire(AWG) : 12-30
- Torque : 3.5 Lb-In / 0.5 N.m
- Screw: M3
- Wire strip length: 6-7mm
- Withstanding Voltage: 1.6KV / 2.5KV
- Operating temperature: -40°C to +115°C
- Soldering temperature: 260°C±5°C/5 Sec
- Safety Approval: cULus VDE

Dimension A&B

DIM A	N×5.0
DIM B	(N-1)×5.0

N=Number of poles

Poles	DimA&B Tolerance
4P-8P	±0.15
9P-14P	±0.25
15P-20P	±0.35
21P-24P	±0.40

PART NO.: VJ xx 0 1 x 5 00J0 G

Solid block
No. of poles
04 4 poles
05 5 poles
... ...
24 24 poles

Color
0 Black (RAL9005)
2 Red (RAL3001/D)
3 Orange(RAL2011/P)
4 Yellow(RAL1018/A)
5 Green(RAL6018/T)
6 Blue (RAL5015/A)
8 Grey(RAL7035/D)
9 White(RAL1102)
C Green(RAL6018/U)

RoHS compliant
(lead<4%)
In copper Alloy

mat'l. code				surface ASME Y14.5	tolerance ASME Y14.5	projection	product family TERMINAL BLOCK
ltr	ecn no	dr	date	tolerances unless otherwise specified			title
				angles / linear	X.±0.5 / X.X±0.3 / X.XX±0.1	MM	TERMINAL BLOCK RISING CLAMP,180D WIRE INLET,SOLID BLOCK
				X°±1°		scale	
				dr	EVIN ZHONG 040914	FCI	dwg no VJxx01x500J0G — sheet 1 of 1 — size A4
				engr	EVIN ZHONG 040914		
				chr	HANKE FENG 040914		
				appd	SHI JUN 040914		type CUSTOMER Drawing
sheet index	revision	A					
	sheet	1					

Downloaded from Arrow.com.