NOTE:

REFERENCE STANDARD IEC60169-4

I. ELECTRICAL PERFORMANCE -

NOMINAL IMPEDANCE	: 50 Ω
FREQUENCY RANGE	: DC-3.0 GHz
VSWR	: 1.100 MAX.
INSERTION LOSS	: 0.100 dB MAX. (@ 3.0 GHz)
PIM	: -165 dBc MAX. (2x43dBm)
INSULATION RESISTANCE	: 5000 MΩ MIN.
D.W.V	: 2500 VRMS
CONDUCTOR RESISTANCE	: OUTER CONDUCTOR 0.5 mΩ MAX. INNER CONDUCTOR 1.0 mΩ MAX.

II. MECHANICAL PERFORMANCE -

RETENTION	: 7/16: 5.88 N MIN. 4.1/9.5: 4.00 N MIN.
AXIAL FORCE	: 200 N
NUT FORCE	: 10 N-m MIN. TO 12 N-m MAX.(4.1/9.5)
MATING CYCLES	: 500 MIN.

III. MATERIAL AND PLATING -

INNER CONDUCTOR	: SPRING COPPER ALLOY, PLATING = Ag (5µm MIN.)
OUTER CONDUCTOR	: BRASS, PLATING = COPPER-TIN-ZINC (2µm MIN.)
NUT	: BRASS, PLATING = NI (5µm MIN.)
INSULATOR	: PTFE

IV. ENVIRONMENTAL -

TEMP. RANGE	: -40°C TO +85°C
WEATHER STANDARD	: IEC 60068 40/ 85/ 21
THERMAL SHOCK	: MIL-STD 202, METHOD 107, CONDITION B
VIBRATION	: MIL-STD 202, METHOD 204, CONDITION B
SHOCK	: MIL-STD 202, METHOD 213, CONDITION I

V. ROHS COMPLIANT

242278	REVISIONS				
DRAWING NO.	REV	DESCRIPTION	DATE	ECO	APPR
THIRD ANGLE PROJ.	A	RELEASE TO MFG.	11-Sep-13	--	KR/BCG

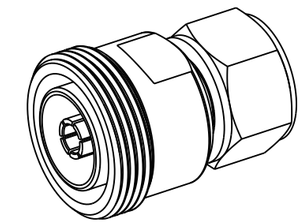

SCALE 1.000

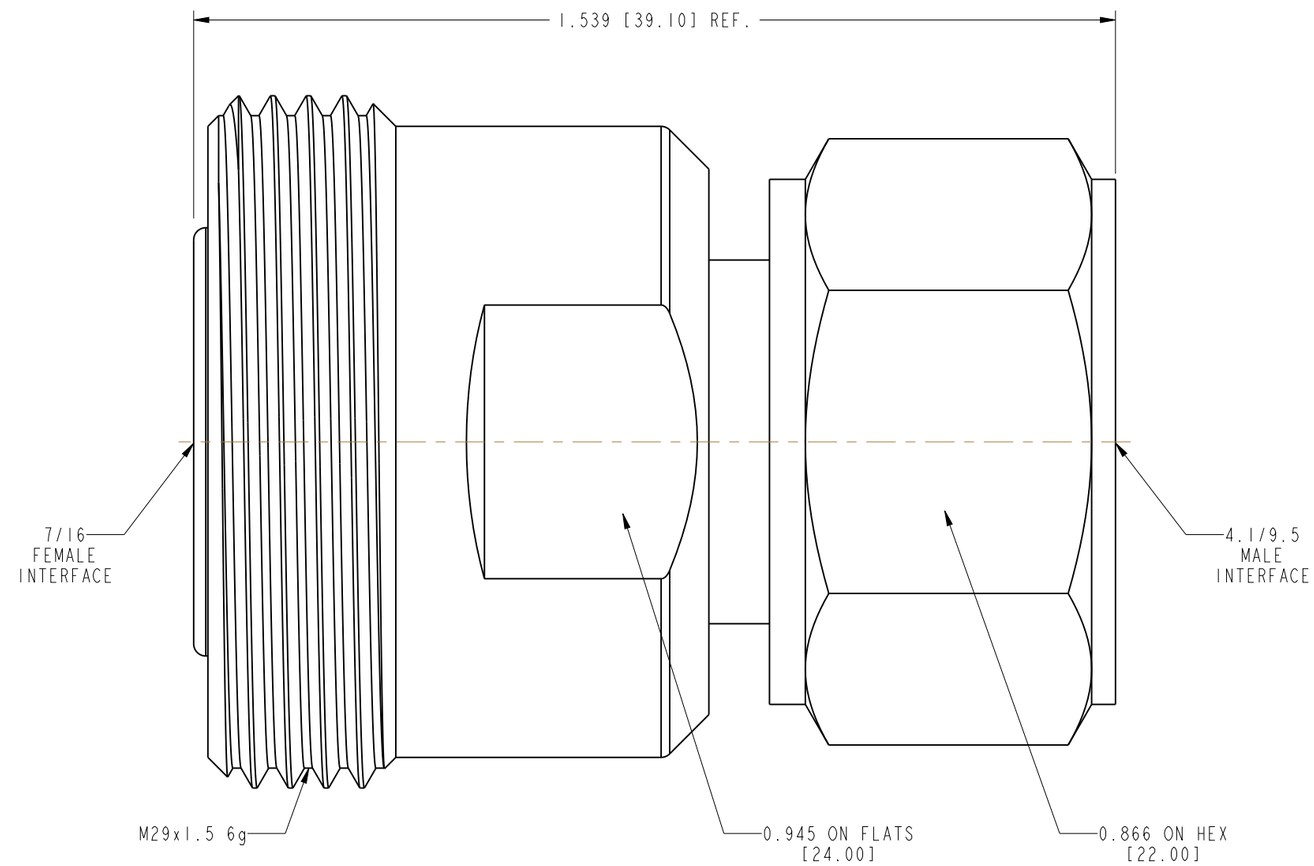

CUSTOMER OUTLINE DRAWING

ALL OTHER SHEETS ARE FOR INTERNAL USE ONLY

UNLESS OTHERWISE SPECIFIED, DIMENSIONS ARE IN INCHES AND TOLERANCES ARE:

2 PLACE DECIMAL	3 PLACE DECIMAL	ANGLES
±.015 (0,381 mm)	±.005 (0,127 mm)	± 1°

NOTICE - These drawings, specifications, or other data (1) are, and remain the property of Amphenol Corp. (2) must be returned upon request; and (3) are confidential and not to be disclosed to any person other than those to whom they are given by Amphenol Corp. The furnishing of these drawings, specifications, or other data by Amphenol Corp., or to any other person to anyone for any purpose is not to be regarded by implication or otherwise in any manner licensing, granting rights or permitting such holder or any other person to manufacture, use or sell any product, process or design, patented or otherwise, that may in any way be related to or disclosed by said drawings, specifications, or other data.

MATERIAL: SEE NOTES	DRAWN: KARTHIK R	DATE: 05-Sep-13	TITLE: 7/16 FEMALE TO 4.1/9.5 MALE ADAPTER
REFERENCE	ENGINEER: KARTHIK R	DATE: 05-Sep-13	
	APPROVED: B.C. GLEISSNER	DATE: 11-Sep-13	
	CAD FILE		

Amphenol Connex

SCALE: 4.0:1	SHEET 1 OF 1		
DWG SIZE: B	DRAWING NO.: 242278		REV: A

Downloaded from Arrow.com.