THL3514

24-channel Constant Current LED Driver with LVDS Interface

DESCRIPTIONS

The THL3514 is an LED driver with 24 channel constant current sink outputs. The constant current values for three output groups are determined by external resistors. The embedded oscillator and PWM controller individually generates 256-step brightness set by the dedicated registers for each channel.
The serial interface of 2-pair LVDS lines (clock and data) features high-level noise tolerance, high-speed, and long-distance transmission.
The LVDS allowing cascaded and multidrop connection offers the maximum flexibility for designers to place and connect LED drivers.
The simple and one-way communication protocol is easily-controlled and requires less CPU resources.

APPLICATIONS

Amusement
LED Backlight
LED Display
Digital Signage
Illumination

FEATURES

< Driver part >
- Constant Current Output: 24 channels
- Output Sink Current: up to 40mA/ch
- Output voltage: up to 40V
- Individual Brightness Control: 256 steps
- Output disable/enable

< Serial interface part >
- 2-pair Serial LVDS Input or 3-wire Serial CMOS Input up to 10Mbps
- Bridge Function Converting 3-wire Serial CMOS Input to 2-pair Serial LVDS Output
- Repeater function of 2-pair Serial LVDS Input / Output with Waveform and Timing Correction
- Device Address Selection up to 62 addresses
- General call to all devices

Protection Circuits
UVLO, Short Circuit Protection, Thermal Shutdown
Supply Voltage: 3.0~5.5V
Package: QFN 48-pin Exposed Pad
Protection Circuits

EU RoHS Compliant

Block Diagram

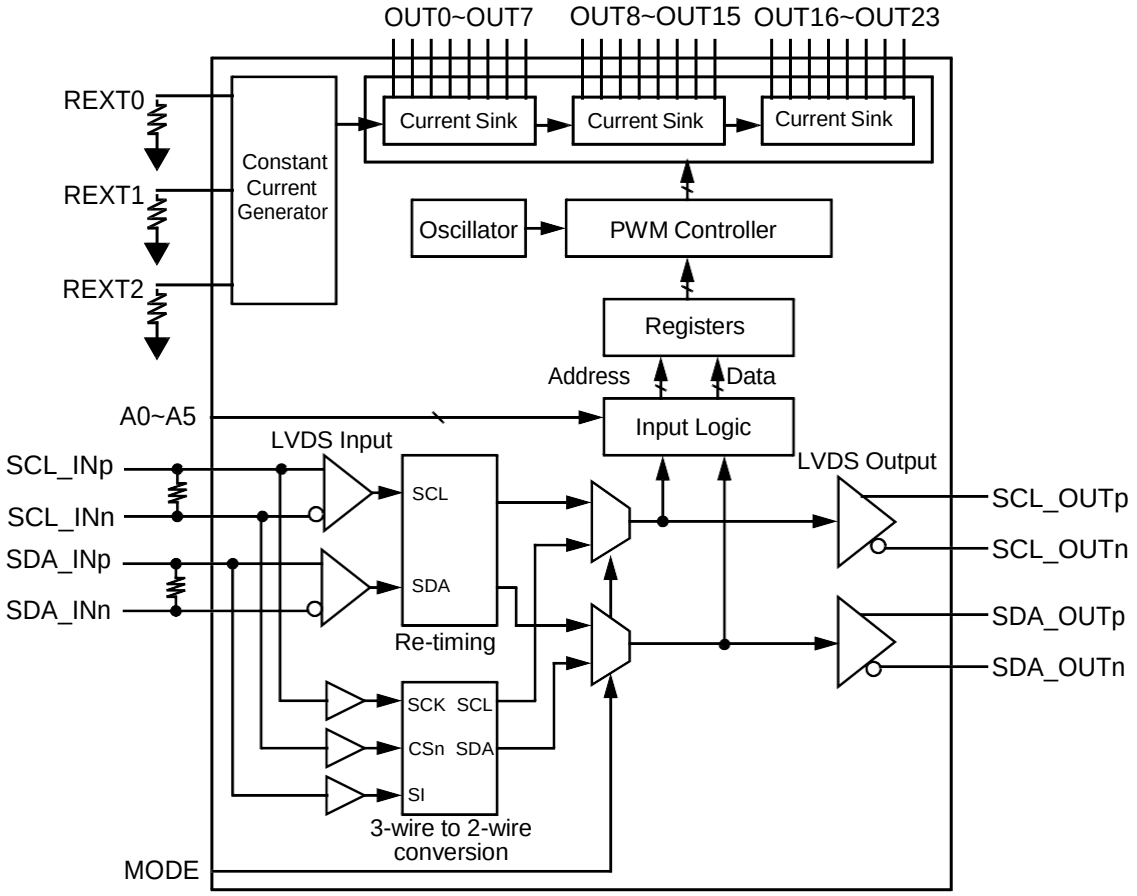

Copyright©2022 THine Electronics, Inc.

Downloaded from Arrow.com.

ABSOLUTE MAXIMUM RATINGS

Parameter	Condition	Min	Typ	Max	Unit
VDD Supply Voltage		-0.4		6.0	V
Digital Input Voltage *Note 1		-0.5		6.0	V
LED Driver Output Voltage				40	V
Storage Temperature		-55		150	°C
Junction Temperature, Tj				150	°C

*Note1: As for the A0 pin, the maximum value is VDD+0.5V. While power supply is not applied, the voltage on the A0 pin must be lower than 0.5V.

RECOMMENDED OPERATING CONDITIONS

Parameter	Condition	Min	Typ	Max	Unit
VDD Supply Voltage		3.0		5.5	V
LED Driver Output Voltage				35	V
LED Driver Output Current *Note2				40	mA/ch
Operating Ambient Temperature, Ta		-40		85	°C

*Note2: Since overshoot of current waveform may occur depending on usage conditions, the LEDs with more than 80mA pulse forward current as absolute maximum ratings are recommended

ELECTRICAL CHARACTERISTICS (VDD=5V, Ta=25 ℃ ,unless otherwise noted.)

Parameter	Condition	Min	Typ	Max	Unit
VDD Supply Current *1	VDD=3.3V, Iout=20mA(REXT=2.4kΩ) without LVDS output termination resistors		11		mA
	VDD=3.3V, Iout=20mA(REXT=2.4kΩ) with LVDS output termination resistors 100Ω		18		mA
	VDD=5.0V, Iout=20mA(REXT=2.4kΩ) without LVDS output termination resistors		13		mA
	VDD=5.0V, Iout=20mA(REXT=2.4kΩ) with LVDS output termination resistors 100Ω		21		mA
	VDD=5.0V, Iout=20mA(REXT=2.4kΩ) with LVDS output termination resistors 100Ω			28	mA
Oscillator Frequency(fosc)			900		KHz
UVLO Threshold Voltage (VDD Rising)			2.5		V
UVLO Hysteresis			0.1		V
Constant Current Mismatch Between Channels				±3	%
Constant Current Mismatch Between Devices				±6	%
LED Driver Output Leakage Current				±1	μA
Digital Input, High Level Voltage (VIH)		0.7VDD			V
Digital Input, Low Level Voltage (VIL)				0.3VDD	V
Digital Input, Hysteresis		0.05VDD			V
Digital Input, Leakage Current				±10	μA
LVDS Input, Differential Voltage (VID)	VIC=1.25V	±100			mV
LVDS Input, Leakage Current				±30	μA
LVDS Output, Differential Voltage (VOD)	VDD=3.0V	240			mV
	VDD=3.3V		350		mV
	VDD=5.0V		420		mV
	VDD=5.5V			480	mV
LVDS Output, Common Mode Voltage (VOC)		1.1	1.25	1.4	V

Copyright©2022 THine Electronics, Inc.

Downloaded from Arrow.com.

3-wire Serial CMOS Level Input (MODE=High)

Symbol	Parameter	Condition	Min	Typ	Max	Unit
fSCK	SCK Frequency				10	MHz
tCH	SCK High Time		40			ns
tCL	SCK Low Time		40			ns
tDVCH	SI Setup Time		10			ns
tCHDX	SI Hold Time		10			ns
tCHSL	CSn Not Active Hold Time		40			ns
tSLCH	CSn Active Setup Time		40			ns
tCHSH	CSn Active Hold Time		40			ns
tSHCH	CSn Not Active Setup Time		40			ns
tSHSL	CSn Not Active Time		200			ns

2-pair Serial LVDS Output

Symbol	Parameter	Condition	Min	Typ	Max	Unit
tr, tf	SCL, SDA Transition Time	*2			10	ns
t STAH	Header Condition Hold Time		6	10	20	ns
tDSU	SDA Setup Time		6	10	20	ns
tDHO	SCL Falling Edge Hold Time		5			ns
tPWE	End Pulse Width		25	40	70	ns
tPD	SCL Propagation Delay				30	ns

2-pair Serial LVDS Input (MODE=Low)

Symbol	Parameter	Condition	Min	Typ	Max	Unit
fSCL	SCL Frequency				10	MHz
tDAH	SCL High Time		25			ns
tDAL	SCL Low Time		25			ns
tSTAH	Header Condition Hold Time		4			ns
tDSU	SDA Setup Time		4			ns
tDHO	SCL Falling Edge Hold Time		3			ns

*1. In cascading connection, termination resistors are necessary for LVDS outputs. In this case, 2.4mA to 4.8mA current flows at each resistor depending on the power supply voltage. Therefore, the current consumption is larger than the case without the termination resistors.

< With termination resistors > < Without termination resistors >

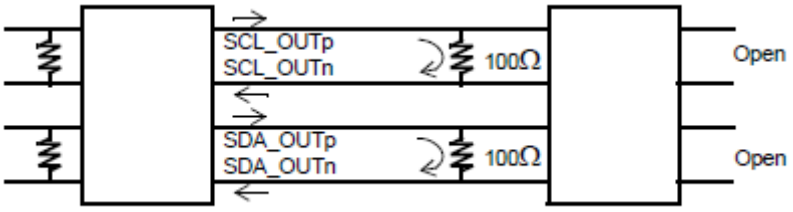

*2. SCL, SDA Transition Time Measurement Condition

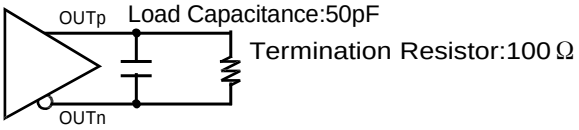

Downloaded from Arrow.com.

LVDS Spec

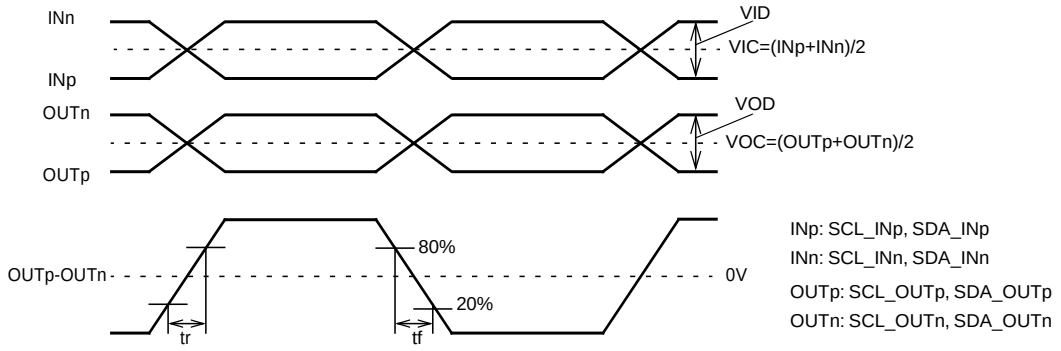

Timing Diagram

3-wire Serial Input/2-pair Serial LVDS Output Timing

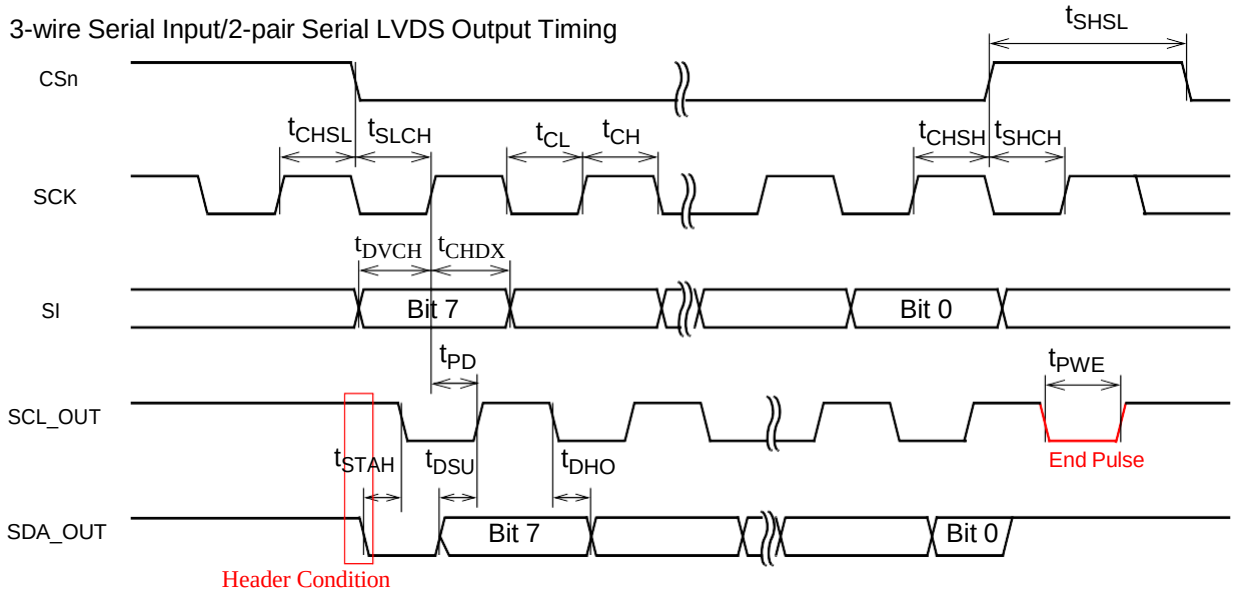

2-pair Serial LVDS Input/Output Timing

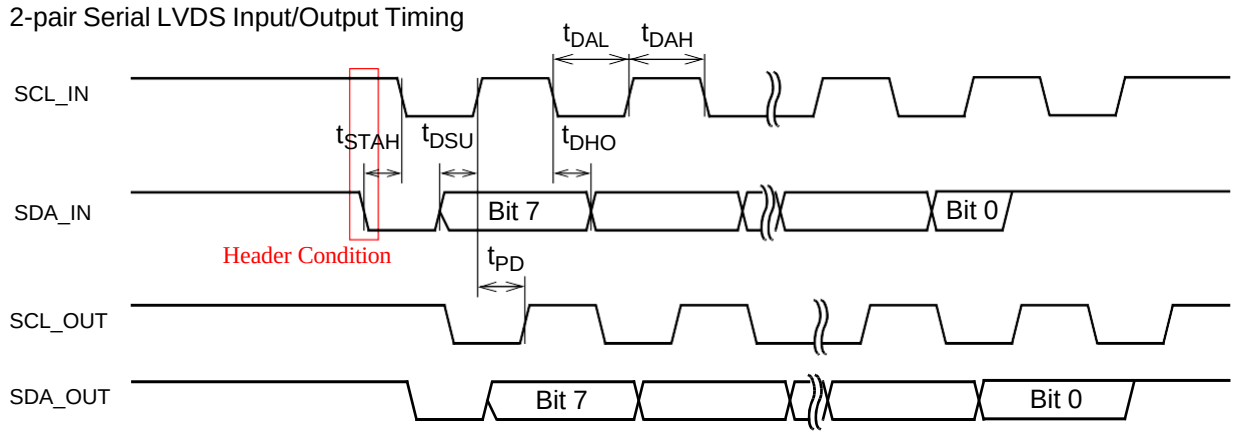

* Abbreviation

This document refers to the differential signals in unipolar shorthand; for example, SCL_IN, SDA_IN, SCL_OUT, and SDA_OUT mean (SCL_INp - SCL_INn), (SDA_INp - SDA_INn), (SCL_OUTp - SCL_OUTn), and (SDA_OUTp - SDA_OUTn) respectively.

* A falling transition of the SDA_IN while the SCL_IN is high is defined as ”Header Condition“. Please refer to the section “2-pair Serial LVDS Input” for details.

Downloaded from Arrow.com.

PIN CONFIGURATIONS

(Top View)

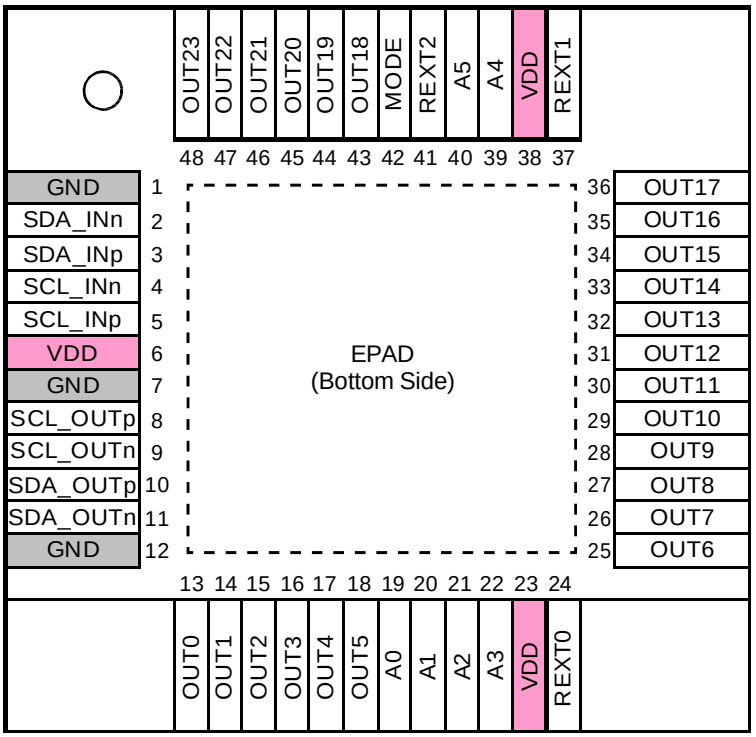

* The exposed pad is connected to GND inside the device. The exposed pad should be soldered to GND on the PCB.

PIN DESCRIPTION

Pin Name	Type	Description
MODE	Digital Input	Serial Interface Input Mode Select Low: 2-pair Serial LVDS Input High: 3-wire Serial CMOS Input
SCL_INp(SCK)	LVDS Input/ Digital Input	MODE=Low: 2-pair Serial LVDS Clock Input - Positive MODE=High: 3-wire Serial Clock Input (SCK)
SCL_INn(CSn)	LVDS Input/ Digital Input	MODE=Low: 2-pair Serial LVDS Clock Input - Negative MODE=High: 3-wire Serial Chip Select Input (CSn)
SDA_INp(SI)	LVDS Input/ Digital Input	MODE=Low: 2-pair Serial LVDS Data Input - Positive MODE=High: 3-wire Serial Data Input (SI)
SDA_INn	LVDS Input/ Digital Input	MODE=Low: 2-pair Serial LVDS Data Input - Negative MODE=High: Reserved (Connect to Low)
SCL_OUTp	LVDS Output	2-pair Serial LVDS Clock Output - Positive
SCL_OUTn	LVDS Output	2-pair Serial LVDS Clock Output - Negative
SDA_OUTp	LVDS Output	2-pair Serial LVDS Data Output - Positive
SDA_OUTn	LVDS Output	2-pair Serial LVDS Data Output - Negative
OUT0-OUT23	Constant Current Output	LED Driver Output Channel 0 - 23
REXT0	Analog Output	Resistor connection for the constant current outputs (OUT0-OUT7)
REXT1	Analog Output	Resistor connection for the constant current outputs (OUT8-OUT15)
REXT2	Analog Output	Resistor connection for the constant current outputs (OUT16-OUT23)
A0-A5	Digital Input	Device address input Bit0 - 5
VDD	—	Power supply
GND	—	Ground
EPAD	—	Ground

Copyright©2022 THine Electronics, Inc.

Downloaded from Arrow.com.

REGISTER NOTATION

Address is noted in hex with the prefix “R“.	For example, R00 is a register of address 00.
Bit location is noted by “[]“.	For example, R00[5:0] is bit 5 down to bit 0 of address 00.
Register value is noted in binary with the suffix “b“.	For example, R00[5:0]=000000b
Register value is noted in decimal without a suffix.	For example, R04[7:0]=160
Register value is noted in hex with the suffix “h“.	For example, R04=A0h

REGISTER MAP

Address	Default	Function	Description
R00[7]	0	PWM Phase Control Mode	0: Normal Mode 1: Group Control Mode
R00[6]	0	LED Output Enable	0: Output Disable 1: Output Enable
R00[5:0]	-	-	internal fixation
R01[7:0]	00h	Individual Brightness - OUT0	Individual Brightness=Value/256
R02[7:0]	00h	Individual Brightness - OUT1	
R03[7:0]	00h	Individual Brightness - OUT2	
R04[7:0]	00h	Individual Brightness - OUT3	
R05[7:0]	00h	Individual Brightness - OUT4	
R06[7:0]	00h	Individual Brightness - OUT5	
R07[7:0]	00h	Individual Brightness - OUT6	
R08[7:0]	00h	Individual Brightness - OUT7	
R09[7:0]	00h	Individual Brightness - OUT8	
R0A[7:0]	00h	Individual Brightness - OUT9	
R0B[7:0]	00h	Individual Brightness - OUT10	
R0C[7:0]	00h	Individual Brightness - OUT11	
R0D[7:0]	00h	Individual Brightness - OUT12	
R0E[7:0]	00h	Individual Brightness - OUT13	
R0F[7:0]	00h	Individual Brightness - OUT14	
R10[7:0]	00h	Individual Brightness - OUT15	
R11[7:0]	00h	Individual Brightness - OUT16	
R12[7:0]	00h	Individual Brightness - OUT17	
R13[7:0]	00h	Individual Brightness - OUT18	
R14[7:0]	00h	Individual Brightness - OUT19	
R15[7:0]	00h	Individual Brightness - OUT20	
R16[7:0]	00h	Individual Brightness - OUT21	
R17[7:0]	00h	Individual Brightness - OUT22	
R18[7:0]	00h	Individual Brightness - OUT23	

Copyright©2022 THine Electronics, Inc.

Downloaded from Arrow.com.

FUNCTIONAL DESCRIPTION

External reference resistor

The constant current value of LED driver output channels are determined by the resistors connected between REXT0, REXT1, REXT2 and GND. The external resistor value is calculated by the following equation.

$$\text{REXT}[\text{k}\Omega] = \frac{0.6\,[\text{V}]}{\text{Iout}\,[\text{mA}]} \times 80 \qquad \text{(Typical Value at Iout=20mA)}$$

For example, when Iout=20mA, REXT=0.6/20 x 80=2.4[kΩ]

Writing to registers

The device includes 25-byte registers (R00-R18) for setting. Writing to registers is executed through the serial interface and the value is maintained as long as power is applied. The register value can not be read.
Writing to registers should be invoked after the power supply (VDD) of all the devices in cascading and multidrop connection gets stable above 3.0V.
Then after power-up, if using 2-pair serial LVDS input, initialization of 2-pair serial LVDS input must be done before writing to registers. However, in case all the registers are continuously rewritten, in other words repeatedly refreshed, the initialization of 2-pair serial LVDS input is not necessary after power-up and instantaneous interruption.
Please refer to the section “Initialization of 2-pair Serial LVDS Input” for details.

UVLO

The device has an internal UVLO (Under-Voltage Locked-Out) circuit to prevent the device from malfunction at low supply voltage. Until power supply (VDD) has reached 2.5V (typical value), the UVLO holds the internal logic circuit in a reset condition, and keeps the LED driver outputs and LVDS outputs in Hi-Z state. The UVLO circuit has hysteresis. If power supply falls below 2.4V (typical value), the device gets into the above UVLO state in which the internal logic circuit is reset and the registers are reset to default value.

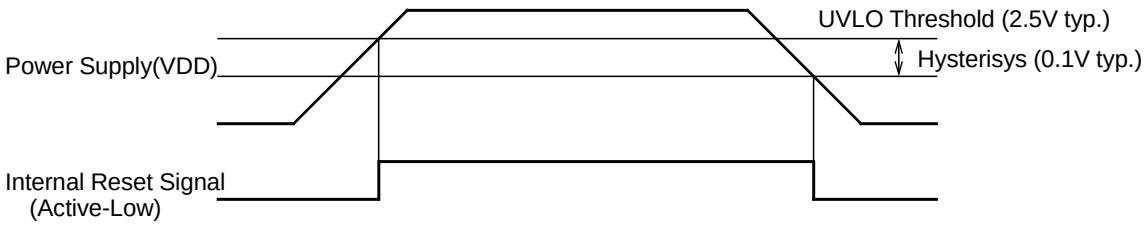

Short Circuit Protection

The device includes short circuit protection circuits for each pin of the external reference resistors, REXT0-REXT2 to prevent the LED driver outputs from driving excessive current. If LED driver outputs turn on with the REXT0-REXT2 pin shorted to such as GND, overcurrent flowing in output transistors may causes permanent damage to the device.
The short circuit protection is a function to shutdown outputs immediately when the device detects short circuit condition on REXT0-REXT2 pin. If short circuit condition is resolved, normal operation automatically resumes.
However, this function can not always prevent breakdown or damage to the device depending on usage situation and duration of abnormality.

Thermal Shutdown

The device includes thermal shutdown circuit to prevent damages caused by excessive heat. If the junction temperature exceeds the absolute maximum rating (Tj=150°C), the thermal shutdown circuit turn off all LED driver outputs. The thermal shutdown circuits has hysteresis. If Tj falls enough, normal operation automatically resumes.
However, this function can not always prevent breakdown or damage to the device depending on usage situation and duration of abnormality.

Copyright©2022 THine Electronics, Inc.

Downloaded from Arrow.com.

Serial Communication Protocol

2-pair serial LVDS input or 3-wire serial CMOS level input is selected as a serial interface for register setting by the MODE pin. The 2-pair serial LVDS input and 3-wire serial CMOS level input share input pins (SCL_INp/SCL_INn, SDA_INp/SDA_INn) which are used as 2-pair serial LVDS input when the MODE pin is set to low, and used as 3-wire serial CMOS level input when the MODE pin is set to high.

- The serial interface is clock synchronous and used only for writing to registers (one-way communication).
- The data length is 8-bit in MSB first bit order. As for how to recognize the first bit, please refer to the section “2-pair serial LVDS input” and “3-wire serial CMOS level input”.
- The first 8 bits that includes the first bit is defined as “1st byte” and the next 8 bits as “2nd byte” and so on.
- “1st Byte” is assigned to the device address. If device address is set to 00h, all the devices are selected to be written except the device which has a device address 00111111 by the A5-A0 pins.
- “2nd Byte” is assigned to the register address.
- The bytes after “3rd Byte” is assigned to register values to write. The register address is incremented every time 8-bit register value is written. For example, the value of “3rd Byte” is written to the register at the address indicated in “2nd byte“, and the value of “4th byte” is written to the register at the address (“2nd byte“+1).
- Don’t write except the registers R00-R18

< Serial Data >

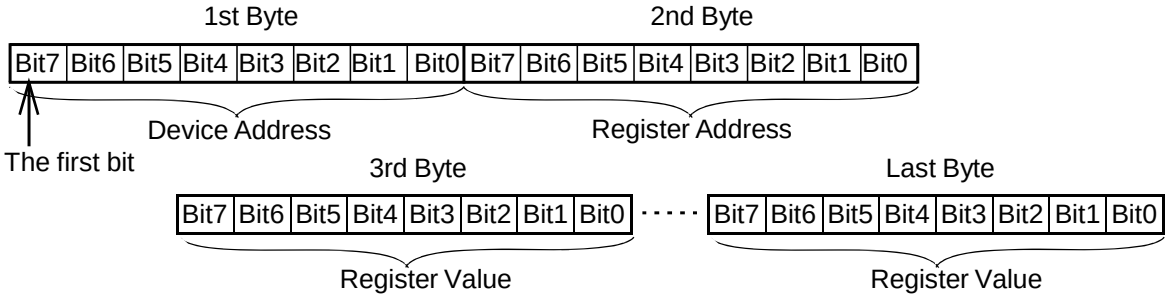

Device Address Setting

The lower 6 bits out of 8-bit serial interface device address are set by the A0-A5 pin. The higher 2 bits are fixed at 00.
For example,
in case A5=Low, A4=Low, A3=Low, A2=Low, A1=Low, A0=High,
the device address is set to 00000001 (01h).

- If the A0-A5 pins are all set to high, the register of the device can not be written. Please set all the A0-A5 pins to high in order to use only 2-pair to 2-pair repeater function or 3-wire to 2-pair bridge function without using LED driver outputs.
- Since the device address 00000000 (00h) is the one to be used for writing to all devices, basically don’t use it.
- Please set device addresses within the range from 00000001 (01h) to 00111110 (3Eh) in normal use.

Copyright©2022 THine Electronics, Inc.

Downloaded from Arrow.com.

Serial Interface Connection

THL3514 is protocol compatible with LED drivers series of open drain outputs and constant current outputs so that can be mixed in cascade and multidrop connection scheme .(Please note that multiple LVDS outputs can not be connected to each other.)

*LED driver series of open drain outputs and constant current outputs are referred to collectively as THL35XX hereafter.

Cascade Connection by 2-pair serial LVDS

The THL35XX can convert 3-wire serial output from the host such as micro-controller or CPU to 2-pair serial LVDS, which is connected to the 2-pair serial LVDS input of a following device in a point-to-point topology. As for the maximum number of devices to be cascaded, please refer to an application note.

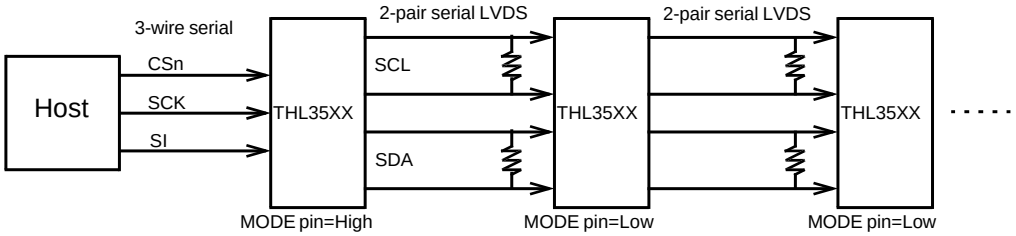

Multidrop Connection by 2-pair serial LVDS

The THL35XX can convert 3-wire serial output from the host such as micro-controller or CPU to 2-pair serial LVDS, which is connected to the 2-pair serial LVDS input of following multiple devices in a multidrop topology. As for the maximum number of devices to be multidropped, please refer to an application note.

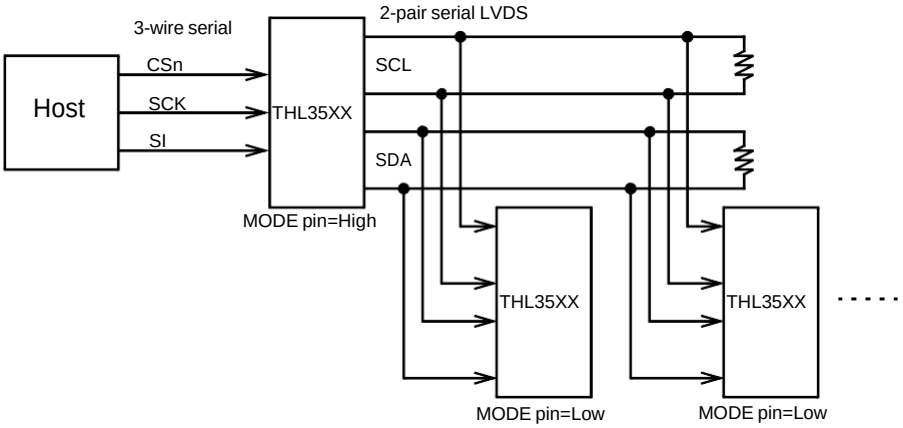

Multidrop Connection by 3-wire serial

3-wire serial output from the host such as micro-controller or CPU is connected to following multiple devices in a multidrop topology.

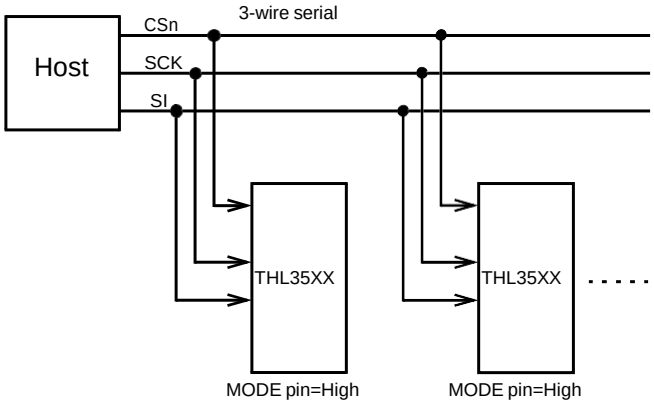

Copyright©2022 THine Electronics, Inc.

Downloaded from Arrow.com.

3-wire Serial CMOS Level Input

When the MODE pin is set to high, the serial interface for writing to registers becomes 3-wire serial CMOS level input. The chip select (CSn), serial clock (SCK), serial data (SI) of 3-wire serial CMOS level input are input to the SCL_INn pin, the SCL_INp pin, the SDA_IN pin respectively. The SDA_INn must be tied to low.

- While the CSn stays low, the data input SI is latched by rising edges of the clock input SCK.
- The data latched by the first clock rising edge after the CSn falls is assigned the "first bit".
- The "Last Byte" is written to a register when the CSn rises after Bit0 (in other words, "Last Byte" will not be written to a register until the CSn rises).
- If the CSn rises in the middle of a byte, the byte is not written to a register, then the communication resumes from "1st Byte" when the CSn falls next.

< 3-wire Serial CMOS Level Input >

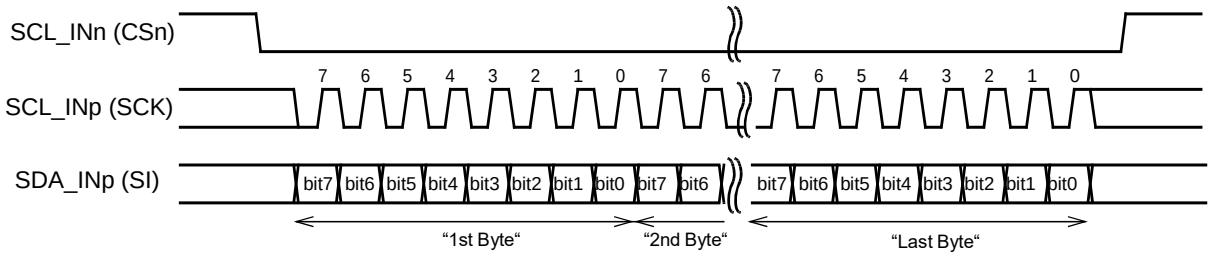

2-pair serial LVDS

When the MODE pin is set to low, the serial interface for writing to registers becomes 2-pair serial LVDS input (SCL_INp/SCL_INn, SDA_INp/SDA_INn).

- The data input SDA_IN is latched by rising edges of the clock input SCL_IN.
- A falling transition of the SDA_IN while the SCL_IN is high is defined as "Header Condition", and the data latched by the first clock rising edge after the "Header Condition" is assigned the "first bit". Except "Header Condition", the transitions of the data input SDA_IN are allowed while the clock input SCL_IN is low.
- The "Last Byte" is written to a register at the reception of an active-low pulse "End Pulse" (actually, "Last Byte" is written to a register at the rising edge of the "End Pulse"). When the "End Pulse" rises, the data output SDA_OUT must be high.
- If the "Header Condition" is received in the middle of a byte, the byte is not written to a register, then the communication resumes from "1st Byte".

< 2-pair serial LVDS input >

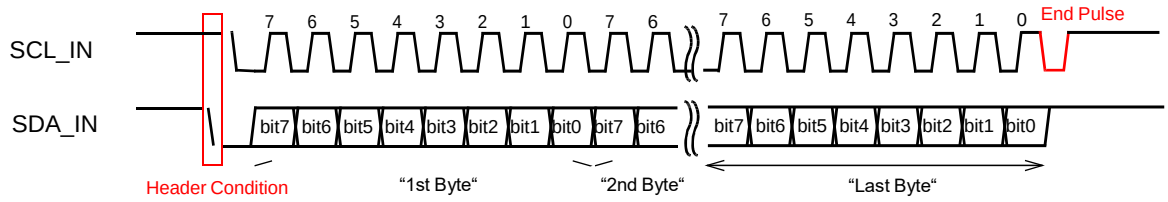

* The 3-wire to 2-pair bridge function can convert 3-wire serial output from the host such as micro-controller or CPU to 2-pair serial LVDS. Please refer to the section "3-wire to 2-pair bridge function" for details.

Downloaded from Arrow.com.

3-wire to 2-pair bridge function

When the MODE pin is set to high, the serial interface for writing to registers becomes 3-wire serial CMOS level input (CSn, CK, SI), which is converted to 2-wire serial and transferred to the LVDS output pins.

- While the CSn is active low, the data input SI is latched and transferred to the LVDS output SDA_OUT on the rising edges of the clock input SCK. There is about 10ns setup time between the clock output SCL_OUT and the data output SDA_OUT.
- When the CSn falls, “Header Condition” is generated on 2-pair LVDS output.
- After the CSn rises, an active-low pulse "End Pulse” (the pulse width: 40ns typ) is added on the clock output SCL_OUT.
- When the CSn rises, the data output SDA_OUT is forced high. In the result, the low to high transition of the clock output SCL_OUT "End Pulse” occurs while the data output SDA_OUT is high

< 3-wire to 2-pair bridge >

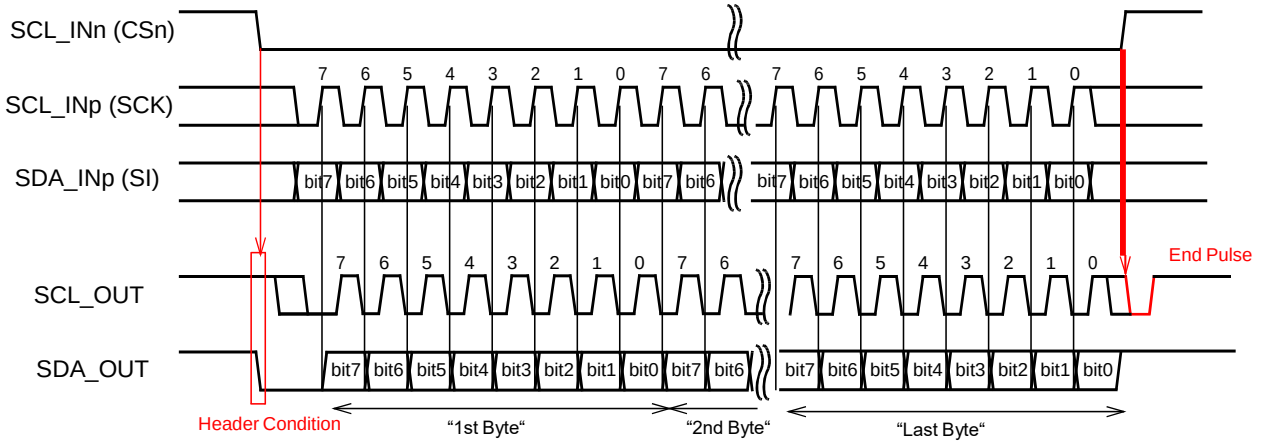

2-pair to 2-pair repeater function

When the MODE pin is set to low, the serial interface for writing to registers becomes 2-pair serial LVDS input (SCL_INp/SCL_INn, SDA_INp/SDA_INn). The timing between the clock and the data is compensated and then they are transferred to the LVDS output pins.

- The data input SDA_IN is latched and transferred to the LVDS output SDA_OUT on the rising edges of the clock input SCL_IN. There is about 10ns setup time between the clock output SCL_OUT and the data output SDA_OUT.
- The “Header Condition” is regenerated and transferred to the output.

< 2-pair to 2-pair repeater function >

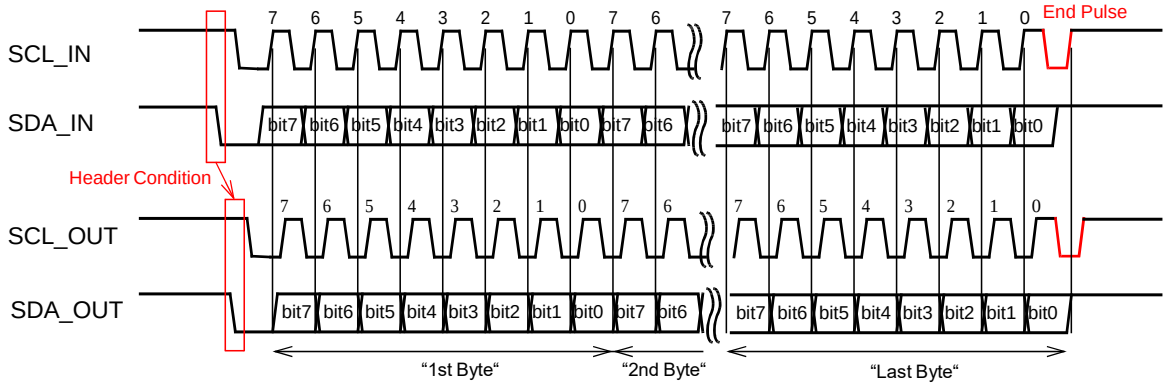

Downloaded from Arrow.com.

Initialization of 2-pair Serial LVDS Input

After power-up, if using 2-pair serial LVDS input, initialization of 2-pair serial LVDS input must be done before writing to registers. Without the initialization of 2-pair serial LVDS input, the first writing to registers (“1st Byte”-”Last Byte”) may possibly fail. However, the initialization of 2-pair serial LVDS input is not necessary in case failure in the first writing to registers can be allowed; for example, in case all the registers (R00-R18) are continuously rewritten, in other words repeatedly refreshed.

In order to initialize 2-pair serial LVDS input, please input active-low pulse (pulse width: 200ns min.) of the CSn into 3-wire serial CMOS level input of the first device which converts 3-wire to 2-pair. In consequence, the 2-pair serial LVDS input of all the following devices are initialized. In cascading connection, it takes the propagation delay of all stages in cascaded chain to finish the initialization of 2-pair serial LVDS input.

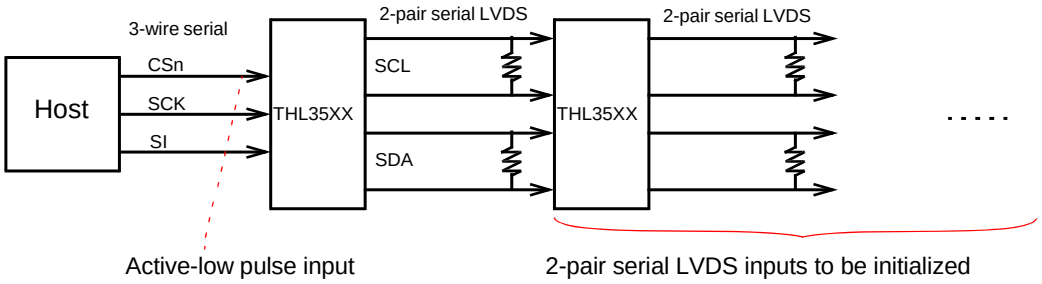

< Initialization of 2-pair Serial LVDS Input >

Initialization Pattern Example 1

Input active-low pulse input to the CSn

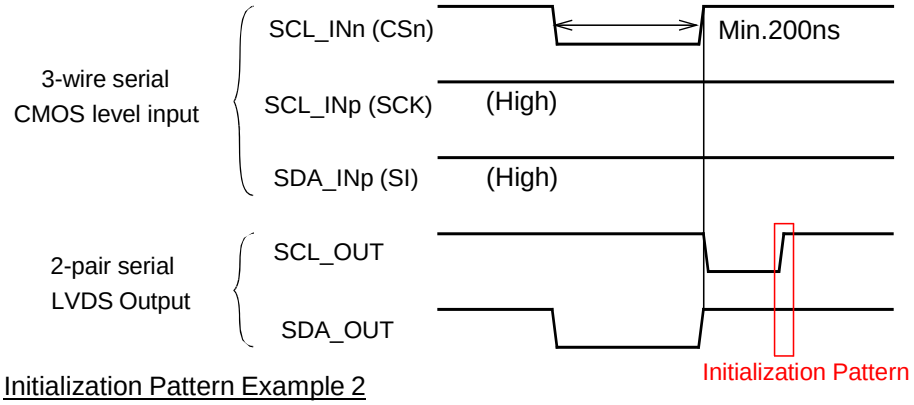

Initialization Pattern Example 2

Input 1st Byte (Device Address)=FFh

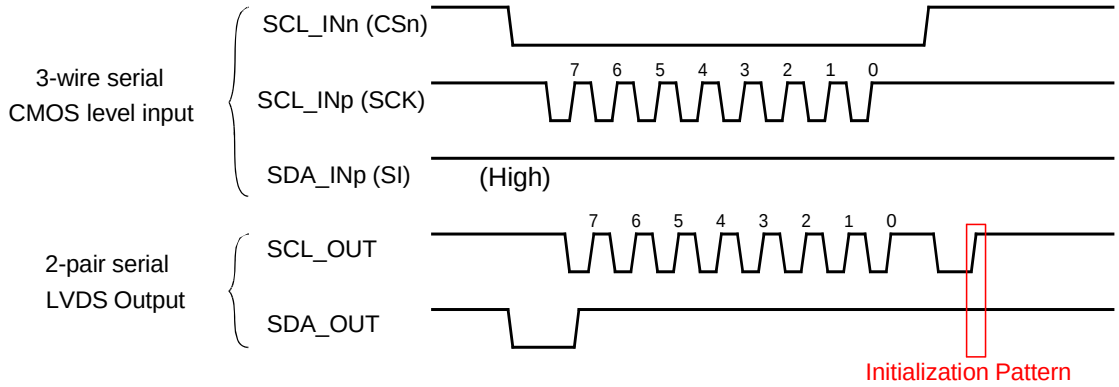

Copyright©2022 THine Electronics, Inc.

Downloaded from Arrow.com.

Individual Brightness Control

The Brightness for each LED output channel (OUT0-OUT23) are individually programmable in 256 steps by the register configuration (R01-R15). The individual Brightness is controlled by PWM duty cycle.
The ratio of ON time for the constant current outputs is expressed in the following equation.

ON time ratio = Individual Brightness Control Register Value / 256

The bigger setting value results in the larger ON time ratio, therefore higher brightness. When the register value is 0, the output current sink is held OFF, therefore the LED turns off.

< Individual Brightness Control >

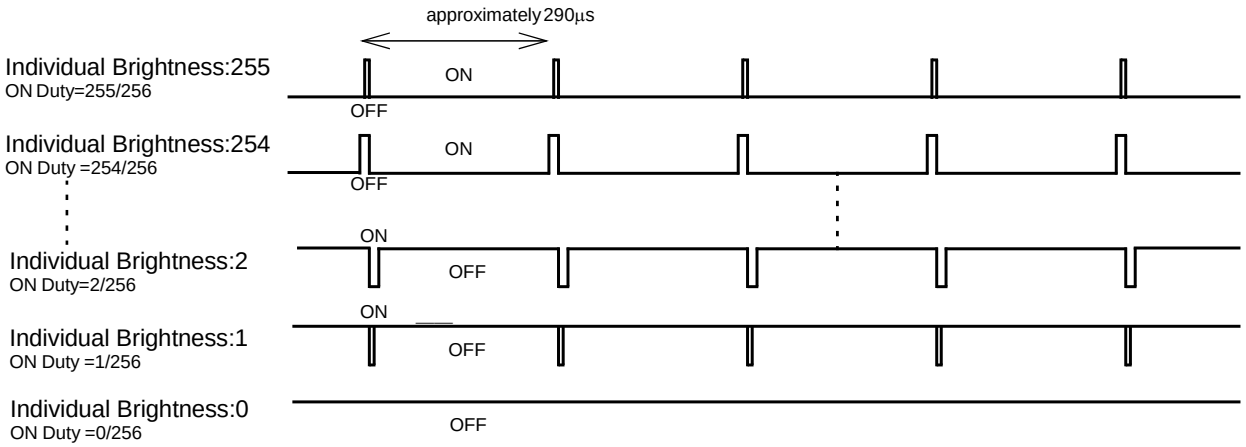

PWM Phase Control Mode

The PWM pulse start position of each channel is controlled in different phases to reduce switching noise.
The phase control mode is selectable in 2 ways by the register configuration (R00[7]).
In normal mode (R00[7]=0), the PWM pulse start positions of all channels are different from each other.
In group control mode (R00[7]=1), the PWM pulse start positions of 2 or 3 channel groups are different from each other.

< PWM Phase Control Mode >

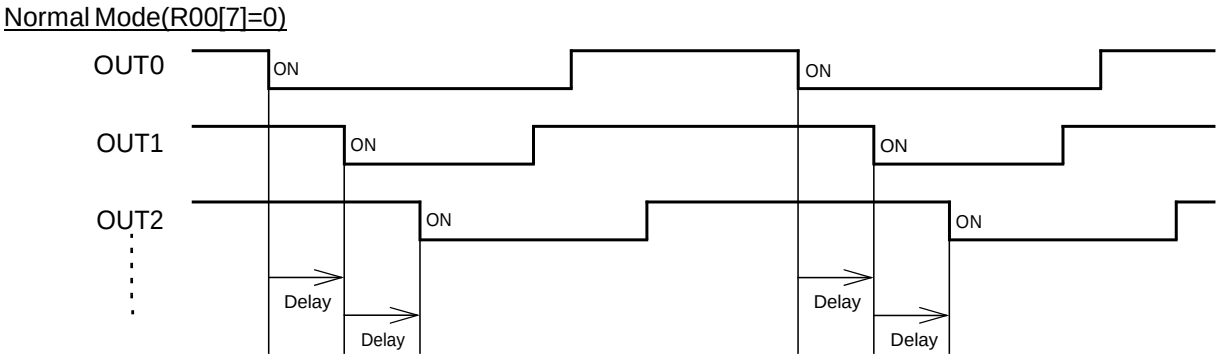

Downloaded from Arrow.com.

< PWM Phase Control Mode >

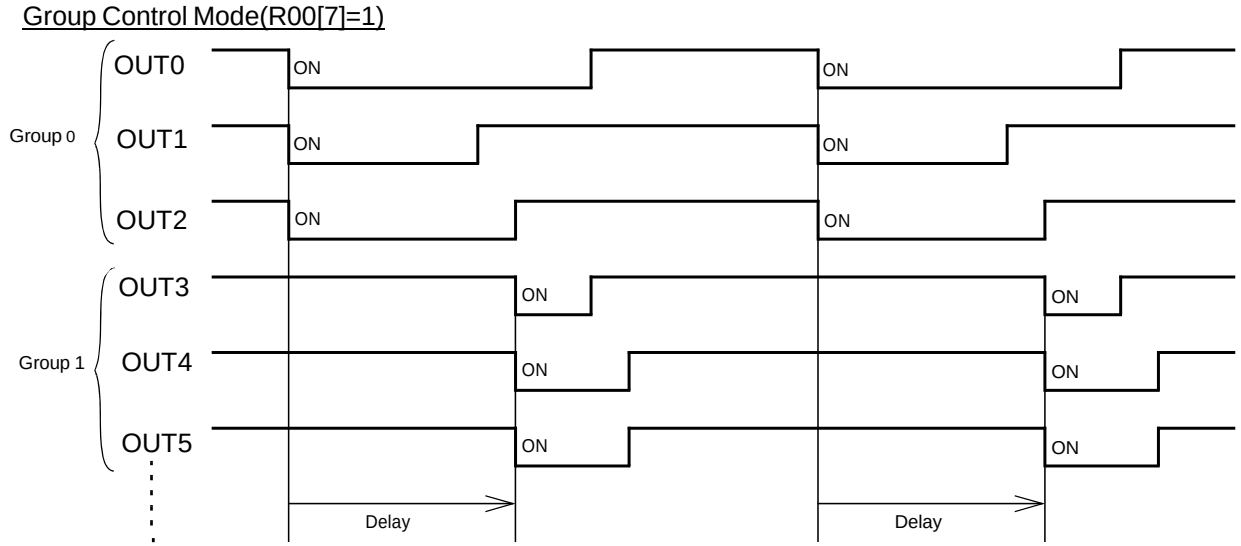

When multiple LED output channels need to be connected in parallel to drive, the PWM phase control mode must be set to group control mode (R00[7]=1), and the channels in the same group must be connected in parallel to drive.

< Grouping of Group Control Mode >

Group	Output Channel
Group0	OUT0, OUT1, OUT2
Group1	OUT3, OUT4, OUT5
Group2	OUT6, OUT7, OUT8
Group3	OUT9, OUT10, OUT11
Group4	OUT12, OUT13, OUT14
Group5	OUT15, OUT16, OUT17
Group6	OUT18, OUT19, OUT20
Group7	OUT21, OUT22, OUT23

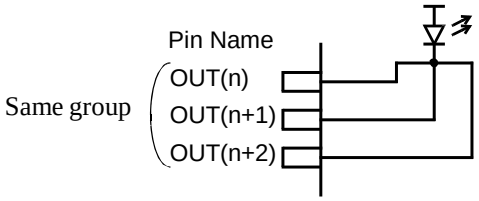

LED Driver Output Enable

All of the LED driver outputs can be disabled by register configuration (R00[6]). When disabled (R00[6]=0), all of the LED driver outputs go into OFF (Hi-Z) state, LEDs turn off.

Copyright©2022 THine Electronics, Inc.

Downloaded from Arrow.com.

Package Dimensions

QFN 48-pin

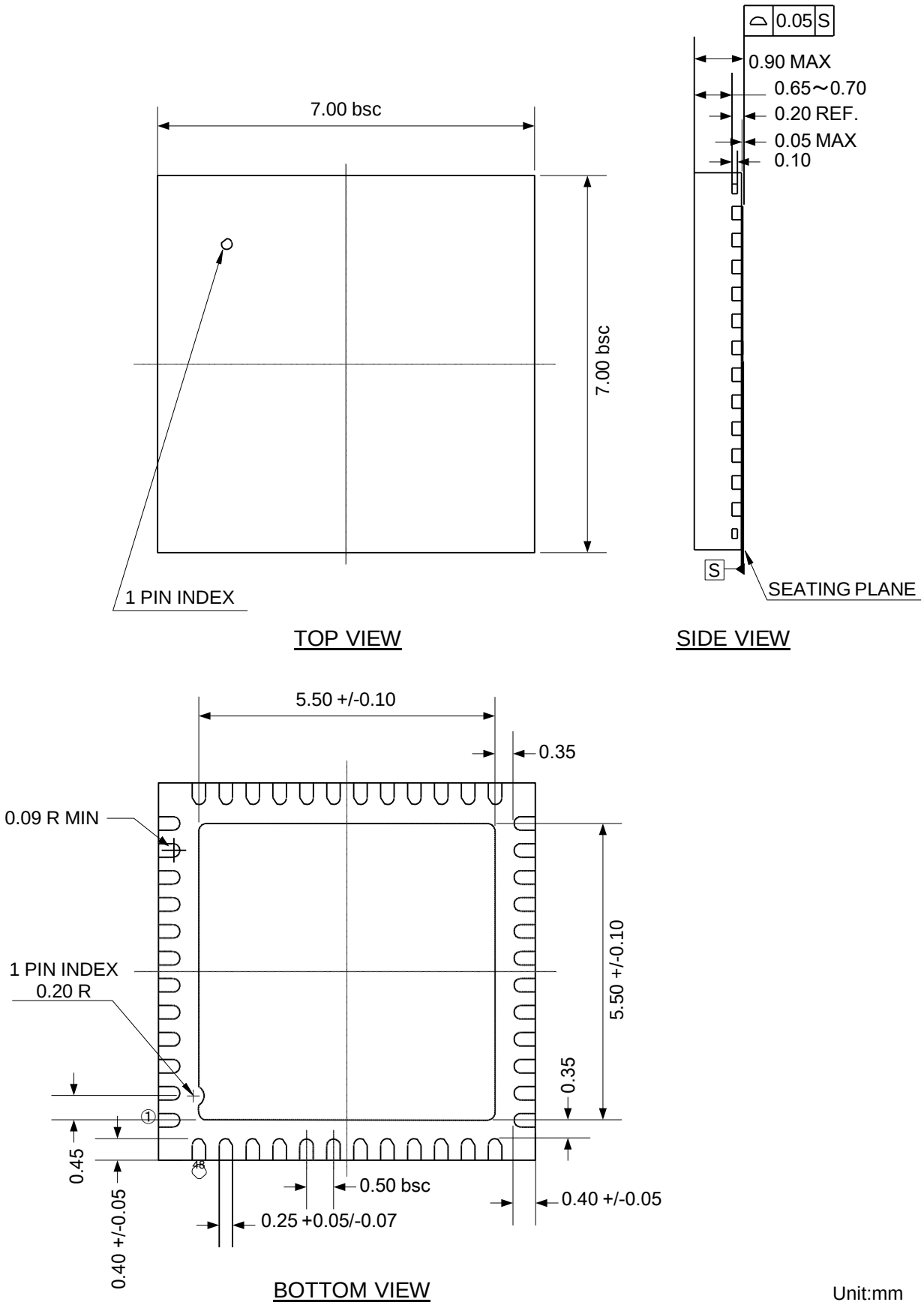

Downloaded from Arrow.com.

Notices and Requests

1. The product specifications described in this material are subject to change without prior notice.

2. The circuit diagrams described in this material are examples of the application which may not always apply to the customer's design. THine Electronics, Inc. (“THine”) is not responsible for possible errors and omissions in this material. Please note even if errors or omissions should be found in this material, THine may not be able to correct them immediately.

3. This material contains THine’s copyright, know-how or other proprietary. Copying or disclosing to third parties the contents of this material without THine’s prior permission is prohibited.

4. Note that even if infringement of any third party's industrial ownership should occur by using this product, THine will be exempted from the responsibility unless it directly relates to the production process or functions of the product.

5. Product Application

5.1 Application of this product is intended for and limited to the following applications: audio-video device, office automation device, communication device, consumer electronics, smartphone, feature phone, and amusement machine device. This product must not be used for applications that require extremely high-reliability/safety such as aerospace device, traffic device, transportation device, nuclear power control device, combustion chamber device, medical device related to critical care, or any kind of safety device.

5.2 This product is not intended to be used as an automotive part, unless the product is specified as a product conforming to the demands and specifications of IATF16949 ("the Specified Product") in this data sheet. THine accepts no liability whatsoever for any product other than the Specified Product for it not conforming to the aforementioned demands and specifications.

5.3 THine accepts liability for demands and specifications of the Specified Product only to the extent that the user and THine have been previously and explicitly agreed to each other.

6. Despite our utmost efforts to improve the quality and reliability of the product, faults will occur with a certain small probability, which is inevitable to a semi-conductor product. Therefore, you are encouraged to have sufficiently redundant or error preventive design applied to the use of the product so as not to have our product cause any social or public damage.

7. Please note that this product is not designed to be radiation-proof.

8. Testing and other quality control techniques are used to this product to the extent THine deems necessary to support warranty for performance of this product. Except where mandated by applicable law or deemed necessary by THine based on the user’s request, testing of all functions and performance of the product is not necessarily performed.

9. Customers are asked, if required, to judge by themselves if this product falls under the category of strategic goods under the Foreign Exchange and Foreign Trade Act.

10. The product or peripheral parts may be damaged by a surge in voltage over the absolute maximum ratings or malfunction, if pins of the product are shorted by such as foreign substance. The damages may cause a smoking and ignition. Therefore, you are encouraged to implement safety measures by adding protection devices, such as fuses.

THine Electronics, Inc.
https://www.thine.co.jp

Copyright©2022 THine Electronics, Inc.

Downloaded from Arrow.com.