© 2025 TE Connectivity. All Rights Reserved.

REVISIONS					
P	LTR	DESCRIPTION	DATE	DWN	APVD
	B	ECN-24-258270 HEX NUTS AND WASHERS LOOSELY ENCLOSED IN BAG	28APR2024	KS	RB
	C	ECN-24-306280 SCREW CHANGE (TORX)	18FEB2025	KS	RB

ELECTRICAL

VOLTAGE RANGE	18-32 VDC
NOMINAL VOLTAGE	24 VDC
INSULATING RESISTANCE, INITIAL	100 MOHM
INSULATING RESISTANCE, AFTER LIFE	50 MOHM
DIELECTRIC WITHSTANDING VOLTAGE	500 VAC
CONTACT DUTY RATING	300 AMP
CONTACT OVERLOAD	2400 AMP 1 SEC/ 600 AMP 20 SEC
CONTACT VOLTAGE DROP INITIAL	150 mV
CONTACT VOLTAGE DROP AFTER LIFE	175 mV
CONTACT LIFE AT NOMINAL VOLTAGE (OHMIC)	50000 CYCLES
CONTACT LIFE MECHANICAL	100000 CYCLES
PULL-IN COIL IMPULSE	APPROX. 3.0 AMP/100MS
DROP-OUT COIL IMPULSE	APPROX. 2.8 AMP/100MS
INPUT RESERVE X1-4	RESERVED FOR FUTURE FUNCTIONS
INPUT TEST X1-1	RESERVED FOR FUTURE FUNCTIONS

GENERAL CHARACTERISTICS

TEMPERATURE RANGE	-40°C TO +85°C (-40°F TO +185°F)
SEALING/PROTECTION	IP 6K9K (DIN40050-9 AND IEC 529.2)
SHOCK G-LEVEL	ISO/DIS 16750-3: 4.2.2.2 CLASS A
VIBRATION	ISO/DIS 16750-3: 4.1.3.2.3 TEST 7
RESISTANCE TO SOLVENTS	ISO/DIS 16750-5 Z_A
MATERIAL HOUSING	PBT SG 0 SW GF30
MATERIAL TERMINALS	CuZn gal. CuSn
ELECTRONIC PCB	MOULDED
WIRE SECTION (NOMINAL LOAD 300 AMP)	95mm²
MOUNTING POSITION	OPTIONAL
WEIGHT	APP. 900 gr
CERTIFICATION	TÜ.EGG. 086-04 ADR2015 9.2.2.3 FOR CONTROL UNIT: T_a=-40°C TO 50 /85°C II2G EEx m ib IIC T6/T4

TIME ADJUSTMENT:

OUTPUT AND INPUT CHARACTERISTICS:
ALL THE TIME VALUES OR INPUT-OUTPUT PROCESSES DECLARED MAY BE MODIFIED BY REVISING THE APPROPRIATE SOFTWARE PROGRAM.
IDLE CURRENT < 5mA (WITHOUT EXTERNAL COMPONENTS I.E. INTRINSIC SAFE CIRCUIT).
OUTPUTS X1-5 AND X1-7: ELECTRICAL LOAD < 300mA, PROTECTION AGAINST SHORT CIRCUIT AND REVERSE VOLTAGE.

FUNCTION

NORMAL SWITCH ON:
THE MAIN SWITCH (88-88a) WILL CLOSE IF THE EMERGENCY SWITCHES S2 AND S3 AND THE IGNITION SWITCH S1 ARE CLOSED.

NORMAL SWITCH OFF:
IF ONLY THE IGNITION SWITCH S1 (X2-2) IS OPENED THE MAIN SWITCH TURNS OFF AFTER A DEFINED TIME I.E: 2 MINUTES.

EMERGENCY SWITCH OFF/ON:
A POLLING SEQUENCE CHECKS THE ABILITY TO SWITCH THE EMERGENCY SIGNAL PATH TO DETECT AN ERROR IF THE OPERATION OF THE EMERGENCY STOP SWITCH CAN NOT LEAD TO SHUTDOWN.

TRANSITION FROM "CLOSED" TO "OPEN":
IF A LOW LEVEL IS DETECTED AT PIN X2-3 AND PIN X2-4, THE MAIN SWITCH SEPARATES THE BATTERIES FROM THE ELECTRICAL SYSTEM. THE SHUTDOWN SHOULD OCCUR WITHIN 3 SECONDS.
APPROXIMATELY 1 SEC. BEFORE THE CONTACT IS OPENED, THE OUTPUT X1-5 SHOULD BE SWITCHED OFF.

TRANSITION FROM "OPEN" TO "CLOSED"
ONCE A HIGH LEVEL IS DETECTED AT PIN X2-3 AND PIN X2-4, AND S1 (ATX2:2) IS CLOSED, THE MAIN SWITCH IS CLOSED AND THE OUTPUT X1-5 IS SWITCHED ON.

THE OUTPUT PIN X1-7 SENDS A POSSIBLE FAULT SIGNAL TO THE INSTRUMENT.

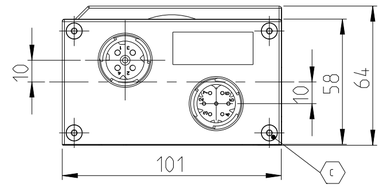

VIEW WITHOUT COVER

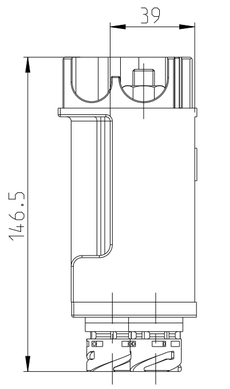

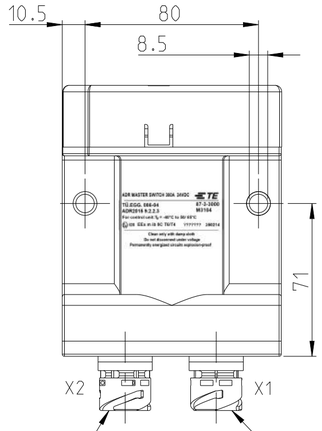

CONNECTOR 4-POLE
ISO 15170-A1-4.1-Sn/K2
A 942 002 1899

CONNECTOR 7-POLE
SIMILAR TOo ISO 15170-A1-4.1-Sn/K2
A 941 000 6999

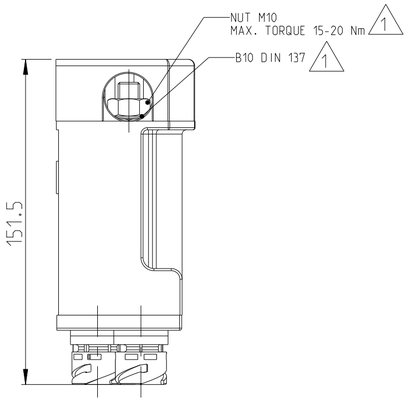

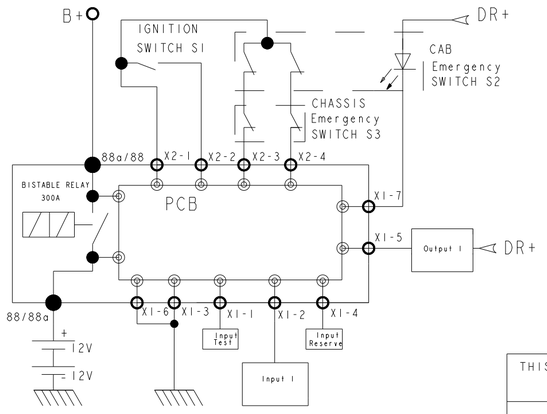

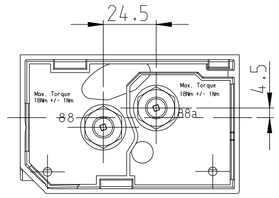

VIEW WITHOUT COVER

1 HEX NUTS AND WASHERS ARE LOOSELY ENCLOSED IN A BAG

THIS DRAWING IS A CONTROLLED DOCUMENT.	DWN K.Seeger 23APR2015	TE Connectivity	
DIMENSIONS: mm	CHK U.Grindemann 10NOV2015	NAME ADR / GGVS ADR / GGVS	
TOLERANCES UNLESS OTHERWISE SPECIFIED: DIN ISO 2768 cL 0 PLC ± 1 PLC ± 2 PLC ± 3 PLC ± 4 PLC ± ANGLES ±	APVD U.Grindemann 11NOV2015	PRODUCT SPEC	
		APPLICATION SPEC	
MATERIAL	FINISH	WEIGHT	
SIZE A2	CAGE CODE 00779	DRAWING NO C-87-3-3000	RESTRICTED TO -
CUSTOMER DRAWING	SCALE 1:2	SHEET 1 OF 1	REV C

Downloaded from Arrow.com.