APPROVAL SHEET
FOR SMARTPHONE SPEAKER

TOTAL PAGE	12	www.be-star.com	RoHS

Customer		Model Name	BMS1511F-11C-08H2.5-DS-4C
Customer P/N		Product No.	131137
Date	13 Jun.2019	Issue No.	BS/TES01.1825A0
Page	01 of 12	Issue Date	2019.06.13

Table of Contents:

1.Test Climatic Condition
2.Description
3.Characteristics
4.Test Setup
5.Drawing
6.Reliability Test
7.Packing
8.History Change Record

Drawn by	Checked by	Approved by	Customer approved
任江凤	杨紫群	张勇磊	

BESTAR Holdings Co., Ltd.
No.199, West Huanghe Road, Changzhou, Jiangsu, P.R. China
Tel: +86 5196 789 6200
Fax: +86 5196 789 6220
E-Mail: Info@be-star.com
Web: www.be-star.com

Downloaded from Arrow.com.

BMS1511F-11C-08H2.5-DS-4C

1.Test Climatic Condition

1.1 Ambient Temperature :15°C~35°C,Preferably at 20°C

1.2 Relative Humidity:25% to 75%

1.3 Air Pressure:86kPa~106kPa

3No.	Item	Specification
1.	Dimension	15 x11 x2.5(mm)
2.	AC Impedance	8.0Ω±20%(at 2KHz/1Vrms)
3.	Rated Input Power	1W(in 1cc box)
4.	Maximum Input Power	1.1W(in 1cc box)
5.	Resonance Frequency	500Hz ±20% (in free air)
6.	Resonance Frequency	800Hz ±20% (in 1.0cc box)
7.	Frequency Response	F0~20KHz
8.	S.P.L	93±3dB/0.1m/1W at 2KHz (in 1.0cc box)
9.	THD	≤35% at 300-500KHz，≤15% at 800KHz,≤10% at 1K，
		≤5% at 2-10KHz(1.0W / 0.1 m) (in 1.0cc box)
10.	Buzzes & Rattles	Must be normal at sine wave 2.45V
		(in 1.0cc box) from 300~3400Hz
11.	Polarity	Positive voltage to (+),Diaphragm moves forward
12.	Operating Temperature	-20~+ 70°C
13.	Storage Temperature	-20~+ 70°C`
14.	Weight	~1.5g±0.3g

2.Description

2.1 Acoustic component Performance Specification

2.2 The present document specifies performance requirements for the acoustic characteristics of speaker

3.Characteristics

3.1 Electrical and Mechanical Characteristics

This print and information there in are proprietary to BESTAR Holdings Co., Ltd. and shall not be used in whole or in part without its written content

Downloaded from Arrow.com.

BMS1511F-11C-08H2.5-DS-4C

4. Test Setup

4.1 Speaker Measurement Circuit

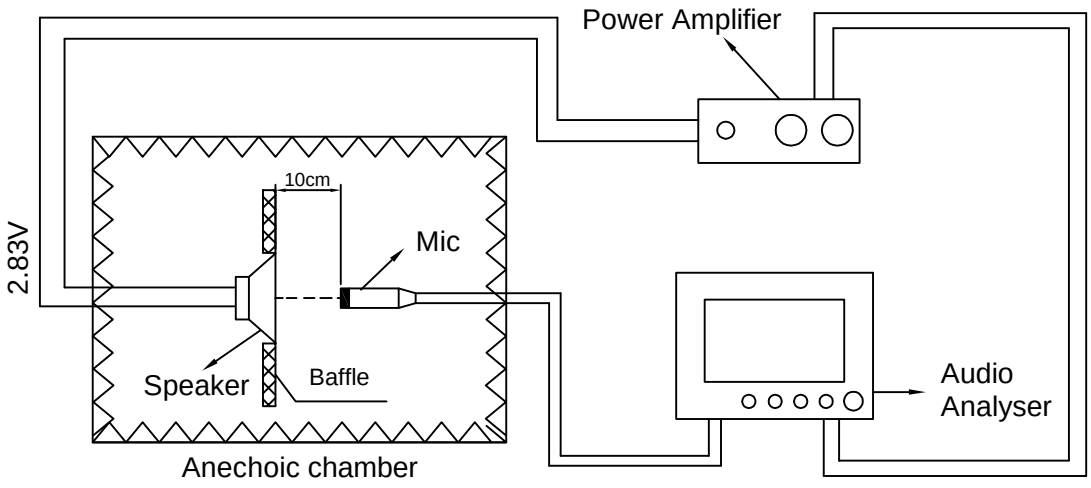

4.2 Baffle Drawing

unit:cm

tolerance:±2

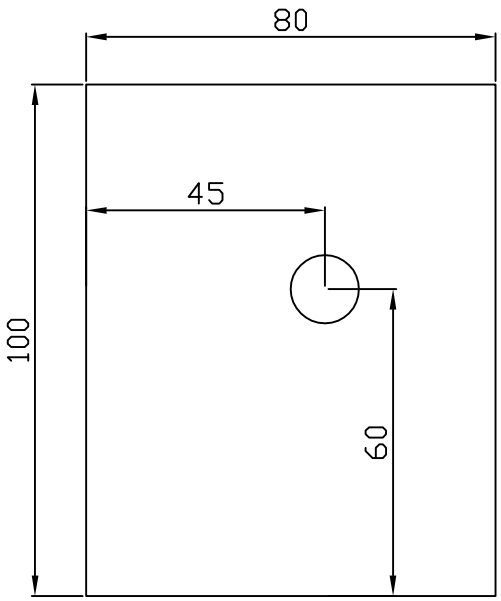

4.3 Test Method

The speaker shall be mounted in a baffle of the dimensions 80X100cm show figure 4.2,

The measuring free-field microphone shall be placed 10cm from DUT,on axis.

The test voltage is 1W and swept sine-wave range is 100Hz~20KHz with a R80 of test sequence

This print and information there in are proprietary to BESTAR Holdings Co., Ltd. and shall not be used in whole or in part without its written content

				Date:	2019.06.13	BMS1511F-11C-08H2.5-DS-4C
				Drawn by:	任江凤	
A	2019.06.13	任江凤		Checked by:	杨紫群	Speaker
Rev.	Date	Drawn	Note	Approved by:	张勇磊	
BESTAR Holdings CO.,LTD http://www.be-star.com info@be-star.com						DRG NO: BS/TES01.1825A0 Page:03 of 12

Downloaded from Arrow.com.

BMS1511F-11C-08H2.5-DS-4C

4.4 Frequency Response Curve (only for reference)

A: Frequency Response Magn 0 dB re 20.00 μPa/V 1/12Oct

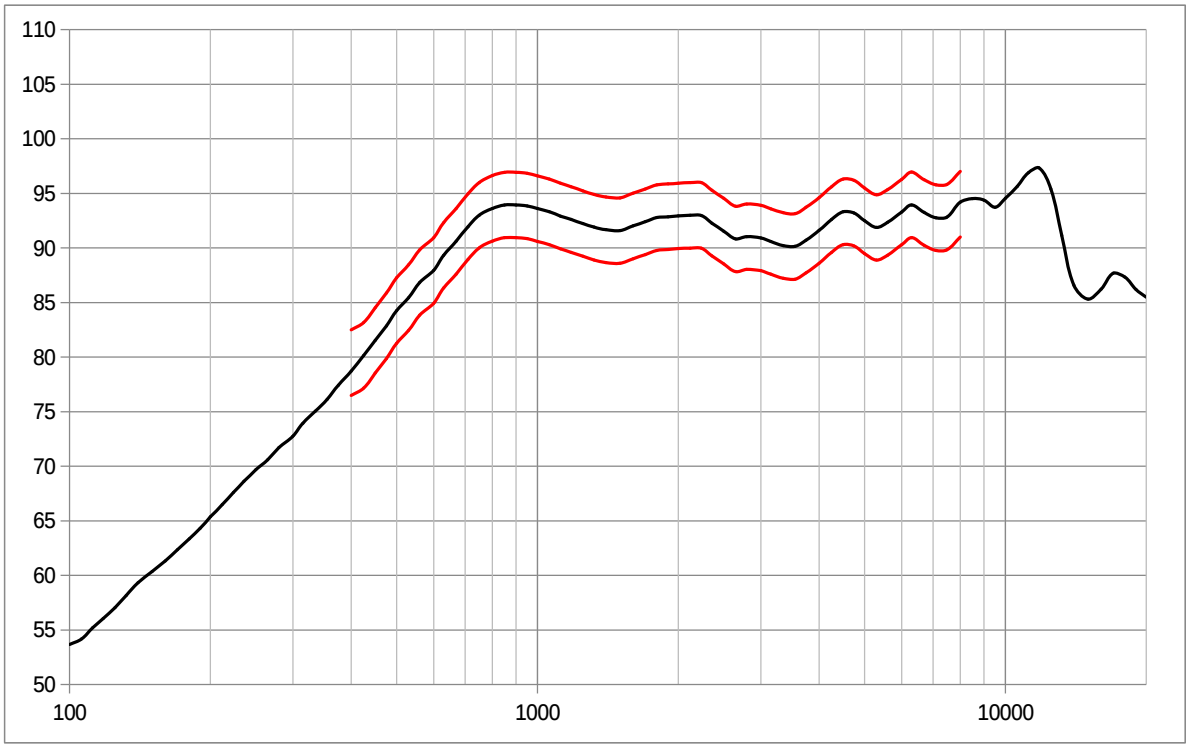

SPL upper and lower limits											
	400	700	800	1000	1320	2000	3000	4000	5000	6000	8000
Upper	+4	+4	+4	+3	+3	+3	+4	+4	+4	+4	+4
Lower	-4	-4	-4	-3	-3	-3	-4	-4	-4	-4	-4

4.4.1 Sensitivity

SPL is expressed in dB rel 20 μPa,computed according to IEC 268-5.
Measurement set up according chapter 4.1 and parameters according chapter 4.4.
This test is performed on the production line by 100%.

This print and information there in are proprietary to BESTAR Holdings Co., Ltd. and shall not be used in whole or in part without its written content

				Date:	2019.06.13	BMS1511F-11C-08H2.5-DS-4C
				Drawn by:	任江凤	
A	2019.06.13	任江凤		Checked by:	杨紫群	Speaker
Rev.	Date	Drawn	Note	Approved by:	张勇磊	
BESTAR Holdings CO.,LTD http://www.be-star.com info@be-star.com						DRG NO: BS/TES01.1825A0 Page:04 of 12

文件号：BS/QDTE045B

Downloaded from Arrow.com.

4.5 Total Harmonic Distortion (only for reference)

A: Frequency Response Magn 0 dB re 20.00 μPa/V 1/12Oct



THD upper limit						
	300	500	800	1000	2000	10000
Upper	35	35	15	10	5	5

4.5.1 THD

THD is measured according test set up in chapter 4.1 and parameters according chapter 4.5

This test is performed on the production line by 100%.

This print and information there in are proprietary to BESTAR Holdings Co., Ltd. and shall not be used in whole or in part without its written content

				Date:	2019.06.13	BMS1511F-11C-08H2.5-DS-4C
				Drawn by:	任江凤	
A	2019.06.13	任江凤		Checked by:	杨紫群	Speaker
Rev.	Date	Drawn	Note	Approved by:	张勇磊	
BESTAR Holdings CO.,LTD http://www.be-star.com info@be-star.com						DRG NO: BS/TES01.1825A0 Page:05 of 12

文件号：BS/QDTE045B

Downloaded from Arrow.com.

BMS1511F-11C-08H2.5-DS-4C

4.6 F0 Curve (only for reference)

A: Frequency Response Magn 0 dB re 20.00μPa/V 1/12Oct

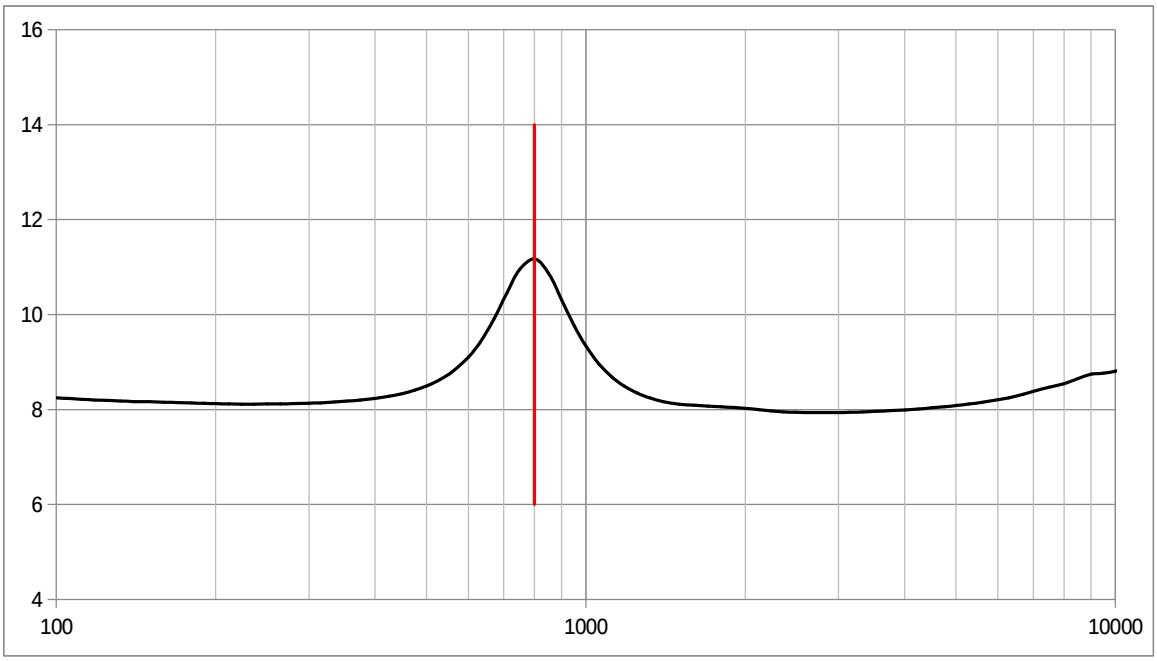

4.6.1 Resonance Frequency

Resonance frequency is measured according test set up in chapter 4.1 and parameters according chapter 4.6

This test is performed on the production line by 100%.

This print and information there in are proprietary to BESTAR Holdings Co., Ltd. and shall not be used in whole or in part without its written content

				Date:	2019.06.13	BMS1511F-11C-08H2.5-DS-4C
				Drawn by:	任江凤	
A	2019.06.13	任江凤		Checked by:	杨紫群	Speaker
Rev.	Date	Drawn	Note	Approved by:	张勇磊	
BESTAR Holdings CO.,LTD http://www.be-star.com info@be-star.com						DRG NO: BS/TES01.1825A0 Page:06 of 12

文件号：BS/QDTE045B

Downloaded from Arrow.com.

4.7 R&B Curve (only for reference)

A: Frequency Response Magn 0 dB re 20.00μPa/V 1/12Oct

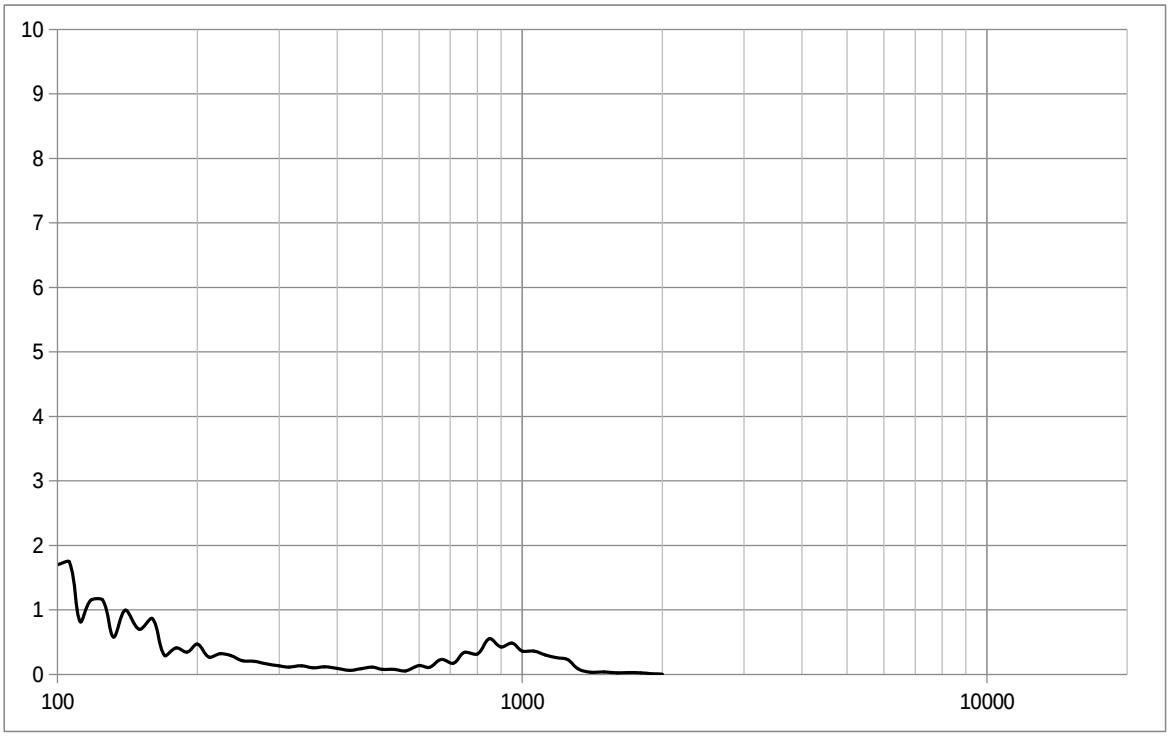

4.7.1 R&B

R&B is measured according test set up in chapter 4.1 and parameters according chapter 4.7

This test is performed on the production line by 100%.

This print and information there in are proprietary to BESTAR Holdings Co., Ltd. and shall not be used in whole or in part without its written content

Downloaded from Arrow.com.

BMS1511F-11C-08H2.5-DS-4C

5. Drawing

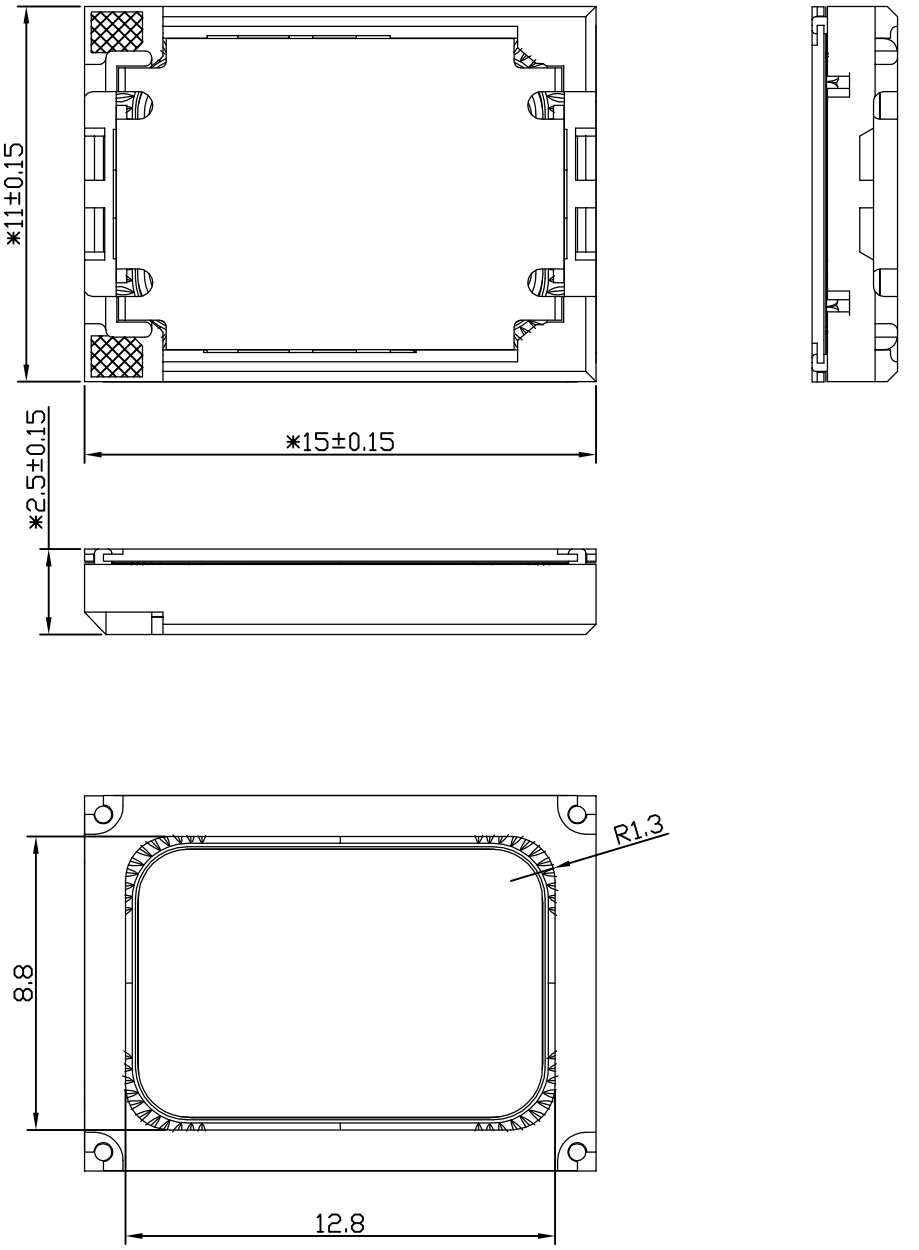

unit:mm
tolerance:±0.2

				Date:	2019.06.13	BMS1511F-11C-08H2.5-DS-4C
				Drawn by:	任江凤	
A	2019.06.13	任江凤		Checked by:	杨紫群	Speaker
Rev.	Date	Drawn	Note	Approved by:	张勇磊	
BESTAR Holdings CO.,LTD http://www.be-star.com info@be-star.com						DRG NO: BS/TES01.1825A0 / Page:08 of 12

This print and information there in are proprietary to BESTAR Holdings Co., Ltd. and shall not be used in whole or in part without its written content

Downloaded from Arrow.com.

BMS1511F-11C-08H2.5-DS-4C

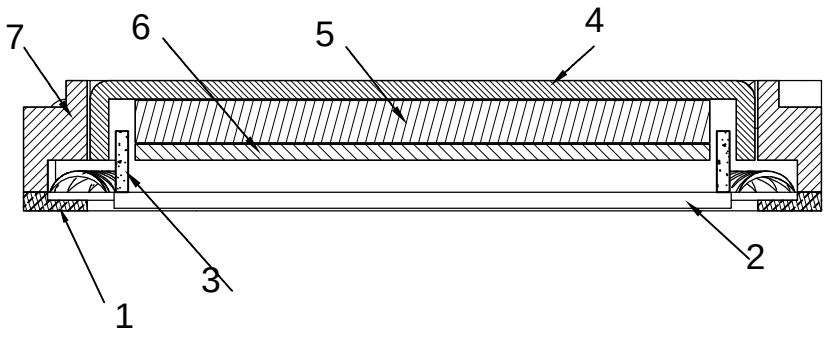

No	Description of the part	Material
1	Front Cover	Cu
2	Diaphragm	PEEK+AL
3	VC	SDHT
4	Underyoke	SPCC
5	Magnet	Nd-Fe-B
6	Polarpiece	SPCC
7	Frame	PPA

This print and information there in are proprietary to BESTAR Holdings Co., Ltd. and shall not be used in whole or in part without its written content

				Date:	2019.06.13	BMS1511F-11C-08H2.5-DS-4C
				Drawn by:	任江凤	
A	2019.06.13	任江凤		Checked by:	杨紫群	Speaker
Rev.	Date	Drawn	Note	Approved by:	张勇磊	
BESTAR Holdings CO.,LTD http://www.be-star.com info@be-star.com					DRG NO: BS/TES01.1825A0	Page:09 of 12

文件号：BS/QDTE045B

Downloaded from Arrow.com.

6. Reliability Test

6.1 Load Test

Power (Nom)	1W(with white noise in 1cc box)
Duration	96hrs

6.2 High Temperature Test

Temperature	+70±3°C
Duration	96hrs

6.3 Low Temperature Test

Temperature	-20±3°C
Duration	96hrs

6.4 Damp Heat

Temperature	40±3°C
Relative Humidity	90%-95%RH
Duration	96hrs

6.5 Temperature Cycle Test

Cycles	10

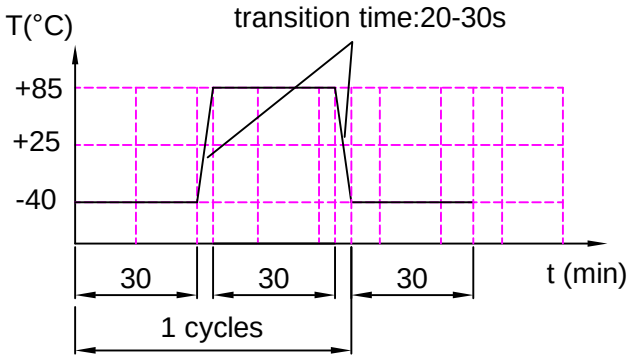

6.6 Drop Test

Height	1.0m
Drop face	thick ness wooden board (20mm)
Times	10 (three times in each direction)

Notice:

1.Immediately after reliability test,the samples shall be stored under climatic conditions such as normally exist in ordinary rooms or laboratories.Unless otherwise noted,the recovery period shall be 4hrs at least before performance testing.

2. After reliability test ,all samples must be meet the requirements specified

3.Sensitivity difference at 2~5KHz shall be within ±3dB from initial value after test.

This print and information there in are proprietary to BESTAR Holdings Co., Ltd. and shall not be used in whole or in part without its written content

Downloaded from Arrow.com.

BMS1511F-11C-08H2.5-DS-4C

7. Packing

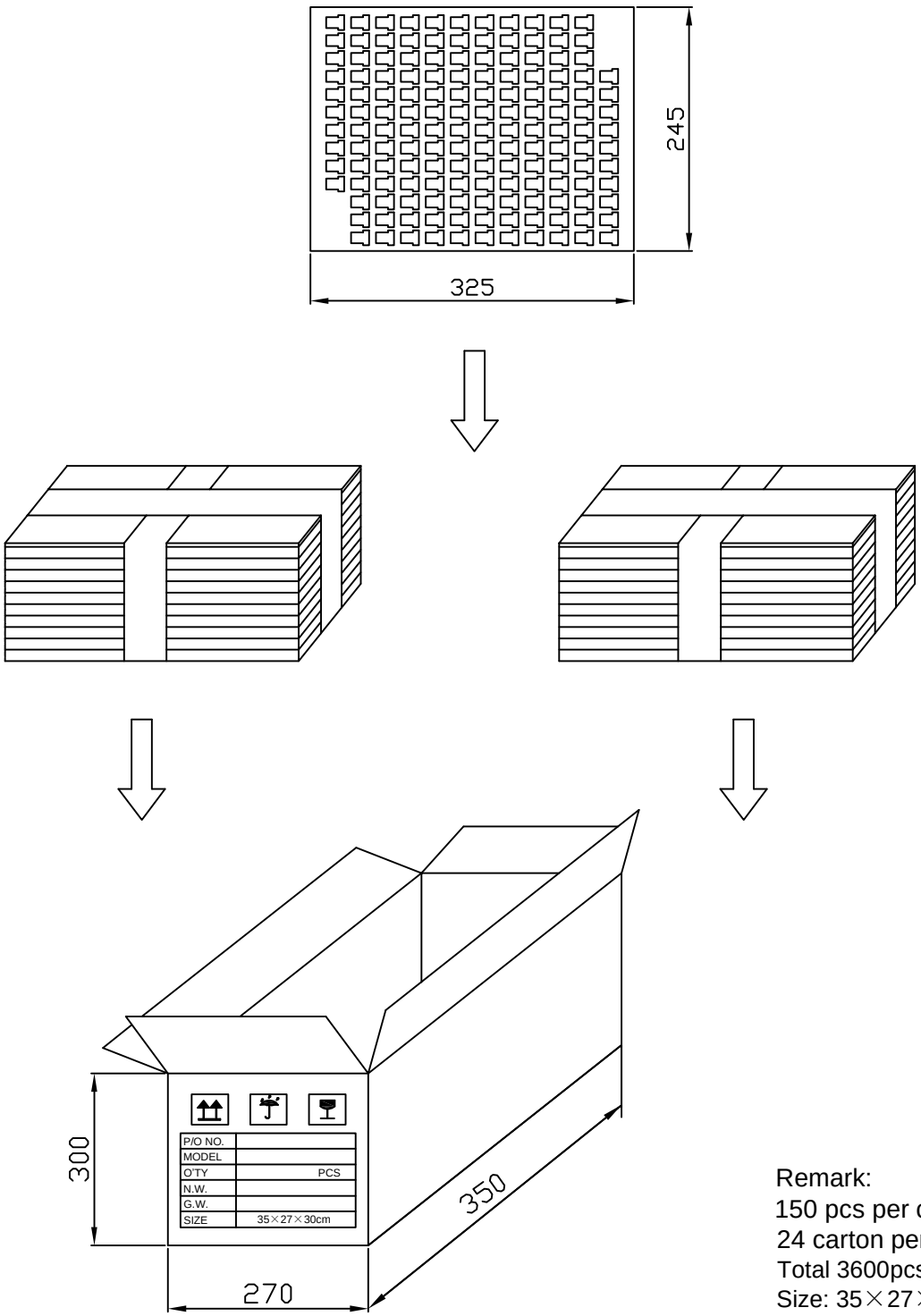

Remark:
150 pcs per carton
24 carton per box
Total 3600pcs per box
Size: 35×27×30(cm)

				Date:	2019.06.13	BMS1511F-11C-08H2.5-DS-4C
				Drawn by:	任江凤	
A	2019.06.13	任江凤		Checked by:	杨紫群	Speaker
Rev.	Date	Drawn	Note	Approved by:	张勇磊	
BESTAR Holdings CO.,LTD http://www.be-star.com info@be-star.com					DRG NO: BS/TES01.1825A0	Page:11 of 12

This print and information there in are proprietary to BESTAR Holdings Co., Ltd. and shall not be used in whole or in part without its written content

Downloaded from Arrow.com.

BMS1511F-11C-08H2.5-DS-4C

8. History Change Record

version No.	Change Items		Date	Drawn	Approved
	Before	After			
A			2019.06.13	任江凤	张勇磊

This print and information there in are proprietary to BESTAR Holdings Co., Ltd. and shall not be used in whole or in part without its written content

				Date:	2019.06.13	BMS1511F-11C-08H2.5-DS-4C
				Drawn by:	任江凤	
A	2019.06.13	任江凤		Checked by:	杨紫群	Speaker
Rev.	Date	Drawn	Note	Approved by:	张勇磊	
BESTAR Holdings CO.,LTD http://www.be-star.com info@be-star.com						DRG NO: BS/TES01.1825A0 Page:12 of 12

文件号：BS/QDTE045B

Downloaded from Arrow.com.