Downloaded from Arrow.com.

| TITLE: | PROBE TOOL, EXTRACTION SIZE 12 | DWG NO: | AT11-337-1205 | REV: | A1 | SH: | 1 | OF: | 1 |
|---|---|---|---|---|---|---|---|---|---|

| REVISIONS | | | | | |
|---|---|---|---|---|---|
| REV | ECO | DESCRIPTION | DATE | BY | APPR |
| A1 | | RELEASE NEW PRODUCT | 16JUN15 | ORION | TOMMY |

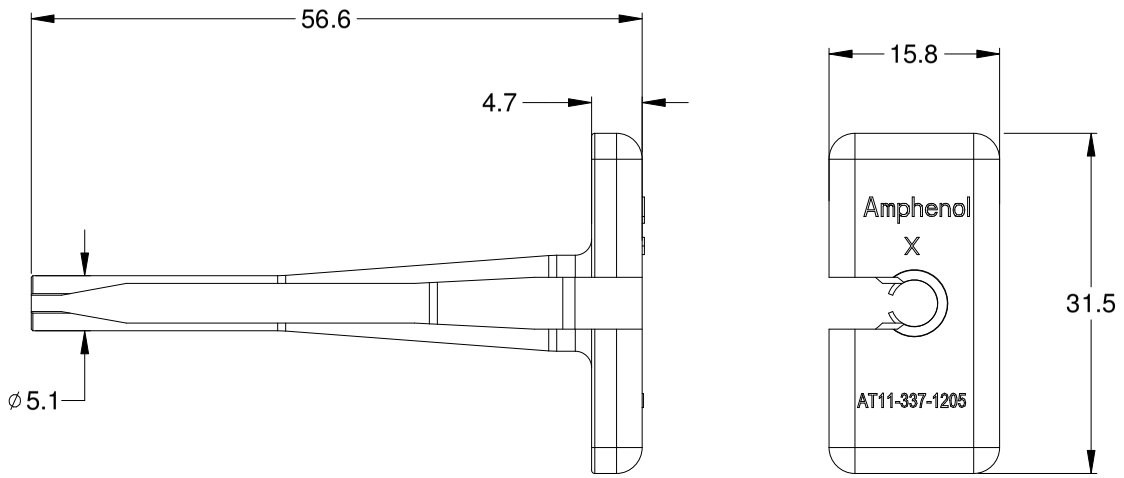


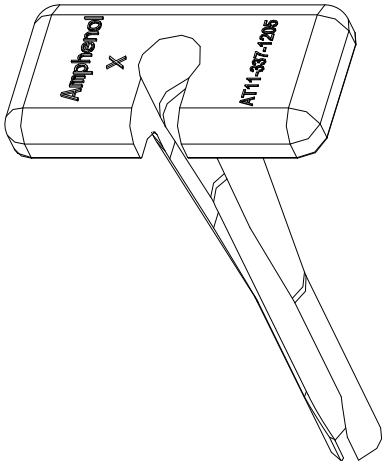


NOTES: UNLESS OTHERWISE SPECIFIED

1. MATERIAL: THERMOPLASTIC; COLOR: ORANGE
2. RoHS COMPLIANT
3. USE WITH AHDP,AHD SERIES
4. ALL DIMENSIONS ARE FOR REFERENCE USE ONLY.

| | AT11-337-1205 | | |
|---|---|---|---|
| | PART NUMBER | DESCRIPTION | ITEM |
| QUANTITY | MATERIALS LIST | | |

UNLESS OTHERWISE SPECIFIED
1) All dimensions are in metric(mm).
2) Tolerances are as follows:
1 PL DEC ±0.30 | Fractions ±1/64
2 PL DEC ±0.15 | Angles ±1°
3 PL DEC ±0.08
3) Note reference = X

MATERIAL SPECIFICATIONS:

PROCESS SPECIFICATIONS:

NEXT ASS'Y:

| SIGNATURES | | DATE |
|---|---|---|
| DRAWN: | ORION.LI | 16JUN15 |
| CHECKED: | | |
| ENGINEER: | | |
| APPROVAL: | TOMMY.XIE | 16JUN15 |
| CUSTOMER: | | |

THIS DRAWING IS SUPPLIED FOR INFORMATION ONLY. DESIGN FEATURES, SPECIFICATIONS AND PERFORMANCE DATA SHOWN HEREON ARE THE PROPERTY OF THE AMPHENOL CORPORATION. NO RIGHTS OF REPRODUCTION ARE IMPLIED. ALL DIMENSIONS ARE SUBJECT TO NORMAL MANUFACTURING VARIATIONS.

Amphenol

Sine Systems - www.amphenol-sine.com
44724 Morley Drive
Clinton Township, MI 48036

PROBE TOOL, EXTRACTION SIZE 12

| SIZE | TYPE | DWG NO: | REVISION |
|---|---|---|---|
| A | C- | AT11-337-1205 | A1 |

SCALE: NONE SHEET 1 OF 1