EVALUATION BOARD MANUAL
EC2832AA2-EVB

EVALUATION KIT MANUAL
EC2832AA2-EVK

for EC2832 series Bluetooth® low energy Module

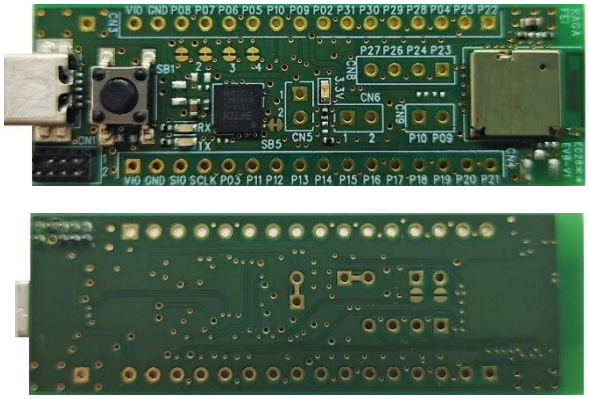

Copyright 2023 KAGA FEI Co., Ltd.

Downloaded from Arrow.com.

Contents

1. Introduction 3
2. Mounted module 3
3. Content 4
4. Evaluation board circuit schematic 4
5. Evaluation board layout 5
6. Silkscreen Printing 5
7. Pin Descriptions 6
8. How to use 6
9. For software development 7
10. MEMO 8

Copyright 2023 KAGA FEI Co., Ltd.

Downloaded from Arrow.com.

1.Introduction

This evaluation board is applicable for KAGA FEI's ***Bluetooth*® low energy** module, EC2832 Series.

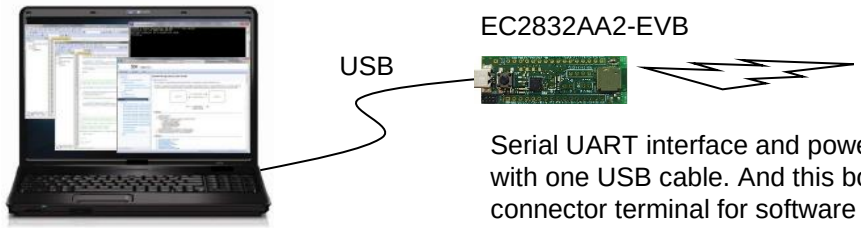

Serial UART interface and power supply are possible with one USB cable. And this board has the SWD connector terminal for software development.

2.Mounted module

EC2832 (9.6mm x 12.9mm x 2.0mm_MAX)

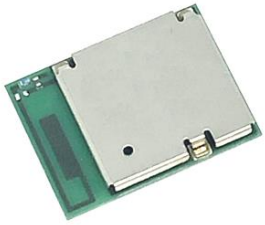

Nordic nRF52832 / ARM® Cortex™-M4F 32 bit processor
47-pin Land Grid Array / 30GPIOs / SWD

- Basic Module –
KAGA FEI writes S132 SoftDevice to this product (EC2832AA2).
The user can develop unique application for the module.

Copyright 2023 KAGA FEI Co., Ltd.

Downloaded from Arrow.com.

3.Content

1	EC2832AA2-EVB Evaluation Board + USB cable for Evaluation Board	1 pc
2	J-Link Lite (EC2832AA2-EVK Only) + USB cable for Evaluation Board *1	1 set

1. EC2832AA2-EVB

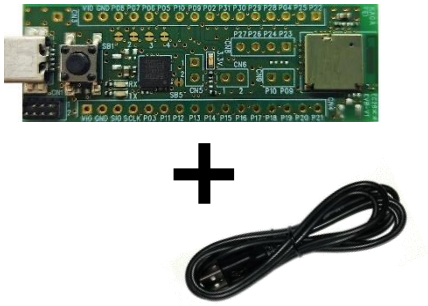

2. EC2832AA2-EVK

*1 Notes on using J-Link Lite

J-Link Lite is only delivered and supported as part of an evaluation kit, which includes an evaluation board. It may only be used with the evaluation board it came with, and not to be used for commercial product development.

4.Evaluation board circuit schematic

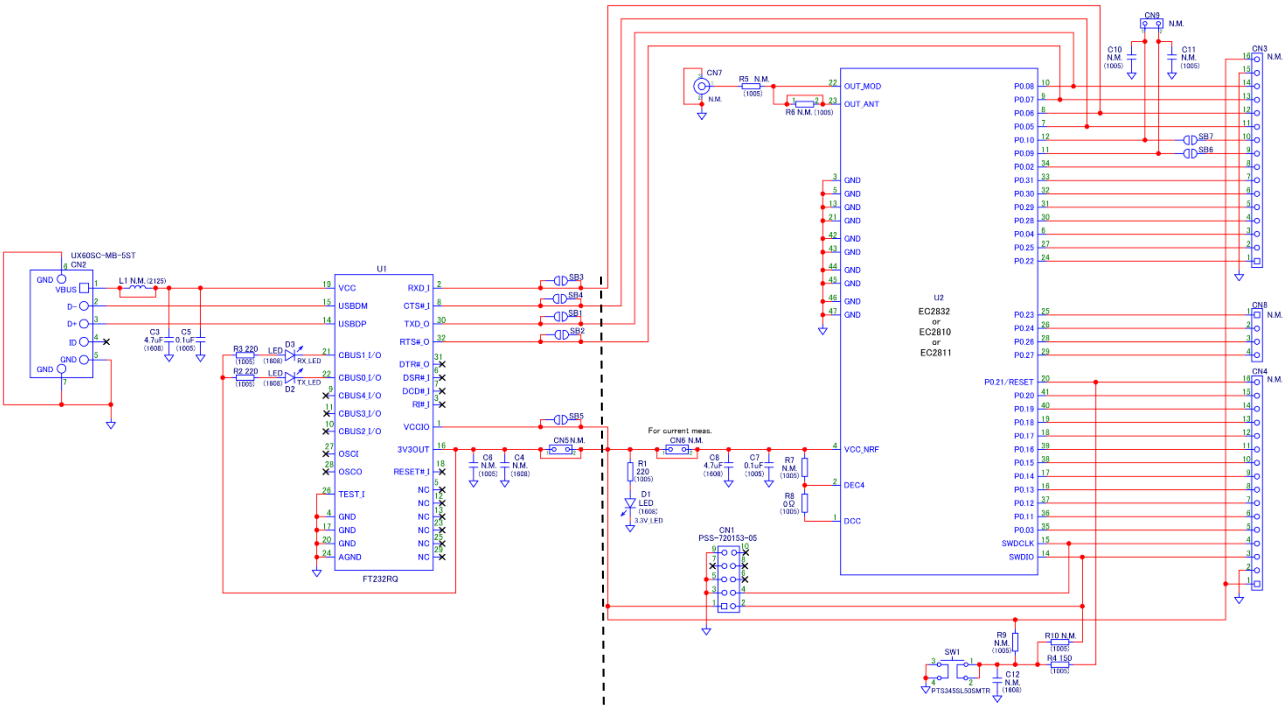

Please cut these 6 lines on the board
if you want to separate U1 and U2.

Copyright 2023 KAGA FEI Co., Ltd.

Downloaded from Arrow.com.

5.Evaluation board layout

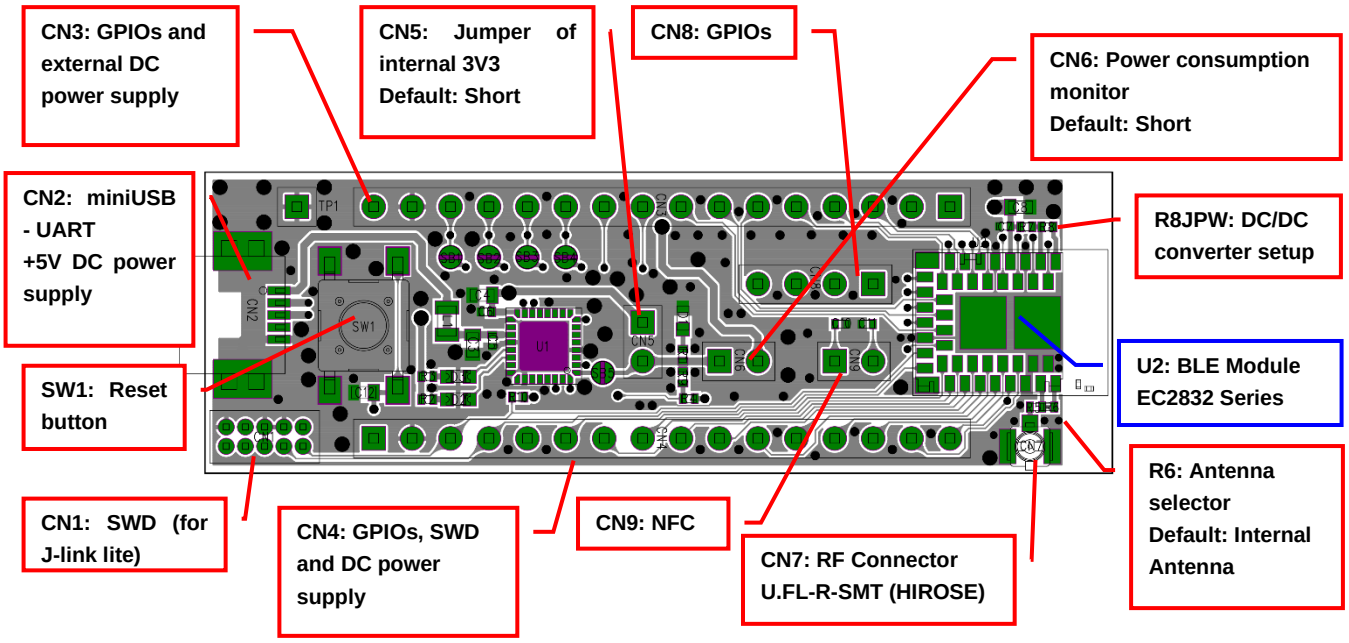

1) All pin headers are 2.54mm pitch. And distance between **CN3** and **CN4** is **15.24mm**.
2) **CN3,4,5,6,8, C4,6,10-12, L1, R5-7,9,10, SB1-7, TP1** are not mounted (N.M.).
3) **D1 (LED):** 3.3V Indicator
4) **D2 (LED):** UART TX Indicator
5) **D3 (LED):** UART RX Indicator
6) **SW1 (Push button):** Module Reset (active low)

6.Silkscreen Printing

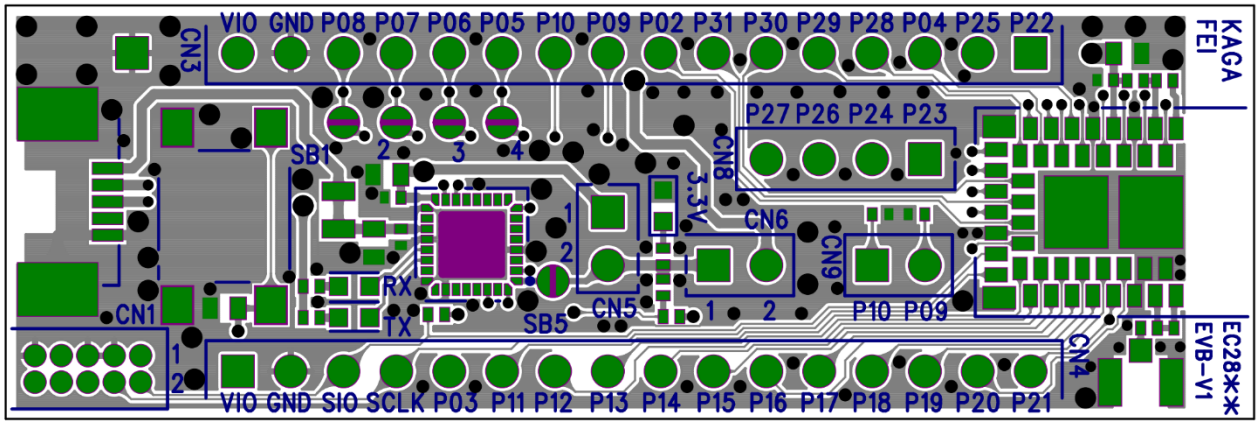

Copyright 2023 KAGA FEI Co., Ltd.

Downloaded from Arrow.com.

7.Pin Descriptions

Pin No.	CN3	CN4	CN8
1	P0.22	VIO	P0.23
2	P0.25	GND	P0.24
3	P0.04	SWDIO	P0.26
4	P0.28	SWDCLK	P0.27
5	P0.29	P0.03	-
6	P0.30	P0.11	-
7	P0.31	P0.12	-
8	P0.02	P0.13	-
9	NFC/P0.09	P0.14	-
10	NFC/P0.10	P0.15	-
11	P0.05	P0.16	-
12	P0.06	P0.17	-
13	P0.07	P0.18	-
14	P0.08	P0.19	-
15	GND	P0.20	-
16	VIO	P0.21/RESET	-

8.How to use

It is very easy just to tie this board to the PC with a USB cable. It is not necessary to change the setting of the board. The power supply of the module supplies by default 3.3V from 3V3OUT of FT232RQ.

Copyright 2023 KAGA FEI Co., Ltd.

Downloaded from Arrow.com.

9.For software development

・Nordic-DK and Use case

Nordic nRF Connect etc.

NORDIC DK

miniUSB

SWD

EC2832AA2-EVB

SWD : Serial Wire Debug
It can be use J-Link Lite CortexM-9 JTAG/SWD Emulator that attached with EC2832AA2-EVK.

CN1 supports the connection of the 10 pin 1.27 mm flat cable.

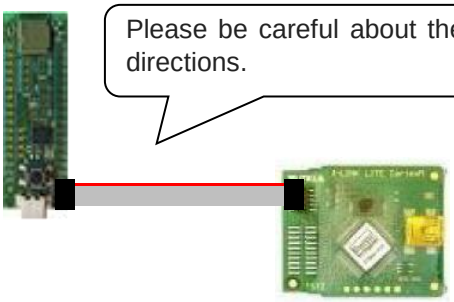

Please be careful about the directions.

・SEGGER Embedded Studio

・Visual Studio Code

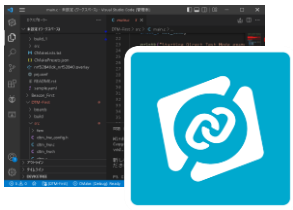

・nRF Connect for Desktop

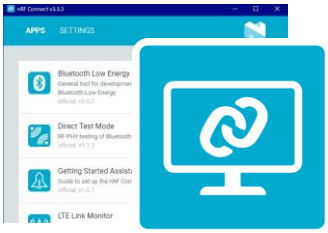

etc.

・Nordic-DK
https://www.nordicsemi.com/Products/Development-hardware/nrf52-dk

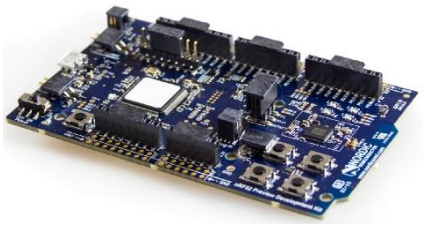

Copyright 2023 KAGA FEI Co., Ltd.

Downloaded from Arrow.com.

10.MEMO

1) **Current measurment**

To measure the current, please cut the shorting 1pin and 2 pin of CN6. And connect an ampere-meter between the pins of connector CN6 to monitor the current directly.

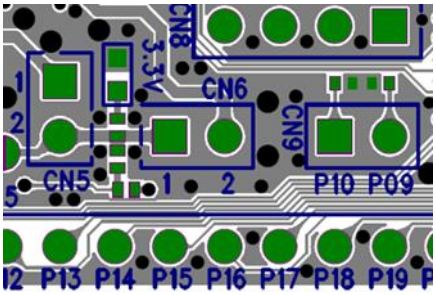

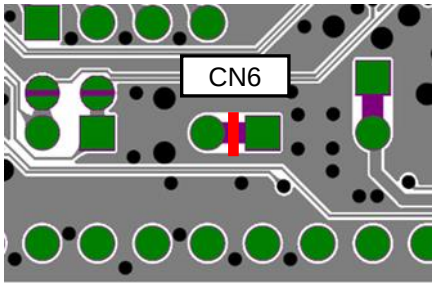

2) **About the power supply of the module**

When you use external power supply, please supply power from 15 and 16pin of CN3. On this configuration, please cut the short circuit 1pin and 2pin of CN5 in order to separate 3V3OUT of FT232RQ.

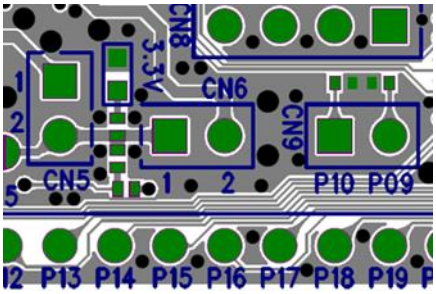

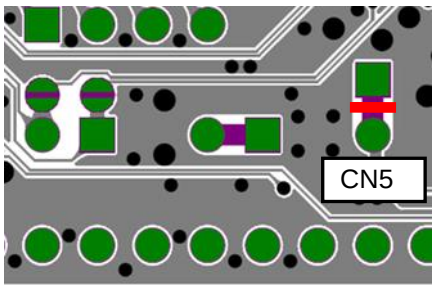

3) **USB to serial UART interface**

It needs to install driver of FT232RQ to use USB for UART interface.
The drivers are available on FTDI website.

http://www.ftdichip.com/Drivers/D2XX.htm

In addition, by the application development, please assign GPIO as follows.

GPIO	UART
P0.05	RTS
P0.06	TX
P0.07	CTS
P0.08	RX

Copyright 2023 KAGA FEI Co., Ltd.

Downloaded from Arrow.com.

4) Size and Coordinate information

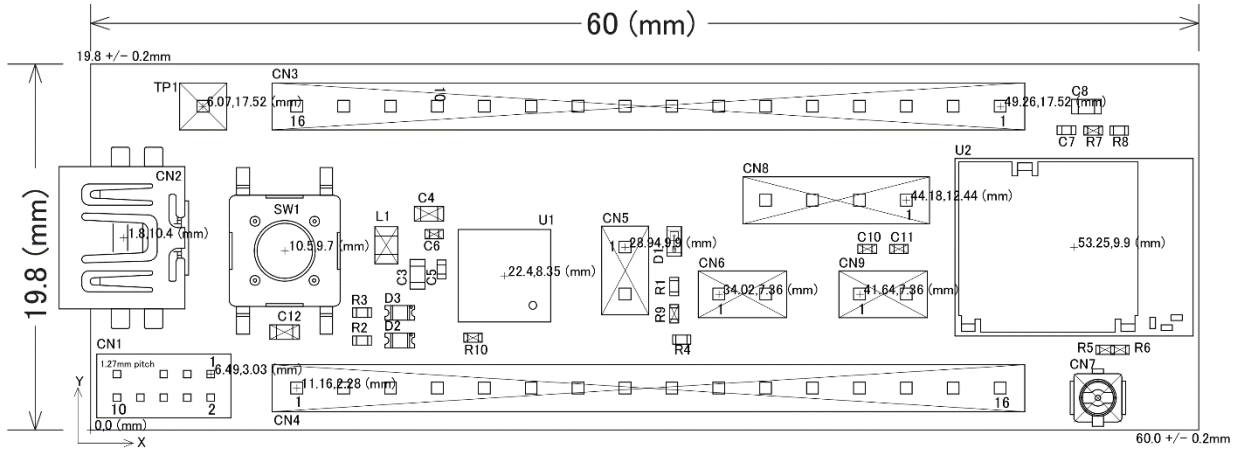

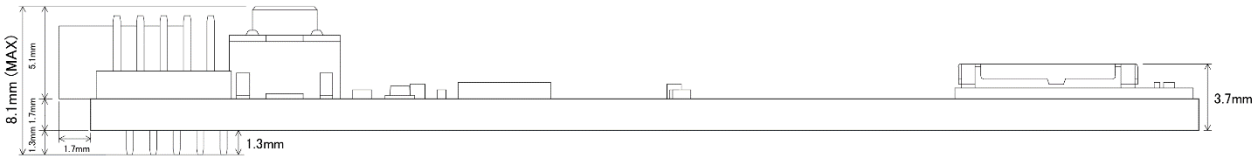

Copyright 2023 KAGA FEI Co., Ltd.

Downloaded from Arrow.com.