Product data sheet

Specifications



Complete control station, Harmony XALD, XALK, plastic, yellow lid, 1 red mushroom push button 40mm, turn to release, 2NC

XALK178F

Main

Range of product	Harmony XALK
Product or component type	Complete control station
Device short name	XALK
Product destination	For XB5 Ø 22 mm control and signalling units
Control station application	Emergency switching off function Emergency stop function
Colour of base of enclosure	Light grey (RAL 7035)
Colour of cover	Yellow (RAL 1021)
Material	Polycarbonate
Operator profile	1 mushroom head push-button
Operators description	Red unmarked 2 NC
Reset	Turn to release
Control station composition	1 mushroom head Ø 40 mm push-button, red 2 NC unmarked marking
Contact operation	Slow-break

Complementary

AC control voltage 50 HZ	120…600 V
Cable entry	1 knock-out for cable entry 0…14 mm 2 knock-outs for Pg 13 cable gland and ISO M20 0…12 mm
AC control voltage 60 HZ	120…600 V
Product weight	0.194 kg
DC control voltage	125…600 V
Resistance to high pressure washer	7000000 Pa at 55 °C, distance : 0.1 m
Number of command positions	1
Number of indicator lights	0
Number of push buttons	0
Positive opening	With conforming to IEC 60947-5-1 appendix K
Operating travel	1.5 mm (NC changing electrical state) 4.3 mm (total travel)
Operating force	44 N
Number of selector switches	0
Mechanical durability	300000 cycles

Disclaimer: This documentation is not intended as a substitute for and is not to be used for determining suitability or reliability of these products for specific user applications

Downloaded from Arrow.com.

Connections - terminals	Screw clamp terminals, <= 2 x 1.5 mm² with cable end conforming to IEC 60947-1 Screw clamp terminals, >= 1 x 0.22 mm² without cable end conforming to IEC 60947-1
Number of key switches	0
Tightening torque	0.8…1.2 N.m conforming to IEC 60947-1
Shape of screw head	Cross compatible with Philips no 1 screwdriver Cross compatible with pozidriv No 1 screwdriver Slotted compatible with flat Ø 4 mm screwdriver Slotted compatible with flat Ø 5.5 mm screwdriver
Contacts material	Silver alloy (Ag/Ni)
Short-circuit protection	10 A cartridge fuse type gG conforming to IEC 60947-5-1
[Ith] conventional free air thermal current	10 A conforming to IEC 60947-5-1
Number of mushroom-shaped push-buttons	1
[Ui] rated insulation voltage	600 V (pollution degree 3) conforming to IEC 60947-1
[Uimp] rated impulse withstand voltage	6 kV conforming to IEC 60947-1
[Ie] rated operational current	3 A at 240 V, AC-15, A600 conforming to IEC 60947-5-1 6 A at 120 V, AC-15, A600 conforming to IEC 60947-5-1 0.1 A at 600 V, DC-13, Q600 conforming to IEC 60947-5-1 0.27 A at 250 V, DC-13, Q600 conforming to IEC 60947-5-1 0.55 A at 125 V, DC-13, Q600 conforming to IEC 60947-5-1 1.2 A at 600 V, AC-15, A600 conforming to IEC 60947-5-1
Electrical durability	1000000 cycles, AC-15, 2 A at 230 V, operating rate <3600 cyc/h, load factor: 0.5 conforming to IEC 60947-5-1 appendix C 1000000 cycles, AC-15, 3 A at 120 V, operating rate <3600 cyc/h, load factor: 0.5 conforming to IEC 60947-5-1 appendix C 1000000 cycles, AC-15, 4 A at 24 V, operating rate <3600 cyc/h, load factor: 0.5 conforming to IEC 60947-5-1 appendix C 1000000 cycles, DC-13, 0.2 A at 110 V, operating rate <3600 cyc/h, load factor: 0.5 conforming to IEC 60947-5-1 appendix C 1000000 cycles, DC-13, 0.5 A at 24 V, operating rate <3600 cyc/h, load factor: 0.5 conforming to IEC 60947-5-1 appendix C
Emergency power off	No
Electrical reliability	Λ < 10exp(-6) at 5 V, 1 mA conforming to IEC 60947-5-4 Λ < 10exp(-8) at 17 V, 5 mA conforming to IEC 60947-5-4
Number of contacts as normally closed contact	2
Number of contacts as normally open contact	0
Number of contacts as change-over contact	0
Housing material	Plastic
Housing colour	Yellow
colour of cover	Yellow

Environment

Protective treatment	TH
Ambient air temperature for storage	-40…70 °C
Ambient air temperature for operation	-40…70 °C
Overvoltage category	Class II conforming to IEC 60536
IP degree of protection	IP66 conforming to IEC 60529 IP67 IP69 IP69K

Downloaded from Arrow.com.

NEMA degree of protection	NEMA 13 NEMA 4X
IK degree of protection	IK03 conforming to IEC 62262
Standards	IEC 60204-1 IEC 60947-5-1 IEC 60364-5-53 ISO 13850 CSA C22.2 No 14 UL 508 IEC 60947-5-5 IEC 60947-5-4 IEC 60947-1 UL 60947-5-1 UL 60947-5-5 UL 60947-1
Vibration resistance	5 gn (f= 12…500 Hz) conforming to IEC 60068-2-6
Shock resistance	30 gn (duration = 18 ms) for half sine wave acceleration conforming to IEC 60068-2-27 50 gn (duration = 11 ms) for half sine wave acceleration conforming to IEC 60068-2-27
IP degree of protection	IP66/IP67/IP69/IP69K
NEMA degree of protection	NEMA 4X/13

Packing Units

Unit Type of Package 1	PCE
Number of Units in Package 1	1
Package 1 Height	9.700 cm
Package 1 Width	7.000 cm
Package 1 Length	7.000 cm
Package 1 Weight	168.000 g
Unit Type of Package 2	S03
Number of Units in Package 2	40
Package 2 Height	30.000 cm
Package 2 Width	30.000 cm
Package 2 Length	40.000 cm
Package 2 Weight	7.202 kg
Unit Type of Package 3	P06
Number of Units in Package 3	320
Package 3 Height	75.000 cm
Package 3 Width	60.000 cm
Package 3 Length	80.000 cm
Package 3 Weight	67.964 kg

Contractual warranty

Warranty (in months)	18

Downloaded from Arrow.com.

Environmental Data

Schneider Electric aims to achieve Net Zero status by 2050 through supply chain partnerships, lower impact materials, and circularity via our ongoing “Use Better, Use Longer, Use Again” campaign to extend product lifetimes and recyclability.

Environmental Data explained >

How we assess product sustainability >

Environmental footprint

Total lifecycle Carbon footprint	**1 kg CO2 eq.**
Carbon footprint of the manufacturing phase [A1 to A3]	**1 kg CO2 eq.**
Carbon footprint of the distribution phase [A4]	**0 kg CO2 eq.**
Carbon footprint of the installation phase [A5]	**0 kg CO2 eq.**
Carbon footprint of the use phase [B2, B3, B4, B6]	**0.1 kg CO2 eq.**
Carbon footprint of the end-of-life phase [C1 to C4]	**0 kg CO2 eq.**
Environmental Disclosure	Product Environmental Profile

Use Better

Materials and Substances

Packaging made with recycled cardboard	**No**
Packaging without single use plastic	**No**
EU RoHS Directive	Compliant
REACh Regulation	Free of Substances of Very High Concern above the threshold
California proposition 65	**WARNING: This product can expose you to chemicals including: Lead and lead compounds, which is known to the State of California to cause cancer and birth defects or other reproductive harm. For more information go to www.P65Warnings.ca.gov**

Use Longer

Lifetime extension

Repair	**No**

Use Again

Repack and remanufacture

Recyclability potential, in %	**18**
End of life manual availability	End of Life Information
Take-back	**No**
WEEE Label	**The product must be disposed on European Union markets following specific waste collection and never end up in rubbish bins**

Downloaded from Arrow.com.

Dimensions Drawings

Dimensions

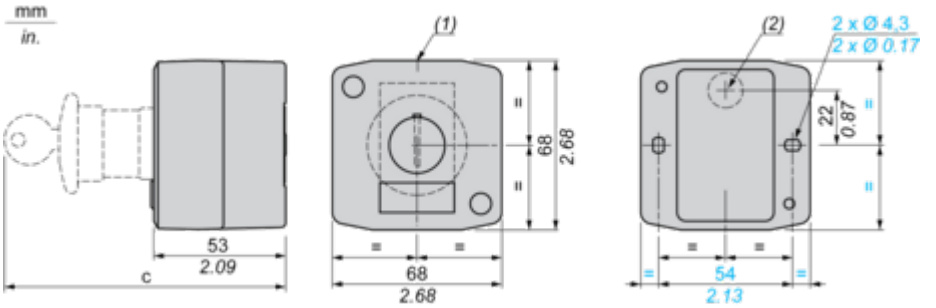

(1) 2 knock-outs for Pg 13.5 cable gland, maximum capacity 12 mm/0.47 in.
(2) Knock-out for cable entry, maximum capacity 14 mm/0.55 in.

Control station fitted with:	c in mm	c in in.
Flush pushbutton	62	2.44
Pilot light	64	2.52
Illuminated pushbutton	65.5	2.58
Projecting pushbutton	66	2.60
Selector switch	80	3.15
Mushroom head pushbutton	91.5	3.58
Latching mushroom head Emergency stop pushbutton with key	115	4.53
Key switch	105.5	4.15

Downloaded from Arrow.com.

Technical Illustration

Dimensions

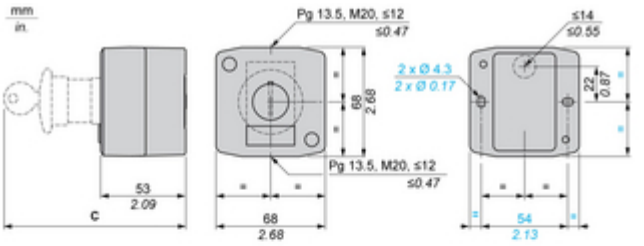

C		mm	in.
	ZB5AA●, ZB5AH0●	62	2.44
	ZB5AV●	64	2.52
	ZB5AW3●	65.5	2.58
	ZB5AL●, ZB5AW1●, ZB5AH●, ZB5AH●3	66	2.6
	ZB5AD●, ZB5AK●	80	3.15
	ZB5AS8●, ZB5AT●, ZB5AC●, ZB5AR●, ZB5AW4●, ZB5AW6●, ZB5AS4●, ZB5AS5●, ZB5AS6●	91.5	3.58
	ZB5AS9●, ZB5AS1●, ZB5AS7●	115	4.53
	ZB5AG●	105.5	4.15

Downloaded from Arrow.com.

Image of product / Alternate images

Alternative





Downloaded from Arrow.com.

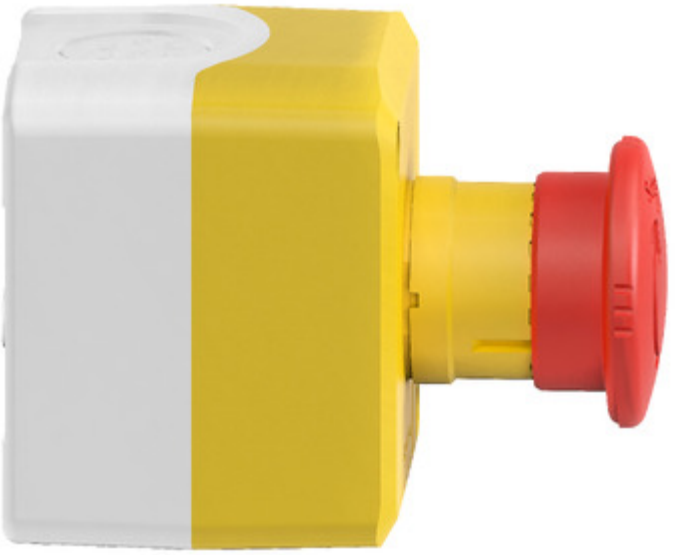



Downloaded from Arrow.com.



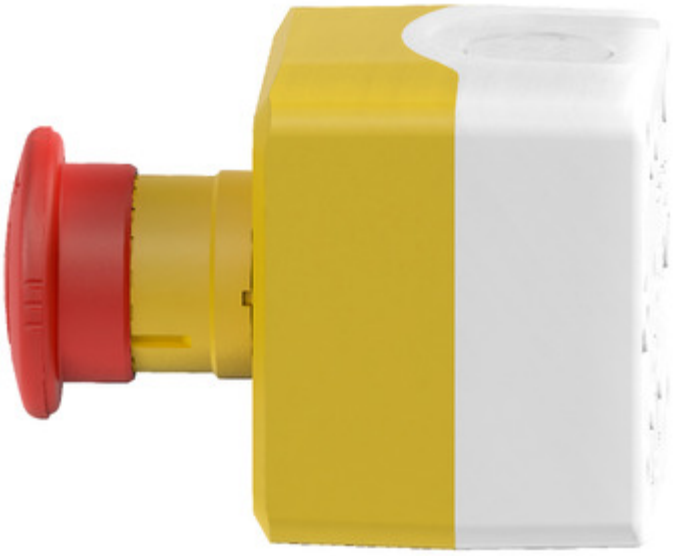

Downloaded from Arrow.com.