400W 5"×3" Low Profile Open Frame Power Supply LOP-400 series

User's Manual
Click Me

UL62368-1
ANSI/AAMI ES60601-1

BS EN/EN62368-1
BS EN/EN60335-1
BS EN/EN61558-1/-2-16
BS EN/EN60601-1

IEC62368-1
IEC60335-1
IEC61558-1/-2-16
IEC60601-1

AS/NZS 61558-1/-2-16

GB4943.1

TPTC004

ECO | Automate | Industrial | Security | Network | Telecom | Household | Medical | 2xMOPP | BF rated

Features

- MEAN WELL Patent Number: ZL 202223277512.1
- 5"×3" compact size with low profile (27.5mm)
- 80~264Vac input with PFC, No load power consumption<0.5W
- Global certificates in multi-fields (ITE 62368-1, Medical 60601-1, Household 60335-1, Industrial 61558-1/-2-16)
- 150%peak load @ 3s
- 250W convection, 400W with FAN 23CFM forced-cooled
- Suitable for Class Ⅰ or Class Ⅱ installations
- Over voltage category Ⅲ (OVC Ⅲ)
- -40 ~ +80℃ wide range operation temperature
- High efficiency up to 95%
- Protections: Short circuit / Overload / Over voltage / Over temperature
- Extremely low leakage current, 2 x MOPP, suitable for BF medical applications
- Operating altitude up to 5000 meters
- Built-in 12V/0.5A for external FAN
- Built-in Remote sense
- 3 years warranty

Applications

- Industrial automation machinery/ control system
- Security system
- Mechanical and electrical equipment
- Electronic instruments, equipments or apparatus
- Network equipment
- Telecom devices
- Power sourcing equipment of PoE
- Home automation
- Medical devices

GTIN CODE

MW Search: https://www.meanwell.com/serviceGTIN.aspx

Description

The LOP-400 is a 400W highly reliable, energy-efficient, low-profile open frame type power supply. With a high power density of 24.6W/in^3 within the standard size of 5" x 3", it features a universal input voltage range of 80~264VAC, making it suitable for global applications. The series offers a comprehensive selection of standard voltages, including 12V/15V/18V/24V/27V/36V/48V/54V, and comes in a complete range of models.

The main features of the LOP-400 include: low standby power (<0.5W), high efficiency (up to 95%), capable of providing 250W under natural air cooling and 400W with an additional fan. It has a 150% @ 3 seconds overload capacity, a wide operating temperature range of -40 to +80°C, compliance with OVCIII, suitable for Class I (with FG) or Class II (without FG) systems. The product has obtained multiple safety certifications, including 62368-1/60601-1/61558-1/60335-1, and is designed to meet 2xMOPP and extremely low touch leakage current <70μA, making it suitable for BF class medical devices. With high product safety and excellent EMC performance, it is versatile and applicable in various fields such as ITE, medical, industrial control, home automation and more. It is a cost-effective slim open frame type power supply.

Model Encoding

LOP - 400 - 12

- 12 — Output voltage (12V/15V/18V/24V/27V/36V/48V/54V)
- 400 — Rated wattage
- LOP — Series name

Downloaded from Arrow.com.

400W 5"×3" Low Profile Open Frame Power Supply

LOP-400 series

SPECIFICATION		LOP-400-12	LOP-400-15	LOP-400-18	LOP-400-24	LOP-400-27	LOP-400-36	LOP-400-48	LOP-400-54
OUT PUT									
DC VOLTAGE		12V	15V	18V	24V	27V	36V	48V	54V
CURRENT	Peak(3sec.)	50A	40A	33.3A	25A	22.2A	16.7A	12.5A	11.1A
	23CFM	33.3A	26.7A	22.2A	16.7A	14.9A	11.2A	8.4A	7.5A
	Convection	20.8A	16.7A	13.9A	10.5A	9.3A	7.1A	5.3A	4.75A
RATED POWER	Peak(3sec.)	600W	600W	599.4W	600W	599.4W	601.2W	600W	599.4W
	23CFM	399.6W	400.5W	399.6W	400.8W	402.3W	403.2W	403.2W	405W
	Convection	249.6W	250.5W	250.2W	252W	251.1W	255.6W	254.4W	256.5W
RIPPLE & NOISE (max.) Note.2		120mVp-p	150mVp-p	180mVp-p	200mVp-p	200mVp-p	250mVp-p	250mVp-p	250mVp-p
VOLTAGE ADJ. RANGE (MAIN OUTPUT)		11.4~12.6V	14.3~15.8V	17.1~18.9V	22.8~25.2V	25.6 ~ 28.4V	34.2 ~37.8V	45.6 ~50.4V	52 ~58V
VOLTAGE TOLERANCE Note.3		±3.0%	±3.0%	±3.0%	±2.0%	±1.0%	±1.0%	±1.0%	±1.0%
LINE REGULATION		±0.5%	±0.5%	±0.5%	±0.5%	±0.5%	±0.5%	±0.5%	±0.5%
LOAD REGULATION		±1.0%	±1.0%	±1.0%	±1.0%	±1.0%	±1.0%	±1.0%	±1.0%
SETUP, RISE TIME		1000ms, 30ms/230Vac 1500ms, 30ms/115Vac at full load							
HOLD UP TIME (Typ.)		30ms@250W load , 16ms@400W load							
INPUT									
VOLTAGE RANGE Note.4		80 ~ 264Vac 113 ~ 370Vdc							
FREQUENCY RANGE		47 ~ 63Hz							
POWER FACTOR		PF>0.95/230Vac PF>0.98/115Vac at full load							
EFFICIENCY (Typ.)		94%	94.5%	95%	94.5%	95%	95%	95%	95%
AC CURRENT (Typ.)		4.2A/115Vac 2.1A/230Vac							
INRUSH CURRENT (Typ.)		COLD START 40A/115Vac 80A/230Vac							
LEAKAGE CURRENT		Class Ⅰ: Earth leakage current < 500 μA(rms) @ 264Vac , touch current < 70 μA(rms) @ 264Vac ClassⅡ: Touch current < 100 μA(rms) @ 264Vac							
PROTECTION									
OVERLOAD		105 ~ 150% rated output power, Protection type : Hiccup after 3 sec, recovers automatically after fault condition is removed							
OVER VOLTAGE		13.2 ~ 15.6V	16.5 ~ 19.5V	19.8 ~ 23.4V	26.4 ~ 31.2V	29.7 ~ 35.1V	39.6 ~ 46.8V	52.8 ~ 62.4V	59.4 ~ 67.5V
		Protection type : Shut down o/p voltage, re-power on to recover							
OVER TEMPERATURE		Protection type : Shut down o/p voltage, recovers automatically after temperature goes down or re-power on to recover							
FUNCTION									
EXTERNAL FAN SUPPLY		12V@0.5A for driving a fan (23CFM) / 12V@0.2A for without fan ; Tolerance -15% ~+15% at main output 20% rated current							
REMOTE SENSE		The remote sensing compensates voltage drop on the load wiring up to 0.5V							
POWER GOOD / POWER FAIL (optional)		500ms>PG>10ms ; The TTL signal goes high with 10ms to 500ms delay after power set up ; The TTL signal goes low at least 1ms before Vo below 90% of rated value ; TTL(0 ~ 1V), TTH(2 ~ 5V)							
ENVIRONMENT									
WORKING TEMP.		-40 ~ +80℃ (Refer to "Derating Curve")							
WORKING HUMIDITY		20 ~ 90% RH non-condensing							
STORAGE TEMP., HUMIDITY		-40 ~ +85℃, 10 ~ 95% RH non-condensing							
TEMP. COEFFICIENT		±0.03%/℃ (0 ~ 50℃)							
VIBRATION		10 ~ 500Hz, 2G 10min./1cycle, 60min. each along X, Y, Z axes							

Downloaded from Arrow.com.

SPECIFICATION	LOP-400-12	LOP-400-15	LOP-400-18	LOP-400-24	LOP-400-27	LOP-400-36	LOP-400-48	LOP-400-54
SAFETY & EMC Note.5								
SAFETY STANDARDS	CB IEC62368-1, IEC60335-1, IEC61558-1/-2-16, IEC60601-1; TUV BS EN/EN62368-1, BS EN/EN60335-1, BS EN/EN61558-1/-2-16, BS EN/EN60601-1(3.2 Version); UL UL62368-1, ANSI / AAMI ES60601-1(3.2 Version) ; CCC GB4943.1 ; RCM AS/NZS 61558-1/-2-16; EAC TPTC 004 approved.							
ISOLATION RESISTANCE	Primary-Secondary: 2xMOPP, Primary-Earth:1xMOPP, Secondary-Earth:1xMOPP							
OVER VOLTAGE CATEGORY	IEC/EN 61558-1/-2-16(OVC Ⅲ, altitude up to 2000M) IEC/EN/UL 62368-1 (OVC Ⅱ, altitude up to 5000M) IEC/EN 60335-1 (OVC Ⅱ, altitude up to 5000M) IEC/EN 60601-1 (OVC Ⅱ, altitude up to 4000M)							
PROTECTIVE EXTRA-LOW VOLTAGE	IEC/EN61558-2-16 (SELV, 12~48V) IEC/EN/UL 62368-1 (SELV / ES1, 12~48V)							
WITHSTAND VOLTAGE	I/P-O/P:4KVac I/P-FG:2KVac O/P-FG:1.5KVac							
ISOLATION RESISTANCE	I/P-O/P, I/P-FG, O/P-FG:100M Ohms / 500VDC / 25℃/ 70% RH							

	Parameter	Standard	Test Level / Note
EMC EMISSION	Conducted & Radiated	BS EN/EN55032(CISPR32) BS EN/EN55011(CISPR11)	Class Ⅰ: Class B , Class Ⅱ: Class A
		BS EN/EN55014(CISPR32)	Class Ⅰ: Class B
	Harmonic Current	BS EN/EN61000-3-2	Class A
	Voltage Flicker	BS EN/EN61000-3-3	-------
EMC IMMUNITY	BS EN/EN55035,BS EN/ EN61000-6-2		
	Parameter	**Standard**	**Test Level /Note**
	ESD	BS EN/EN61000-4-2	Level 4, 15KV air ; Level 4, 8KV contact
	Radiated Susceptibility	BS EN/EN61000-4-3	Level 3, 10V/m(80MHz~2.7GHz) Table 9, 9~28V/m(385MHz~5.78GHz)
	EFT/Burest	BS EN/EN61000-4-4	Level 3, 2KV
	Surge	BS EN/EN61000-4-5	Level 4, 4KV/Line-FG ; 2KV/Line-Line
	Conducted	BS EN/EN61000-4-6	Level 3, 10V
	Magnetic Field	BS EN/EN61000-4-8	Level 4, 30A/m
	Voltage Dips and interruptions	BS EN/EN61000-4-11	>95% dip 0. 5 periods, 100% dip 1 periods, 30% dip 25 periods, >95% interruptions 250 periods

OTHERS	
MTBF	1696.4K hrs min. Telcordia SR-332 (Bellcore) ; 231.2K hrs min. MIL-HDBK-217F (25℃)
DIMENSION	127*76.2*27.5mm (L*W*H)
PACKING	0.39Kg; 24pcs/11.5Kg/1.0CUFT

NOTE

1. All parameters NOT specially mentioned are measured at 230VAC input, rated load and 25℃of ambient temperature.
2. Ripple & noise are measured at 20MHz of bandwidth by using a 12" twisted pair-wire terminated with a 0.1μF & 47μF parallel capacitor.
3. Tolerance : includes set up tolerance, line regulation and load regulation.
4. Derating may be needed under low input voltages. Please check the derating curve for more details.
5. The power supply is considered a component which will be installed into a final equipment. All the EMC tests are been executed by mounting the unit on a 360mm*360mm metal plate with 1mm of thickness. The final equipment must be re-confirmed that it still meets EMC directives. For guidance on how to perform these EMC tests, please refer to "EMI testing of component power supplies." (as available on https://www.meanwell.com//Upload/PDF/EMI_statement_en.pdf)

※ Product Liability Disclaimer : For detailed information, please refer to https://www.meanwell.com/serviceDisclaimer.aspx

Downloaded from Arrow.com.

■ Block Diagram

PFC fosc : 65KHz
PWM fosc : 100KHz

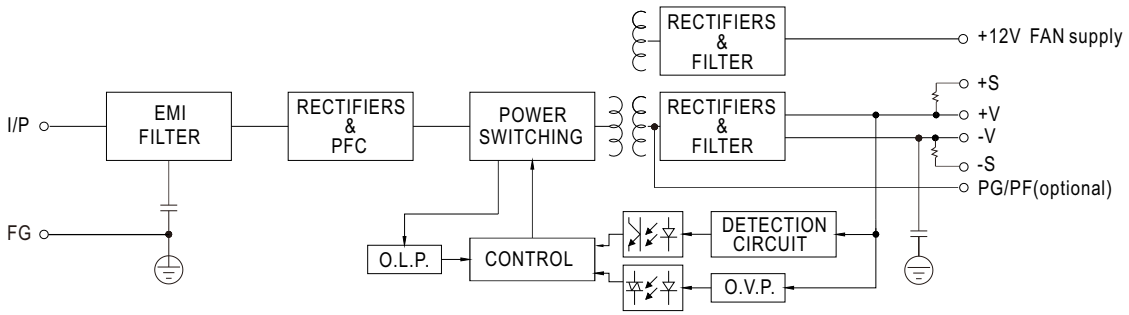

■ Derating Curve

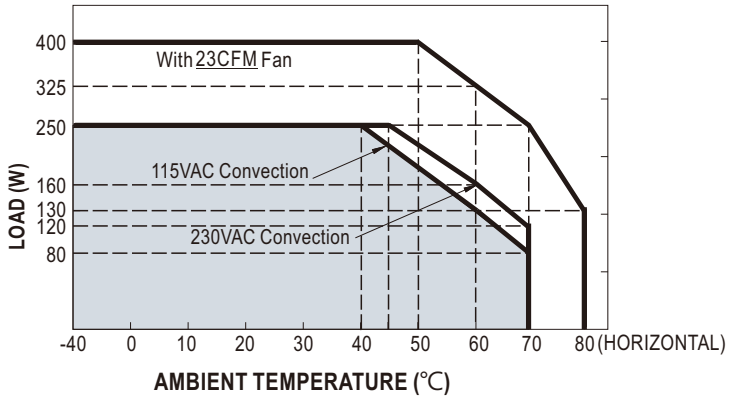

Cooling	Max. Output Power
Free air convection	250W
Force-cooled with external Fan	400W

■ Output Derating VS Input Voltage

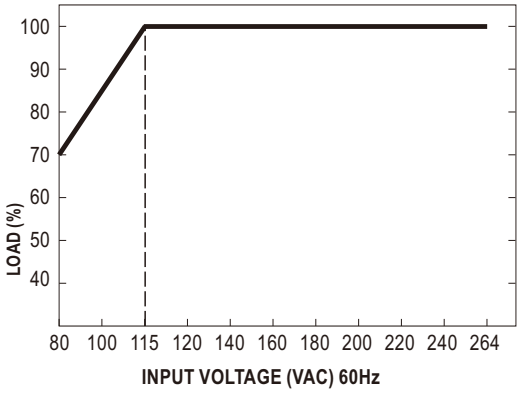

Downloaded from Arrow.com.

■ Mechanical Specification

(Unit: mm , tolerance ± 1mm)

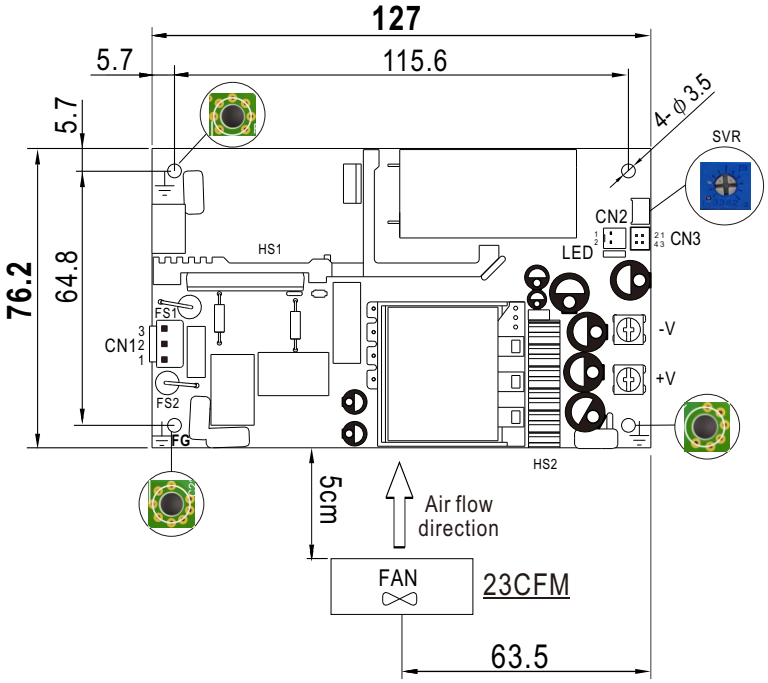

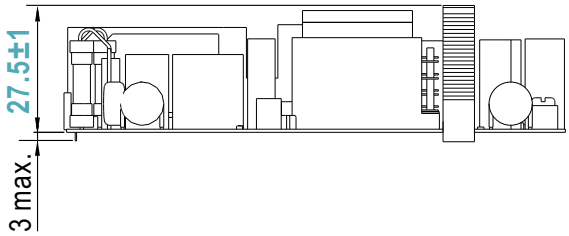

AC Input Connector (CN1) : JST B3P-VH or equivalent

Pin No.	Assignment	Mating Housing	Terminal
1	AC/L	JST VHR or equivalent	JST SVH-21T-P1.1 or equivalent
2	No Pin		
3	AC/N		

DC Output Connector

Assignment	Output Terminals
-V	M3.5 Pan HD screw in 2 positions Torque to 8 lbs-in(90cNm)max.
+V	

FAN Connector(CN2) : TKP 8812-2 or equivalent

Pin No.	Assignment	Mating Housing	Terminal
1	DC COM	TKP 2502 or equivalent	TKP 54T(LF) or equivalent
2	+12Vaux		

Function Connector(CN3): TKP DH2I-2X2 or equivalent

Pin No.	Assignment	Mating Housing	Terminal
1	-R.S	TKP DH2 or equivalent	TKP or equivalent
2	+R.S		
3	DC COM		
4	PG(optional)		

Note:

1. Class Ⅰ System: Mounting holes marked with ⏚ have to be connected to safety earth.
2. Class Ⅱ System: Unnecessary to connect with safety earth.
3. Recommend Screw Size for installation:

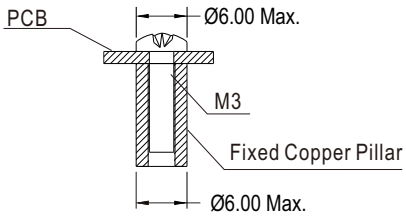

⚠ HS1,HS2 cannot be shorted

■ Installation Manual

Please refer to : http://www.meanwell.com/manual.html

Downloaded from Arrow.com.