FAIRCHILD™

Is Now Part of

ON

ON Semiconductor®

To learn more about ON Semiconductor, please visit our website at
www.onsemi.com

Please note: As part of the Fairchild Semiconductor integration, some of the Fairchild orderable part numbers will need to change in order to meet ON Semiconductor's system requirements. Since the ON Semiconductor product management systems do not have the ability to manage part nomenclature that utilizes an underscore (_), the underscore (_) in the Fairchild part numbers will be changed to a dash (-). This document may contain device numbers with an underscore (_). Please check the ON Semiconductor website to verify the updated device numbers. The most current and up-to-date ordering information can be found at www.onsemi.com. Please email any questions regarding the system integration to Fairchild_questions@onsemi.com.

ON Semiconductor and the ON Semiconductor logo are trademarks of Semiconductor Components Industries, LLC dba ON Semiconductor or its subsidiaries in the United States and/or other countries. ON Semiconductor owns the rights to a number of patents, trademarks, copyrights, trade secrets, and other intellectual property. A listing of ON Semiconductor's product/patent coverage may be accessed at www.onsemi.com/site/pdf/Patent-Marking.pdf. ON Semiconductor reserves the right to make changes without further notice to any products herein. ON Semiconductor makes no warranty, representation or guarantee regarding the suitability of its products for any particular purpose, nor does ON Semiconductor assume any liability arising out of the application or use of any product or circuit, and specifically disclaims any and all liability, including without limitation special, consequential or incidental damages. Buyer is responsible for its products and applications using ON Semiconductor products, including compliance with all laws, regulations and safety requirements or standards, regardless of any support or applications information provided by ON Semiconductor. "Typical" parameters which may be provided in ON Semiconductor data sheets and/or specifications can and do vary in different applications and actual performance may vary over time. All operating parameters, including "Typicals" must be validated for each customer application by customer's technical experts. ON Semiconductor does not convey any license under its patent rights nor the rights of others. ON Semiconductor products are not designed, intended, or authorized for use as a critical component in life support systems or any FDA Class 3 medical devices or medical devices with a same or similar classification in a foreign jurisdiction or any devices intended for implantation in the human body. Should Buyer purchase or use ON Semiconductor products for any such unintended or unauthorized application, Buyer shall indemnify and hold ON Semiconductor and its officers, employees, subsidiaries, affiliates, and distributors harmless against all claims, costs, damages, and expenses, and reasonable attorney fees arising out of, directly or indirectly, any claim of personal injury or death associated with such unintended or unauthorized use, even if such claim alleges that ON Semiconductor was negligent regarding the design or manufacture of the part. ON Semiconductor is an Equal Opportunity/Affirmative Action Employer. This literature is subject to all applicable copyright laws and is not for resale in any manner.

Downloaded from Arrow.com.

July 2013

FSA110 — Audio and Wired-OR USB2.0 Hi-Speed (480Mbps) Switch with Negative Signal Capability and Built-in Termination

Features

- 6pF Typical Switch Off Capacitance for HS USB
- 2.5Ω Typical On Resistance for Audio Signaling
- Negative-Swing-Capable Audio Channel
- Automatic USB Detection Available
- Power-Off Protection on the D+/R, D-/L Ports
- Flow-Through Pin Out Eliminates PCB Vias
- Built-In Termination on Unselected Audio Paths Inhibits Audio Pop

Applications

- Cell Phone, PDA, Digital Camera, and Notebook
- LCD Monitor, TV, and Set-Top Box

Description

The FSA110 is a Double-Pole, Single Throw (DPST) switch that combines a low-distortion audio path with low off capacitance for USB applications. This configuration is ideal for wired-OR configurations, enabling shared USB2.0 Hi-Speed (HS) and audio on a single connector. The architecture is designed to allow audio signals to swing below ground so a common USB and headphone jack can be used for personal media players and portable peripheral devices.

The FSA110 is configured for default USB transfer, which gives the user control of when the audio path is enabled. The audio path defaults to audio mute and is enabled with /OE. The FSA110 includes a power-off feature on the common port when V_{CC}=0V to guarantee signal isolation.

IMPORTANT NOTE:

For additional performance information, please contact analogswitch@fairchildsemi.com.

Ordering Information

Part Number	Top Mark	Eco Status	Package Description
FSA110K8X	A110	Green	8-Lead US8, JEDEC MO-187, Variation CA, 3.0mm Wide Package
FSA110UMX	GZ	Green	10-Lead Quad, Ultrathin MLP, 1.4 x 1.8mm

For Fairchild's definition of Eco Status, please visit: http://www.fairchildsemi.com/company/green/rohs_green.html

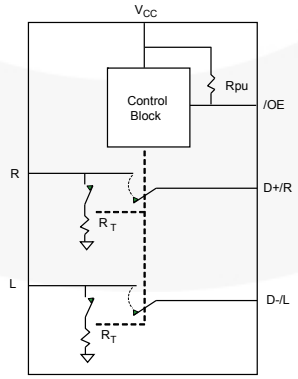

Figure 1. Analog Symbol

Downloaded from Arrow.com.

Pin Configuration

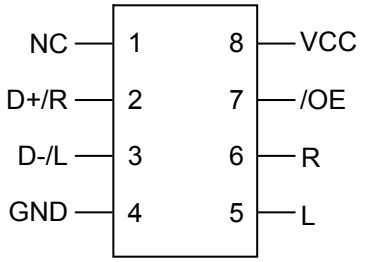

Figure 2. 8-Lead US8

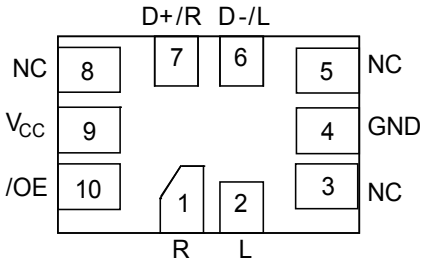

Figure 3. 10-Pin UMLP

Pin Descriptions

Name	Description
V_{CC}	Power supply.
/OE	Output enable. This pin defaults HIGH, allowing the user to mute the audio channel during power up. The audio path is only connected when /OE is driven LOW. The switch defaults to USB mode.
R, L	Audio right and left input sources.
D+/R, D-/L	USB and audio common connector port.

Truth Table

V_{CC}	/OE[1]	Audio Mode	USB Mode
LOW	-	OFF	ON
HIGH	LOW	ON	OFF
-	HIGH	OFF	ON

Note:
1. /OE- Internal pull-up resistor to V_{CC} provides a default USB connection. /OE must be driven LOW to activate the audio path.

Downloaded from Arrow.com.

Functional Description

The FSA110 is a combined USB and audio switch that enables sharing the D+/D- lines of a USB connector with stereo audio CODEC outputs. The /OE pin has an internal pull-up resistor, which results in a default USB mode configuration. This configuration provides built-in mute on the audio path during system power-up and in default USB mode allows the system to transmit USB data regardless of the switch V_{CC} supply. This configuration allows the user to override the USB default state and send analog audio on the USB path when the USB cable is connected. In such a configuration, there is no need for auto USB detection. The audio switch path is capable of handling negative signals, eliminating the need for large coupling capacitors and greatly reducing the potential for audio pop. Termination resistors on the audio R, L ports are enabled when the switch is in USB mode; which reduces the incidence of audio pop when enabling the audio path.

Application Diagram

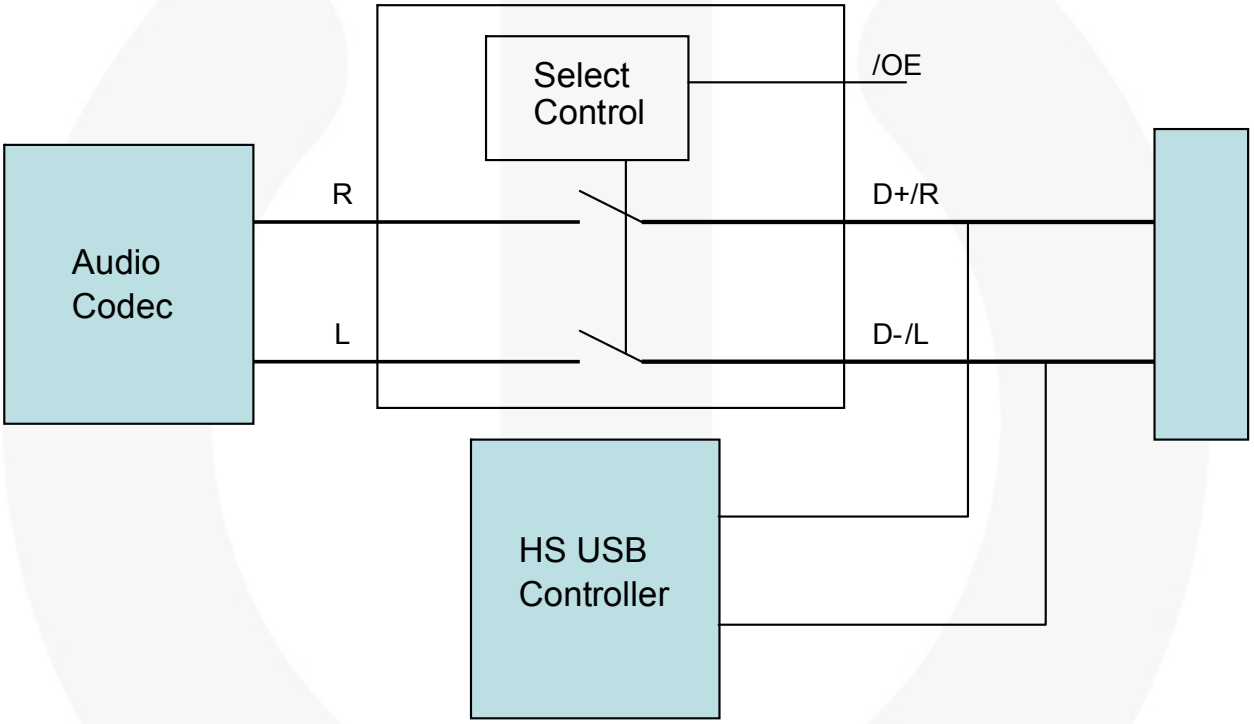

Figure 4. Typical Application Diagram

Downloaded from Arrow.com.

Absolute Maximum Ratings

Stresses exceeding the absolute maximum ratings may damage the device. The device may not function or be operable above the recommended operating conditions and stressing the parts to these levels is not recommended. In addition, extended exposure to stresses above the recommended operating conditions may affect device reliability. The absolute maximum ratings are stress ratings only.

Symbol	Parameter		Min.	Max.	Units
V_{CC}	Supply Voltage		-0.5	4.6	V
/OE	Output Enable Control Signal		-0.5	4.6	V
V_{SW}	Switch I/O Voltage[2]	USB Path Active	-1.0	4.6	V
		Audio Path Active	V_{CC}–4.6	4.6	V
I_{IK}	Input Clamp Diode Current			- 50	mA
I_{SW}	Switch I/O Current (Continuous)	Audio		100	mA
I_{SWPEAK}	Peak Switch Current (Pulsed at 1ms Duration, <10% Duty Cycle)	Audio		150	mA
T_{STG}	Storage Temperature Range		-65	+150	°C
T_J	Maximum Junction Temperature			+150	°C
T_L	Lead Temperature (Soldering, 10 seconds)			+260	°C
ESD	Human Body Model (JEDEC: JESD22-A114)	I/O to GND	12		kV
		All Other Pins	2		
		V_{CC} to GND	12		
	Charged Discharge Model (JEDEC: JESD22-C101)		2		

Note:
2. The input and output negative ratings may be exceeded if the input and output diode current ratings are observed.

Recommended Operating Conditions

The Recommended Operating Conditions table defines the conditions for actual device operation. Recommended operating conditions are specified to ensure optimal performance to the datasheet specifications. Fairchild does not recommend exceeding them or designing to Absolute Maximum Ratings.

Symbol	Parameter		Min.	Max.	Units
V_{CC}	Supply Voltage		2.7	4.3	V
/OE	Output Enable Control Signal		3.0	4.3	V
V_{SW}	Switch I/O Voltage	USB Path Active	0V	4.3	V
		Audio Path Active	V_{cc}-4.3	4.3	V
T_A	Operating Temperature		-40	+85	°C

Downloaded from Arrow.com.

DC Electrical Characteristics

All typical values are at 25ºC unless otherwise specified.

Symbol	Parameter	V_{CC} (V)	Conditions	T_A = -40 to +85°C			Unit
				Min.	Typ.[6]	Max.	
Common Pins							
V_{IK}	Clamp Diode Voltage	3.0	I_{IK} = -18mA			-1.2	V
V_{IH}	Control Input Voltage HIGH	2.7 to 4.3		1.7			
V_{IL}	Control Input Voltage LOW	2.7 to 4.3				0.6	
			V_{IN} = 4.3V	1		-1	
I_{OFF}	Power Off Leakage Current (Common Port Only D+/R, D-/L)	0	Common Port (D+/R, D-/L) V_{SW} = 4.3V or Floating	-10		10	µA
$I_{NC(ON)}$	On-Leakage Current of Port D+/R or D-/L	4.3	D+/R, D-/L = 0.3V, 4.0V D+, D-, R, L = Floating Figure 10	-250	1	250	nA
$R_{Pu,}$	/OE Internal Pull-Up Resistor	4.3			3		MΩ
R_T	Audio Path Termination Resistors	4.3	V_{IN}=0.3V or 4.0V		100		Ω
Audio Switch Path							
V_{Audio}	Audio Analog Signal Range	2.7 to 4.3		V_{CC}-4.3V		V_{CC}	V
$R_{ONAudio}$	Audio Switch On Resistance[3]	2.7	$V_{L/R}$ = -1.5V, 0V,1.5V I_{ON} = 60ma		1.5	3.0	Ω
$\Delta R_{ONAudio}$	Audio Delta R_{ON}[4]	2.7	$V_{L/R}$ = 0.7V I_{ON} = 60mA		0.4		Ω
$R_{FLAT(Audio)}$	Audio R_{ON} Flatness[5]	2.7	V_{SW}=-1.5V to 1.5V I_{ON} = 60mA		0.4	0.8	Ω
Power Supply							
I_{CC}	Quiescent Supply Current	4.3	/OE = Low or V_{CC}, I_{OUT} = 0		1.5	15	µA

Notes:

3. On resistance is determined by the voltage drop between the A and B pins at the indicated current through the switch.
4. $\Delta R_{ON} = R_{ON\ max} - R_{ON\ min}$ measured at identical V_{CC}, temperature, and voltage. Worst-case signal path, audio or USB channel, is characterized.
5. Flatness is defined as the difference between the maximum and minimum values of on resistance over the specified range of conditions.
6. Guaranteed by characterization; not production tested.

Downloaded from Arrow.com.

AC Electrical Characteristics

All typical value are for V_{CC} = 3.6V at 25ºC unless otherwise specified.

Symbol	Parameter	V_{CC} (V)	Conditions	T_A = - 40 to +85°C			Unit
				Min.	Typ.[7]	Max.	
t_{ON}	Turn-On Time, /OE to Output	2.7 to 4.3	$V_{D+/R, D-/L}$ = 1.0V R_L = 50Ω, C_L = 50Pf Figure 11, Figure 12, Figure 13		2		µs
t_{OFF}	Turn-Off Time, /OE to Output	2.7 to 4.3	$V_{D+/R, D-/L}$ = 1.0V R_L = 50Ω, C_L = 50pF Figure 11, Figure 12, Figure 13		2		µs
Xtalk	Non-Adjacent Channel Crosstalk (Audio Mode)	3.3 to 4.3	f = 20kHz, R_T = 32Ω, C_L = 0pF Figure 18		-75		dB
THD	Total Harmonic Distortion (Audio Mode)	3.0 to 4.3	f = 20Hz to 20 kHz R_L = 32Ω, V_{IN} = $2V_{pp}$ Figure 16		0.05		%
SNR	Signal-to-Noise Ratio (Audio Mode)	3.3 to 4.3	f = 20kHz to 20kHz, R_L = 32Ω, V_{IN} = $2V_{PP}$ Figure 16		80		dB

Note:
7. Guaranteed by characterization; not production tested.

Capacitance

All typical values are at 25ºC unless otherwise specified.

Symbol	Parameter	V_{CC} (V)	Conditions	T_A = - 40 to +85°C			Unit
				Min.	Typ.[8]	Max.	
C_{IN}	Control Pin Input Capacitance	3.0 to 4.3	V_{BIAS} = 0.2V		2.5		pF
C_{OFF}	Switch Off Capacitance	3.0 to 4.3	f = 240MHz Figure 14		6.0		pF

Note:
8. Guaranteed by characterization; not production tested.

Downloaded from Arrow.com.

Typical Characteristics

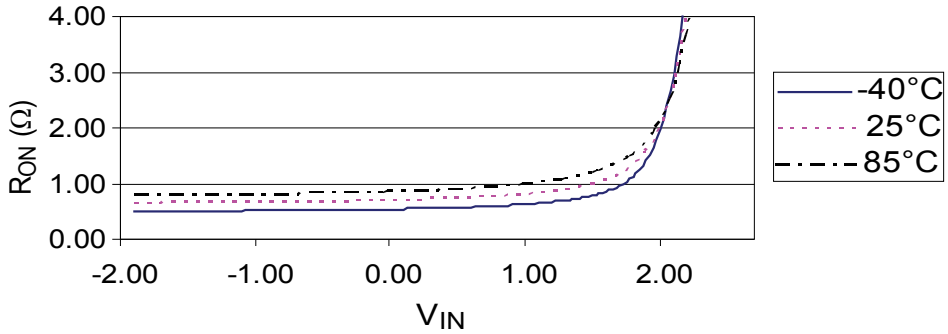

Figure 5. R_{ON} Audio, V_{CC}=2.7V

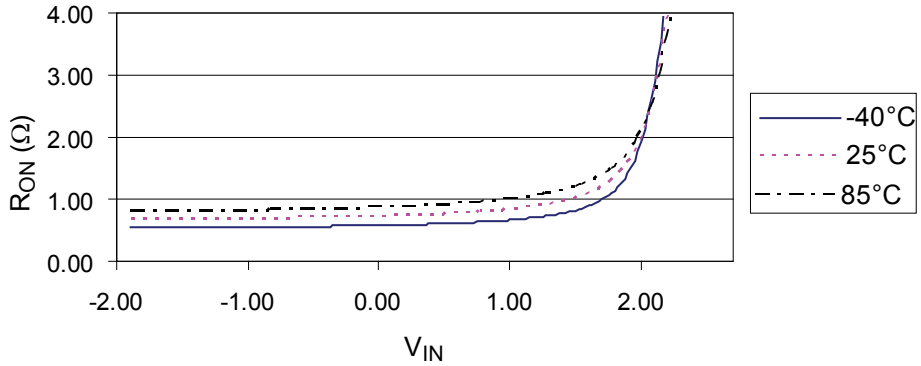

Figure 6. R_{ON} Audio, V_{CC}=2.7V

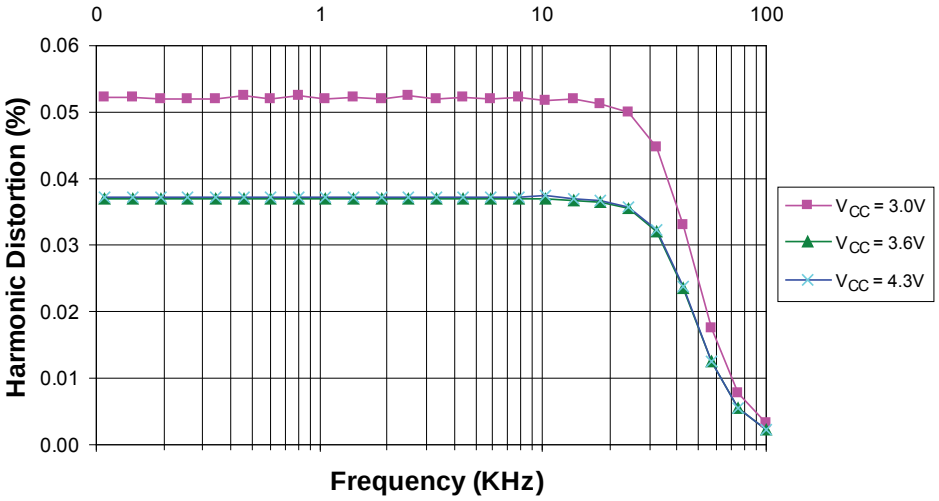

Figure 7. Total Harmonic Distortion

Downloaded from Arrow.com.

Test Diagrams

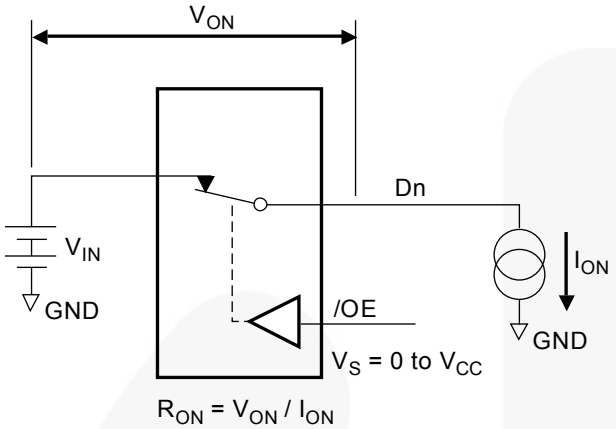

Figure 8. On Resistance

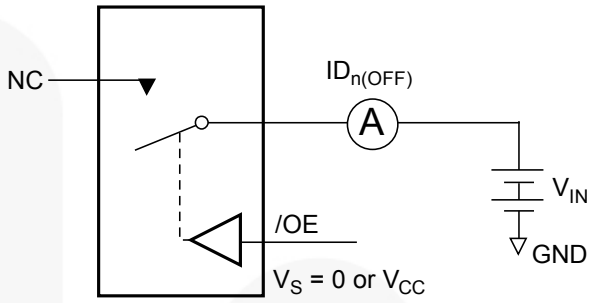

Each switch port is tested separately.

Figure 9. Off Leakage

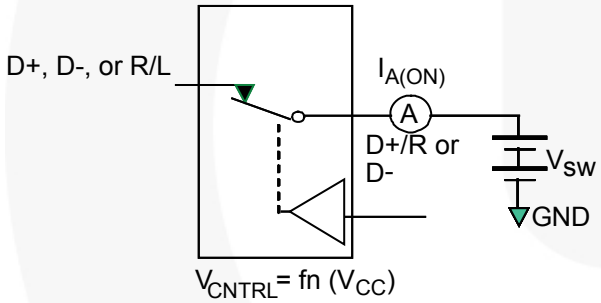

Figure 10. On Leakage

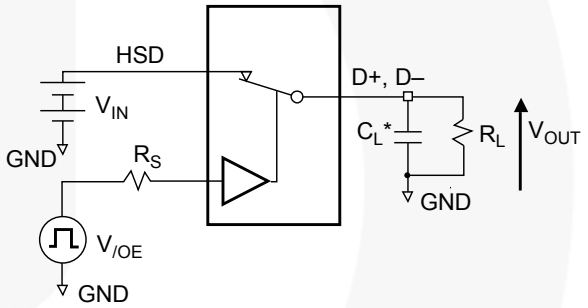

R_L, R_S, and C_L are functions of the application environment (see tables for specific values).

*C_L includes test fixture and stray capacitance.

Figure 11. AC Test Circuit Load

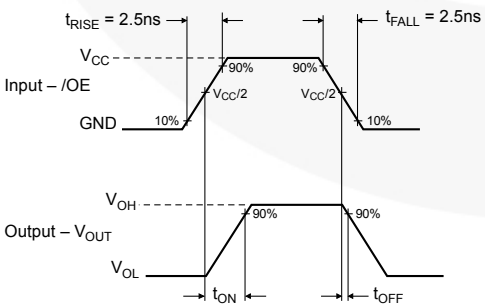

Figure 12. Turn-On / Turn-Off Waveforms

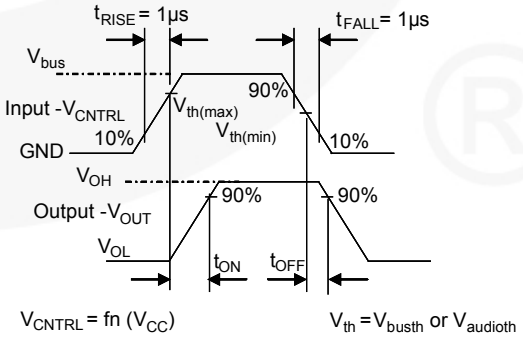

Figure 13. Turn-On / Turn-Off Waveforms

Downloaded from Arrow.com.

Test Diagrams (Continued)

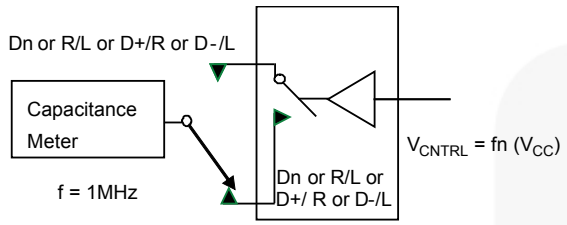

Figure 14. Channel Off Capacitance

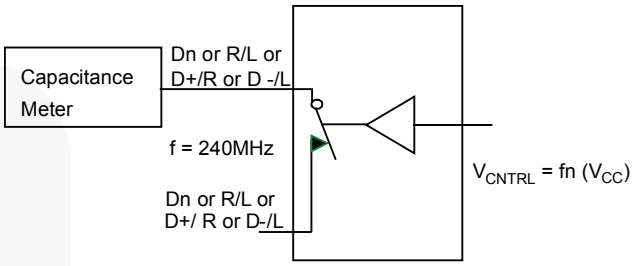

Figure 15. Channel On Capacitance

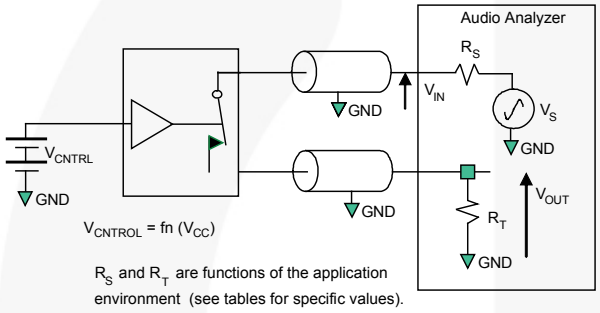

Figure 16. Total Harmonic Distortion

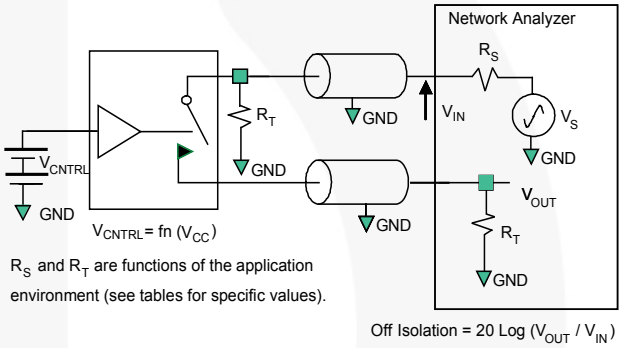

Figure 17. Channel Off Isolation

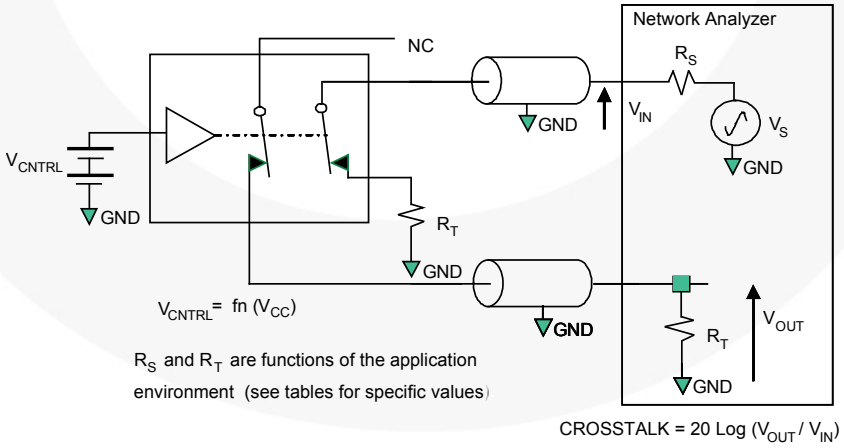

Figure 18. Non-Adjacent Channel-to-Channel Crosstalk

Downloaded from Arrow.com.

Physical Dimensions

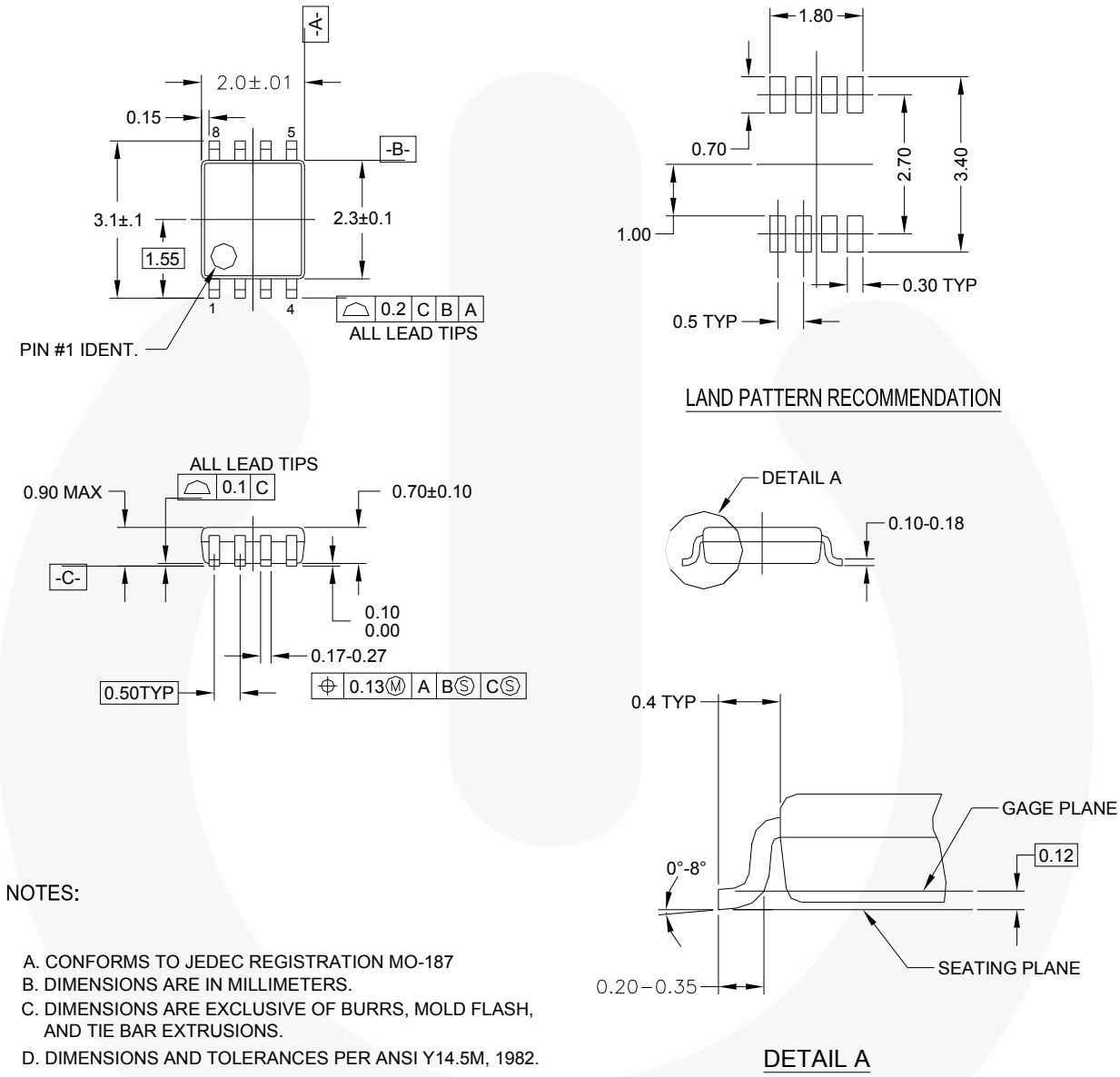

NOTES:

A. CONFORMS TO JEDEC REGISTRATION MO-187
B. DIMENSIONS ARE IN MILLIMETERS.
C. DIMENSIONS ARE EXCLUSIVE OF BURRS, MOLD FLASH, AND TIE BAR EXTRUSIONS.
D. DIMENSIONS AND TOLERANCES PER ANSI Y14.5M, 1982.

MAB08AREVC

Figure 19. 8-Lead US8, JEDEC MO-187, Variation CA, 3.0mm Wide Package

Package drawings are provided as a service to customers considering Fairchild components. Drawings may change in any manner without notice. Please note the revision and/or date on the drawing and contact a Fairchild Semiconductor representative to verify or obtain the most recent revision. Package specifications do not expand the terms of Fairchild's worldwide terms and conditions, specifically the warranty therein, which covers Fairchild products.

Always visit Fairchild Semiconductor's online packaging area for the most recent package drawings:

http://www.fairchildsemi.com/packaging/

Downloaded from Arrow.com.

Physical Dimensions

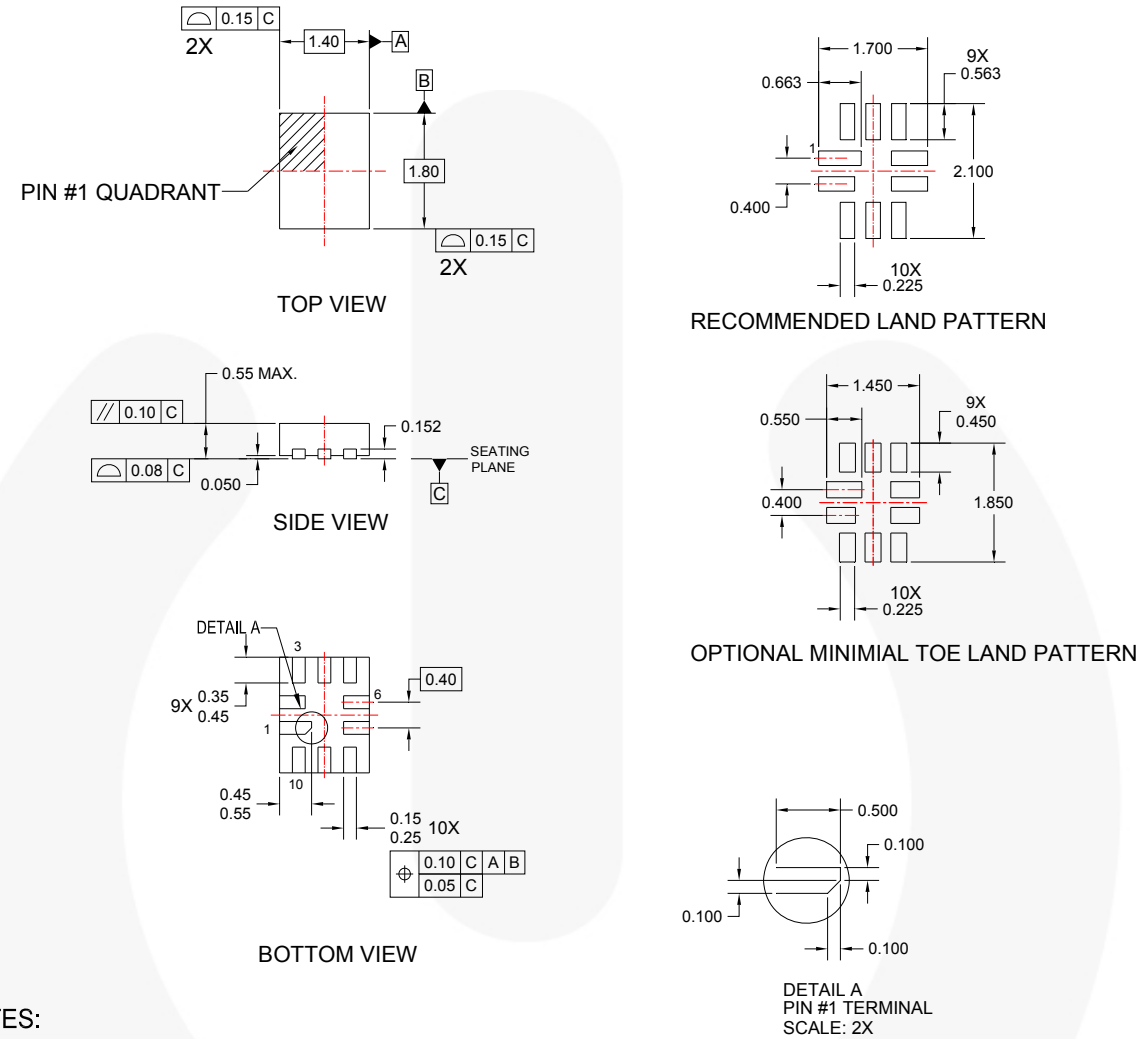

NOTES:

A. DIMENSIONS ARE IN MILLIMETERS.

B. DIMENSIONS AND TOLERANCES PER ASME Y14.5M, 1994

C. DRAWING FILENAME: UMLP10Arev2

Figure 20. 10-Lead Quad Ultrathin Molded Leadless Package (MLP)

Package drawings are provided as a service to customers considering Fairchild components. Drawings may change in any manner without notice. Please note the revision and/or date on the drawing and contact a Fairchild Semiconductor representative to verify or obtain the most recent revision. Package specifications do not expand the terms of Fairchild's worldwide terms and conditions, specifically the warranty therein, which covers Fairchild products.

Always visit Fairchild Semiconductor's online packaging area for the most recent package drawings:

http://www.fairchildsemi.com/packaging/

Downloaded from Arrow.com.

FAIRCHILD SEMICONDUCTOR®

TRADEMARKS

The following includes registered and unregistered trademarks and service marks, owned by Fairchild Semiconductor and/or its global subsidiaries, and is not intended to be an exhaustive list of all such trademarks.

AccuPower™
Auto-SPM™
Build it Now™
CorePLUS™
CorePOWER™
CROSSVOLT™
CTL™
Current Transfer Logic™
EcoSPARK®
EfficientMax™
EZSWITCH™*
EZ™*
DEUXPEED™
F®
Fairchild®
Fairchild Semiconductor®
FACT Quiet Series™
FACT®
FAST®
FastvCore™
FETBench™
FlashWriter®*
FPS™
F-PFS™
FRFET®
Global Power Resource℠
Green FPS™
Green FPS™ e-Series™
Gmax™
GTO™
IntelliMAX™
ISOPLANAR™
MegaBuck™
MICROCOUPLER™
MicroFET™
MicroPak™
MillerDrive™
MotionMax™
Motion-SPM™
OPTOLOGIC®
OPTOPLANAR®
®
PDP SPM™
Power-SPM™
PowerTrench®
PowerXS™
Programmable Active Droop™
QFET®
QS™
Quiet Series™
RapidConfigure™
™
Saving our world, 1mW/W/kW at a time™
SignalWise™
SmartMax™
SMART START™
SPM®
STEALTH™
SuperFET™
SuperSOT™-3
SuperSOT™-6
SuperSOT™-8
SupreMOS™
SyncFET™
Sync-Lock™
SYSTEM GENERAL®*
The Power Franchise®
the power franchise
TinyBoost™
TinyBuck™
TinyCalc™
TinyLogic®
TINYOPTO™
TinyPower™
TinyPWM™
TinyWire™
TriFault Detect™
TRUECURRENT™*
µSerDes™
µSerDes™
UHC®
Ultra FRFET™
UniFET™
VCX™
VisualMax™
XS™

* Trademarks of System General Corporation, used under license by Fairchild Semiconductor.

DISCLAIMER

FAIRCHILD SEMICONDUCTOR RESERVES THE RIGHT TO MAKE CHANGES WITHOUT FURTHER NOTICE TO ANY PRODUCTS HEREIN TO IMPROVE RELIABILITY, FUNCTION, OR DESIGN. FAIRCHILD DOES NOT ASSUME ANY LIABILITY ARISING OUT OF THE APPLICATION OR USE OF ANY PRODUCT OR CIRCUIT DESCRIBED HEREIN; NEITHER DOES IT CONVEY ANY LICENSE UNDER ITS PATENT RIGHTS, NOR THE RIGHTS OF OTHERS. THESE SPECIFICATIONS DO NOT EXPAND THE TERMS OF FAIRCHILD'S WORLDWIDE TERMS AND CONDITIONS, SPECIFICALLY THE WARRANTY THEREIN, WHICH COVERS THESE PRODUCTS.

LIFE SUPPORT POLICY

FAIRCHILD'S PRODUCTS ARE NOT AUTHORIZED FOR USE AS CRITICAL COMPONENTS IN LIFE SUPPORT DEVICES OR SYSTEMS WITHOUT THE EXPRESS WRITTEN APPROVAL OF FAIRCHILD SEMICONDUCTOR CORPORATION.

As used herein:

1. Life support devices or systems are devices or systems which, (a) are intended for surgical implant into the body or (b) support or sustain life, and (c) whose failure to perform when properly used in accordance with instructions for use provided in the labeling, can be reasonably expected to result in a significant injury of the user.
2. A critical component in any component of a life support, device, or system whose failure to perform can be reasonably expected to cause the failure of the life support device or system, or to affect its safety or effectiveness.

ANTI-COUNTERFEITING POLICY

Fairchild Semiconductor Corporation's Anti-Counterfeiting Policy. Fairchild's Anti-Counterfeiting Policy is also stated on our external website, www.fairchildsemi.com, under Sales Support.

Counterfeiting of semiconductor parts is a growing problem in the industry. All manufacturers of semiconductor products are experiencing counterfeiting of their parts. Customers who inadvertently purchase counterfeit parts experience many problems such as loss of brand reputation, substandard performance, failed applications, and increased cost of production and manufacturing delays. Fairchild is taking strong measures to protect ourselves and our customers from the proliferation of counterfeit parts. Fairchild strongly encourages customers to purchase Fairchild parts either directly from Fairchild or from Authorized Fairchild Distributors who are listed by country on our web page cited above. Products customers buy either from Fairchild directly or from Authorized Fairchild Distributors are genuine parts, have full traceability, meet Fairchild's quality standards for handling and storage and provide access to Fairchild's full range of up-to-date technical and product information. Fairchild and our Authorized Distributors will stand behind all warranties and will appropriately address any warranty issues that may arise. Fairchild will not provide any warranty coverage or other assistance for parts bought from Unauthorized Sources. Fairchild is committed to combat this global problem and encourage our customers to do their part in stopping this practice by buying direct or from authorized distributors.

PRODUCT STATUS DEFINITIONS

Definition of Terms

Datasheet Identification	Product Status	Definition
Advance Information	Formative / In Design	Datasheet contains the design specifications for product development. Specifications may change in any manner without notice.
Preliminary	First Production	Datasheet contains preliminary data; supplementary data will be published at a later date. Fairchild Semiconductor reserves the right to make changes at any time without notice to improve design.
No Identification Needed	Full Production	Datasheet contains final specifications. Fairchild Semiconductor reserves the right to make changes at any time without notice to improve the design.
Obsolete	Not In Production	Datasheet contains specifications on a product that is discontinued by Fairchild Semiconductor. The datasheet is for reference information only.

Rev. I43

Downloaded from Arrow.com.

ON Semiconductor and ON are trademarks of Semiconductor Components Industries, LLC dba ON Semiconductor or its subsidiaries in the United States and/or other countries. ON Semiconductor owns the rights to a number of patents, trademarks, copyrights, trade secrets, and other intellectual property. A listing of ON Semiconductor's product/patent coverage may be accessed at www.onsemi.com/site/pdf/Patent−Marking.pdf. ON Semiconductor reserves the right to make changes without further notice to any products herein. ON Semiconductor makes no warranty, representation or guarantee regarding the suitability of its products for any particular purpose, nor does ON Semiconductor assume any liability arising out of the application or use of any product or circuit, and specifically disclaims any and all liability, including without limitation special, consequential or incidental damages. Buyer is responsible for its products and applications using ON Semiconductor products, including compliance with all laws, regulations and safety requirements or standards, regardless of any support or applications information provided by ON Semiconductor. "Typical" parameters which may be provided in ON Semiconductor data sheets and/or specifications can and do vary in different applications and actual performance may vary over time. All operating parameters, including "Typicals" must be validated for each customer application by customer's technical experts. ON Semiconductor does not convey any license under its patent rights nor the rights of others. ON Semiconductor products are not designed, intended, or authorized for use as a critical component in life support systems or any FDA Class 3 medical devices or medical devices with a same or similar classification in a foreign jurisdiction or any devices intended for implantation in the human body. Should Buyer purchase or use ON Semiconductor products for any such unintended or unauthorized application, Buyer shall indemnify and hold ON Semiconductor and its officers, employees, subsidiaries, affiliates, and distributors harmless against all claims, costs, damages, and expenses, and reasonable attorney fees arising out of, directly or indirectly, any claim of personal injury or death associated with such unintended or unauthorized use, even if such claim alleges that ON Semiconductor was negligent regarding the design or manufacture of the part. ON Semiconductor is an Equal Opportunity/Affirmative Action Employer. This literature is subject to all applicable copyright laws and is not for resale in any manner.

PUBLICATION ORDERING INFORMATION

LITERATURE FULFILLMENT:
Literature Distribution Center for ON Semiconductor
19521 E. 32nd Pkwy, Aurora, Colorado 80011 USA
Phone: 303−675−2175 or 800−344−3860 Toll Free USA/Canada
Fax: 303−675−2176 or 800−344−3867 Toll Free USA/Canada
Email: orderlit@onsemi.com

N. American Technical Support: 800−282−9855 Toll Free USA/Canada
Europe, Middle East and Africa Technical Support:
Phone: 421 33 790 2910
Japan Customer Focus Center
Phone: 81−3−5817−1050

ON Semiconductor Website: **www.onsemi.com**

Order Literature: http://www.onsemi.com/orderlit

For additional information, please contact your local Sales Representative

Downloaded from Arrow.com.