NMC-P Series

Surface Mount Multilayer Ceramic Capacitors

ROHS/REACH COMPLIANT HALOGEN FREE

NIC COMPONENTS
Performance Passives By Design

FEATURES

- CRACK RESISTANT TERMINATION
- SOFT TERMINATION, OPEN MODE FAILURE
- WIDE VOLTAGE RANGE (6.3V TO 5KV)
- HIGH CAPACITANCE (UP TO 10µF)
- RoHS COMPLIANT
- SAC SOLDER COMPATIBLE*

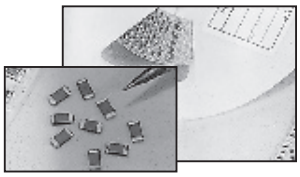

SPECIFICATIONS

Temperature Coefficient	NPO	X7R	X5R
Capacitance Range	0.1pF ~ 0.22µF	100pF ~ 10µF	33,000pF ~ 10µF
Capacitance Tolerance	For 0.1pF ~ 9.1pF: ±0.1pF (B), ±0.25pF (C), ±0.5pF (D), ±1% (F) **10pF and above: ±1% (F), ±2% (G), ±5% (J), ±10% (K)	±10% (K) ±20% (M)	±10% (K) ±20% (M)
Operating Temperature Range	-55°C ~ +125°C		-55°C ~ +85°C
Temperature Characteristics	±30ppm/°C	±15% Δ Cap.	±15% Δ Cap.
Rated Voltages	6.3Vdc ~ 5KVdc	6.3Vdc ~ 3KVdc	6.3Vdc ~ 25Vdc
Q or Dissipation Factor	Q = ≥ 1000 (more then 30pF)*** Q = ≥ 400 + 20 x C in pF (30pF and below)***	Dissipation Factor 1KHz, 1.0V ± 0.2Vrms (See Values & Sizes Tables)	
Insulation Resistance	NPO 10,000Megohm or 500Megohm/µF whichever is less @ +25°C	See Tables on Pages 21 ~ 25	
Dielectric Withstanding Voltage	250% of rated voltage for 5 seconds, 50mA max. (6.3V ~ 100V) 200% of rated voltage for 5 seconds, 50mA max. (200V ~ 250V) 120% of rated voltage for 5 seconds, 50mA max. (400V ~ 450V) 150% of rated voltage for 5 seconds, 50mA max. (500V ~ 630V) 120% of rated voltage for 5 seconds, 50mA max. (1KV ~ 3KV) 110% of rated voltage for 5 seconds, 50mA max. (4KV)		

*Reflow soldering allowed for all case sizes. Contact NIC for wave soldering restrictions
**Contact NIC regarding available tolerances for NPO parts above 0.01µF
***Test Frequency & Voltage: Up to 100pF 1MHz/1.0Vrms, Above 100pF 1KHz/1.0Vrms

PART NUMBER SYSTEM

NMC-P 1206 X7R 105 K 50 TRP or TRPLP F

- F — RoHS Compliant
- TRPLP — Tape & Reel (Plastic Carrier)
- TRP — Tape & Reel (Punched Carrier)
- 50 — Voltage (Vdc)
- K — Capacitance Tolerance Code (see chart)
- 105 — Capacitance Code, expressed in pF, first 2 digits are significant, 3rd digit is no. of zeros
- X7R — Temperature Characteristic (NPO or X7R)
- 1206 — Size Code (see chart)
- NMC-P — Series

FLEXIBLE CONSTRUCTION

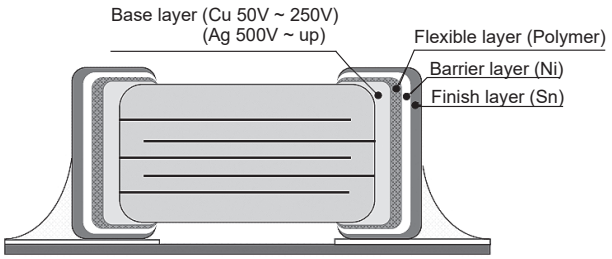

STANDARD CONSTRUCTION
OPEN MODE FAILURE AS A RESULT OF BENDING STRESS

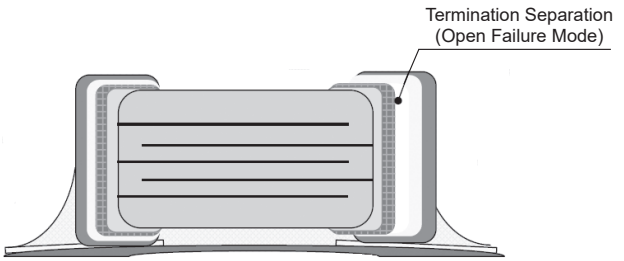

Downloaded from Arrow.com.

NMC-P Series

Surface Mount Multilayer Ceramic Capacitors

ROHS/REACH COMPLIANT HALOGEN FREE

NIC COMPONENTS
Performance Passives By Design

NPO VALUES AND SIZES (mm)

EIA Case Size	0402					0603						
Length (L)	1.00 ± 0.2					1.60 ± 0.1						
Width (W)	0.50 ± 0.2					0.80 ± 0.1						
Thickness max. (T)	0.70 max.					1.10 max.						
Termination Width (P)	0.15 min.					0.15 min.						
Capacitance	Working Voltage (Vdc)											
	10	16	25	50	100	10	16	25	50	100	200	250
0.1pF												
0.2												
0.3												
0.4												
0.5												
1.0												
1.2												
1.5												
1.8												
2.0												
2.2												
2.7												
3.0												
3.3												
3.9												
4.0												
4.7												
5.0												
5.6												
6.0												
6.8												
7.0												
8.0												
8.2												
9.0												
10												
12												
15												
18												
22												
27												
33												
39												
47												
56												
68												
82												
100												
120												
150												
180												
220												
270												
330												
390												
470												
560												
680												
820												
1000												
1200												
1500												
1800												
2200												
2700												
3300												

Downloaded from Arrow.com.

NMC-P Series

Surface Mount Multilayer Ceramic Capacitors

ROHS/REACH COMPLIANT HALOGEN FREE

NIC COMPONENTS
Performance Passives By Design

NPO VALUES AND SIZES (mm)

EIA Case Size	0805									
Length (L)	2.00 ± 0.3									
Width (W)	1.25 ± 0.3									
Thickness max. (T)	1.55 max.									
Termination Width (P)	0.30 min.									
Capacitance	10	16	25	50	100	200	250	500	630	1KV
0.5pF										
1.0										
1.2										
1.5										
1.8										
2.0										
2.2										
2.7										
3.0										
3.3										
3.9										
4.0										
4.7										
5.0										
5.6										
6.0										
6.8										
7.0										
8.0										
8.2										
9.0										
10										
12										
15										
18										
22										
27										
33										
39										
47										
56										
68										
82										
100										
120										
150										
180										
220										
270										
330										
390										
470										
560										
680										
820										
1000										
1200										
1500										
1800										
2200										
2700										
3300										
3900										
4700										
5600										
6800										
8200										
10000										

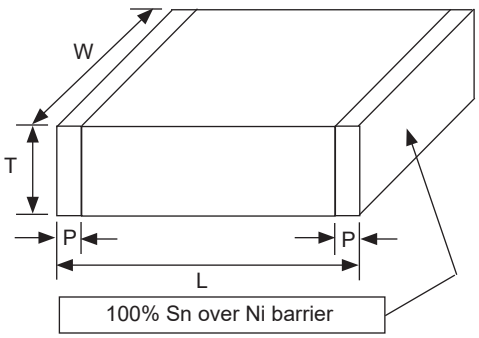

Downloaded from Arrow.com.

NMC-P Series

Surface Mount Multilayer Ceramic Capacitors

ROHS/REACH COMPLIANT HALOGEN FREE

NIC COMPONENTS
Performance Passives By Design

NPO VALUES AND SIZES (mm)

EIA Case Size	1206												
Length (L)	3.20 ± 0.5												
Width (W)	1.60 ± 0.5												
Thickness max. (T)	3.10 max.												
Termination Width (P)	0.25 min.												
Capacitance	Working Voltage (Vdc)												
	10	16	25	50	100	200	250	500	630	1KV	1.5KV	2KV	3KV
1.2pF													
1.5 ~ 4.7													
5.0													
12													
15													
18													
22													
27													
33													
39													
47													
56													
68													
82													
100													
120													
150													
180													
220													
270													
330													
390													
470													
560													
680													
820													
1000													
1200													
1500													
1800													
2200													
2700													
3300													
3900													
4700													
5600													
6800													
8200													
10000													
12000													
15000													
18000													
22000													
27000													
33000													
39000													

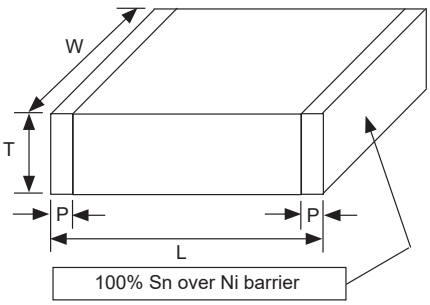

Downloaded from Arrow.com.

NMC-P Series

Surface Mount Multilayer Ceramic Capacitors

ROHS/REACH COMPLIANT HALOGEN FREE

NIC COMPONENTS
Performance Passives By Design

NPO VALUES AND SIZES (mm)

EIA Case Size	1210											
Length (L)	3.20 ± 0.6											
Width (W)	2.50 ± 0.5											
Thickness max. (T)	3.00 max.											
Termination Width (P)	0.50 min.											
Capacitance	Working Voltage (Vdc)											
	10	16	25	50	100	200	250	500	630	1KV	1.5KV	2KV
10pF												
12												
15												
18												
22												
27												
33												
39												
47												
56												
68												
82												
100												
120												
150												
180												
220												
270												
330												
390												
470												
560												
680												
820												
1000												
1200												
1500												
1800												
2200												
2700												
3300												
3900												
4700												
5600												
6800												
8200												
10000												
12000												
15000												
18000												
22000												
27000												
33000												
39000												
47000												
56000												
68000												
100000												

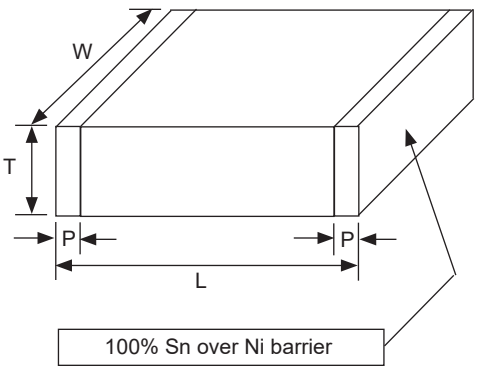

Downloaded from Arrow.com.

NMC-P Series

Surface Mount Multilayer Ceramic Capacitors

ROHS/REACH COMPLIANT HALOGEN FREE

NIC COMPONENTS
Performance Passives By Design

NPO VALUES AND SIZES (mm)

EIA Case Size	1808						
Length (L)	4.50 +0.6/-0.4						
Width (W)	2.03± 0.25						
Thickness max. (T)	2.20 max.						
Termination Width (P)	0.25 min.						
Capacitance	Working Voltage (Vdc)						
	500	630	1KV	1.5KV	2KV	3KV	5K
2.2							
2.7							
3.0							
3.3							
3.9							
4.0							
4.7							
5.0							
5.6							
6.0							
6.8							
7.0							
8.0							
8.2							
9.0							
10							
12							
15							
18							
22							
27							
33							
39							
47							
56							
68							
82							
100							
120							
150							
180							
220							
270							
330							
390							
470							
560							
680							
820							
1000							
1200							
1500							
1800							
2200							
2700							
3300							

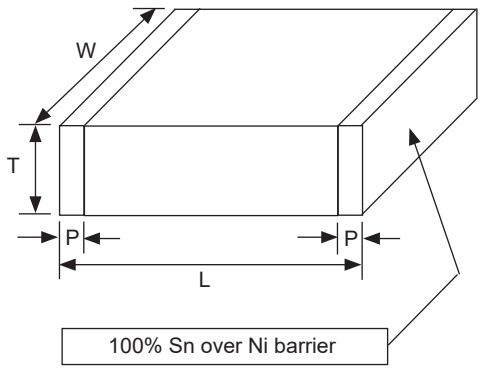

Downloaded from Arrow.com.

NMC-P Series

Surface Mount Multilayer Ceramic Capacitors

ROHS/REACH COMPLIANT HALOGEN FREE

NIC COMPONENTS
Performance Passives By Design

NPO VALUES AND SIZES (mm)

EIA Case Size	1812												
Length (L)	4.5 +0.6/-0.4												
Width (W)	3.20 ± 0.4												
Thickness max. (T)	3.00 max.												
Termination Width (P)	0.25 min.												
Capacitance	Working Voltage (Vdc)												
	10	16	25	50	100	200	250	500	630	1KV	1.5KV	2KV	3KV
10pF													
12													
15													
18													
22													
27													
33													
39													
47													
56													
68													
82													
100													
120													
150													
180													
220													
270													
330													
390													
470													
560													
680													
820													
1000													
1200													
1500													
1800													
2200													
2700													
3300													
3900													
4700													
5600													
6800													
8200													
10000													
12000													
15000													
18000													
22000													
27000													
33000													
39000													
47000													
56000													
68000													
82000													
100000													
120000													
150000													
220000													

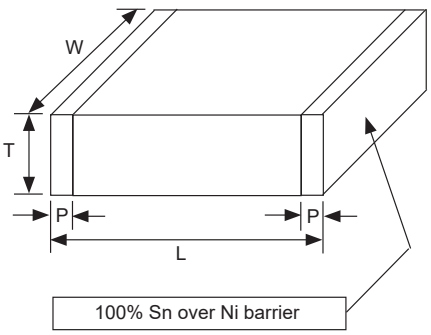

Downloaded from Arrow.com.

NMC-P Series

Surface Mount Multilayer Ceramic Capacitors

ROHS/REACH COMPLIANT HALOGEN FREE

NIC COMPONENTS
Performance Passives By Design

NPO VALUES AND SIZES (mm)

EIA Case Size	1825							
Length (L)	4.5 +0.6/-0.4							
Width (W)	6.30 ± 0.4							
Thickness max. (T)	3.10 max.							
Termination Width (P)	0.40 min.							
Capacitance	Working Voltage (Vdc)							
	100	200	250	500	630	1KV	2KV	3KV
10pF								
12								
15								
18								
22								
27								
33								
39								
47								
56								
68								
82								
100								
120								
150								
180								
220								
270								
330								
390								
470								
560								
680								
820								
1000								
1200								
1500								
1800								
2200								
2700								
3300								
3900								
4700								
5600								
6800								
8200								
10000								
12000								
15000								
18000								
22000								
27000								
33000								
39000								
47000								
68000								
82000								
0.1µF								

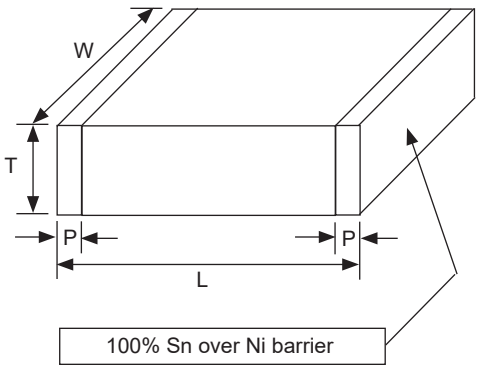

Downloaded from Arrow.com.

NMC-P Series

Surface Mount Multilayer Ceramic Capacitors

ROHS/REACH COMPLIANT HALOGEN FREE

NIC COMPONENTS
Performance Passives By Design

NPO VALUES AND SIZES (mm)

EIA Case Size	2220								
Length (L)	5.70 ± 0.5								
Width (W)	5.00 ± 0.4								
Thickness max. (T)	3.10 max.								
Termination Width (P)	0.50 min.								
Capacitance	Working Voltage (Vdc)								
	100	200	250	500	630	1KV	2KV	3KV	5KV
8.2pF									
10									
12									
15									
18									
22									
27									
33									
39									
47									
56									
68									
82									
100									
120									
150									
180									
220									
270									
330									
390									
470									
560									
680									
820									
1000									
1200									
1500									
1800									
2200									
2700									
3300									
3900									
4700									
5600									
6800									
8200									
10000									
12000									
15000									
18000									
22000									
27000									
33000									
39000									
47000									
68000									
82000									
0.1µF									

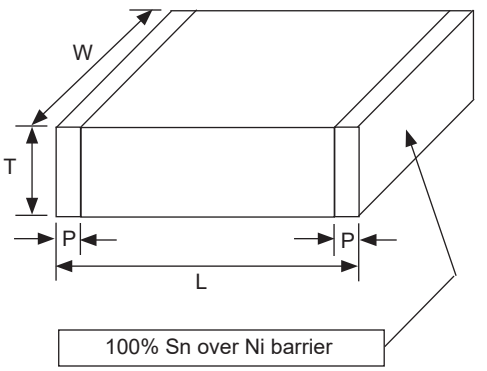

Downloaded from Arrow.com.

NMC-P Series

Surface Mount Multilayer Ceramic Capacitors

ROHS/REACH COMPLIANT HALOGEN FREE

NIC COMPONENTS
Performance Passives By Design

NPO VALUES AND SIZES (mm)

EIA Case Size	2225							
Length (L)	5.70 ± 0.5							
Width (W)	6.30 ± 0.4							
Thickness max. (T)	3.10 max.							
Termination Width (P)	0.50 min.							
Capacitance	Working Voltage (Vdc)							
	100	200	250	500	630	1KV	2KV	3KV
10pF								
12								
15								
18								
22								
27								
33								
39								
47								
56								
68								
82								
100								
120								
150								
180								
220								
270								
330								
390								
470								
560								
680								
820								
1000								
1200								
1500								
1800								
2200								
2700								
3300								
3900								
4700								
5600								
6800								
8200								
10000								
12000								
15000								
18000								
22000								
27000								
33000								
39000								
47000								
68000								
82000								
0.1µF								

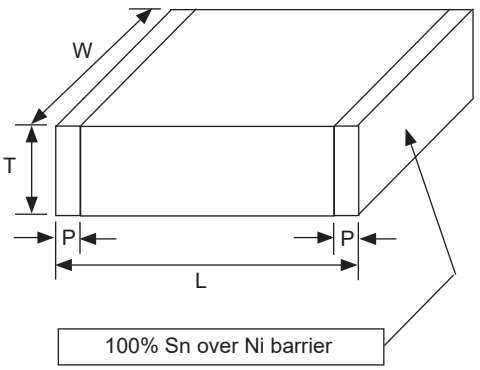

Downloaded from Arrow.com.

NMC-P Series

Surface Mount Multilayer Ceramic Capacitors

ROHS/REACH COMPLIANT HALOGEN FREE

NIC COMPONENTS
Performance Passives By Design

X7R VALUES AND SIZES (mm)

EIA Case Size	0402				
Length (L)	1.00 ± 0.2				
Width (W)	0.50 ± 0.1				
Thickness max. (T)	0.70 max.				
Termination Width (P)	0.15 min.				
Capacitance	Working Voltage (Vdc)				
	10	16	25	50	100
100pF	5%	3.5%	3.5%	2.5%	2.5%
120	5%	3.5%	3.5%	2.5%	2.5%
150	5%	3.5%	3.5%	2.5%	2.5%
180	5%	3.5%	3.5%	2.5%	2.5%
220	5%	3.5%	3.5%	2.5%	2.5%
270	5%	3.5%	3.5%	2.5%	2.5%
330	5%	3.5%	3.5%	2.5%	2.5%
390	5%	3.5%	3.5%	2.5%	2.5%
470	5%	3.5%	3.5%	2.5%	2.5%
560	5%	3.5%	3.5%	2.5%	2.5%
680	5%	3.5%	3.5%	2.5%	2.5%
820	5%	3.5%	3.5%	2.5%	2.5%
1000	5%	3.5%	3.5%	2.5%	2.5%
1200	5%	3.5%	3.5%	2.5%	2.5%
1500	5%	3.5%	3.5%	2.5%	2.5%
1800	5%	3.5%	3.5%	2.5%	2.5%
2200	5%	3.5%	3.5%	2.5%	2.5%
2700	5%	3.5%	3.5%	2.5%	2.5%
3300	5%	3.5%	3.5%	2.5%	2.5%
3900	5%	3.5%	3.5%	2.5%	2.5%
4700	5%	3.5%	3.5%	2.5%	2.5%
5600	5%	3.5%	3.5%	2.5%	
6800	5%	3.5%	3.5%	2.5%	
8200	5%	3.5%	3.5%	2.5%	
10000	5%	3.5%	3.5%	2.5%	
12000	5%	3.5%	3.5%		
15000	5%	3.5%	3.5%		
18000	5%	3.5%	3.5%		
22000	5%	3.5%	3.5%		
27000	5%	3.5%	3.5%		
33000	5%	5%	3.5%		
39000	5%	5%	3.5%		
47000	5%	5%	3.5%		
56000	5%	5%			
68000	5%	5%			
82000	5%	5%			
0.1µF	5%	5%			

Percentages shown are dissipation factors

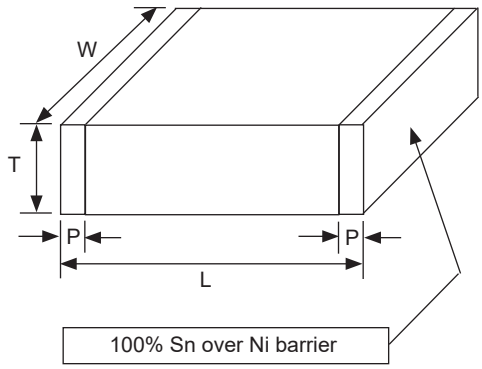

EIA Case Size	0603						
Length (L)	1.60 ± 0.3						
Width (W)	0.80 ± 0.3						
Thickness max. (T)	1.10 max.						
Termination Width (P)	0.25 min.						
Capacitance	Working Voltage (Vdc)						
	10	16	25	50	100	200	250
100pF	5%	3.50%	3.50%	2.50%	2.50%	5%	5%
120	5%	3.50%	3.50%	2.50%	2.50%	5%	5%
150	5%	3.50%	3.50%	2.50%	2.50%	5%	5%
180	5%	3.50%	3.50%	2.50%	2.50%	5%	5%
220	5%	3.50%	3.50%	2.50%	2.50%	5%	5%
270	5%	3.50%	3.50%	2.50%	2.50%	5%	5%
330	5%	3.50%	3.50%	2.50%	2.50%	5%	5%
390	5%	3.50%	3.50%	2.50%	2.50%	5%	5%
470	5%	3.50%	3.50%	2.50%	2.50%	5%	5%
560	5%	3.50%	3.50%	2.50%	2.50%	5%	5%
680	5%	3.50%	3.50%	2.50%	2.50%	5%	5%
820	5%	3.50%	3.50%	2.50%	2.50%	5%	5%
1000	5%	3.50%	3.50%	2.50%	2.50%	5%	5%
1200	5%	3.50%	3.50%	2.50%	2.50%	5%	5%
1500	5%	3.50%	3.50%	2.50%	2.50%	5%	5%
1800	5%	3.50%	3.50%	2.50%	2.50%	5%	5%
2200	5%	3.50%	3.50%	2.50%	2.50%	5%	5%
2700	5%	3.50%	3.50%	2.50%	2.50%	5%	5%
3300	5%	3.50%	3.50%	2.50%	2.50%	5%	5%
3900	5%	3.50%	3.50%	2.50%	2.50%	5%	5%
4700	5%	3.50%	3.50%	2.50%	2.50%	5%	5%
5600	5%	3.50%	3.50%	2.50%	2.50%	5%	5%
6800	5%	3.50%	3.50%	2.50%	2.50%	5%	5%
8200	5%	3.50%	3.50%	2.50%	2.50%	5%	5%
10000	5%	3.50%	3.50%	2.50%	2.50%	5%	5%
12000	5%	3.50%	3.50%	2.50%	2.50%		
15000	5%	3.50%	3.50%	2.50%	2.50%		
18000	5%	3.50%	3.50%	2.50%	2.50%		
22000	5%	3.50%	3.50%	2.50%	2.50%		
27000	5%	3.50%	3.50%	2.50%	2.50%		
33000	5%	3.50%	3.50%	2.50%	2.50%		
39000	5%	3.50%	3.50%	2.50%	2.50%		
47000	5%	3.50%	3.50%	3%	2.50%		
56000	5%	3.50%	3.50%	3%	2.50%		
68000	5%	3.50%	3.50%	3%	5%		
82000	5%	3.50%	3.50%	3%	5%		
0.1µF	5%	3.50%	3.50%	10%	5%		
0.12	5%	3.50%	3.50%				
0.15	5%	5%	3.50%				
0.18	5%	5%	3.50%				
0.22	5%	5%	3.50%	10%			
0.27	5%	5%	3.50%				
0.33	10%	5%	7%				
0.39	10%	5%	7%				
0.47	10%	5%	10%				
0.56	10%	5%					
0.68	10%	10%					
0.82	10%	10%					
1.0	10%	10%	10%				

Percentages shown are dissipation factors

Downloaded from Arrow.com.

NMC-P Series

Surface Mount Multilayer Ceramic Capacitors

ROHS/REACH COMPLIANT HALOGEN FREE

NIC COMPONENTS
Performance Passives By Design

X7R VALUES AND SIZES (mm)

EIA Case Size	0805									
Length (L)	2.00 ± 0.3									
Width (W)	1.25 ± 0.3									
Thickness max. (T)	1.55 max.									
Termination Width (P)	0.30 min.									
Capacitance	Working Voltage (Vdc)									
	10	16	25	50	100	200	250	500	630	1KV
100pF	5%	3.50%	3.50%	2.50%	2.50%	2.50%	2.50%	2.50%	2.50%	2.50%
120	5%	3.50%	3.50%	2.50%	2.50%	2.50%	2.50%	2.50%	2.50%	2.50%
150	5%	3.50%	3.50%	2.50%	2.50%	2.50%	2.50%	2.50%	2.50%	2.50%
180	5%	3.50%	3.50%	2.50%	2.50%	2.50%	2.50%	2.50%	2.50%	2.50%
220	5%	3.50%	3.50%	2.50%	2.50%	2.50%	2.50%	2.50%	2.50%	2.50%
270	5%	3.50%	3.50%	2.50%	2.50%	2.50%	2.50%	2.50%	2.50%	2.50%
330	5%	3.50%	3.50%	2.50%	2.50%	2.50%	2.50%	2.50%	2.50%	2.50%
390	5%	3.50%	3.50%	2.50%	2.50%	2.50%	2.50%	2.50%	2.50%	2.50%
470	5%	3.50%	3.50%	2.50%	2.50%	2.50%	2.50%	2.50%	2.50%	2.50%
560	5%	3.50%	3.50%	2.50%	2.50%	2.50%	2.50%	2.50%	2.50%	2.50%
680	5%	3.50%	3.50%	2.50%	2.50%	2.50%	2.50%	2.50%	2.50%	2.50%
820	5%	3.50%	3.50%	2.50%	2.50%	2.50%	2.50%	2.50%	2.50%	2.50%
1000	5%	3.50%	3.50%	2.50%	2.50%	2.50%	2.50%	2.50%	2.50%	2.50%
1200	5%	3.50%	3.50%	2.50%	2.50%	2.50%	2.50%	2.50%	2.50%	2.50%
1500	5%	3.50%	3.50%	2.50%	2.50%	2.50%	2.50%	2.50%	2.50%	2.50%
1800	5%	3.50%	3.50%	2.50%	2.50%	2.50%	2.50%	2.50%	2.50%	2.50%
2200	5%	3.50%	3.50%	2.50%	2.50%	2.50%	2.50%	2.50%	2.50%	2.50%
2700	5%	3.50%	3.50%	2.50%	2.50%	2.50%	2.50%	2.50%	2.50%	
3300	5%	3.50%	3.50%	2.50%	2.50%	2.50%	2.50%	2.50%	2.50%	
3900	5%	3.50%	3.50%	2.50%	2.50%	2.50%	2.50%	2.50%	2.50%	
4700	5%	3.50%	3.50%	2.50%	2.50%	2.50%	2.50%	2.50%	2.50%	
5600	5%	3.50%	3.50%	2.50%	2.50%	2.50%	2.50%	2.50%	2.50%	
6800	5%	3.50%	3.50%	2.50%	2.50%	2.50%	2.50%	2.50%	2.50%	
8200	5%	3.50%	3.50%	2.50%	2.50%	2.50%	2.50%	2.50%	2.50%	
10000	5%	3.50%	3.50%	2.50%	2.50%	2.50%	2.50%	2.50%	2.50%	
12000	5%	3.50%	3.50%	2.50%	2.50%	2.50%	2.50%	2.50%	2.50%	
15000	5%	3.50%	3.50%	2.50%	2.50%	2.50%	2.50%	2.50%	2.50%	
18000	5%	3.50%	3.50%	2.50%	2.50%	2.50%	2.50%	2.50%	2.50%	
22000	5%	3.50%	3.50%	2.50%	2.50%	2.50%	2.50%	2.50%	2.50%	
27000	5%	3.50%	3.50%	2.50%	2.50%	2.50%	2.50%	2.50%	2.50%	
33000	5%	3.50%	3.50%	2.50%	2.50%	2.50%	2.50%	2.50%		
39000	5%	3.50%	3.50%	2.50%	2.50%	2.50%	2.50%			
47000	5%	3.50%	3.50%	2.50%	2.50%	2.50%	2.50%			
56000	5%	3.50%	3.50%	2.50%	2.50%	2.50%	2.50%			
68000	5%	3.50%	3.50%	2.50%	2.50%	2.50%	2.50%			
82000	5%	3.50%	3.50%	2.50%	2.50%	2.50%				
0.1µF	5%	3.50%	3.50%	2.50%	2.50%	2.50%				
0.12	5%	3.50%	3.50%	2.50%	5%					
0.15	5%	3.50%	3.50%	2.50%	5%					
0.18	5%	3.50%	3.50%	3%	5%					
0.22	5%	3.50%	3.50%	3%	5%					
0.27	5%	3.50%	3.50%	3%						
0.33	5%	3.50%	3.50%	3%						
0.39	5%	3.50%	3.50%	3%						
0.47	5%	3.50%	3.50%	3%	10%					
0.56	5%	3.50%	3.50%							
0.68	5%	5%	3.50%							
0.82	5%	5%	3.50%							
1.0	5%	5%	3.50%	10%						
1.5	5%	5%	3.50%							
2.2	10%	10%	10%							

Percentages shown are dissipation factors

Downloaded from Arrow.com.

NMC-P Series

Surface Mount Multilayer Ceramic Capacitors

ROHS/REACH COMPLIANT HALOGEN FREE

NIC COMPONENTS
Performance Passives By Design

X7R VALUES AND SIZES (mm)

EIA Case Size	1206													
Length (L)	3.20 ± 0.5													
Width (W)	1.60 ± 0.5													
Thickness max. (T)	3.10 max.													
Termination Width (P)	0.25 min.													
Capacitance	Working Voltage (Vdc)													
	10	16	25	50	100	200	250	400	450	500	630	1KV	1.5KV	2KV
100pF						2.50%	2.50%			2.50%	2.50%	2.50%	2.50%	2.50%
120						2.50%	2.50%			2.50%	2.50%	2.50%	2.50%	2.50%
150	5%	5%	3.50%	2.50%	2.50%	2.50%	2.50%			2.50%	2.50%	2.50%	2.50%	2.50%
180	5%	5%	3.50%	2.50%	2.50%	2.50%	2.50%			2.50%	2.50%	2.50%	2.50%	2.50%
220	5%	5%	3.50%	2.50%	2.50%	2.50%	2.50%			2.50%	2.50%	2.50%	2.50%	2.50%
270	5%	5%	3.50%	2.50%	2.50%	2.50%	2.50%			2.50%	2.50%	2.50%	2.50%	2.50%
330	5%	5%	3.50%	2.50%	2.50%	2.50%	2.50%			2.50%	2.50%	2.50%	2.50%	2.50%
390	5%	5%	3.50%	2.50%	2.50%	2.50%	2.50%			2.50%	2.50%	2.50%	2.50%	2.50%
470	5%	5%	3.50%	2.50%	2.50%	2.50%	2.50%			2.50%	2.50%	2.50%	2.50%	2.50%
560	5%	5%	3.50%	2.50%	2.50%	2.50%	2.50%			2.50%	2.50%	2.50%	2.50%	2.50%
680	5%	5%	3.50%	2.50%	2.50%	2.50%	2.50%			2.50%	2.50%	2.50%	2.50%	2.50%
820	5%	5%	3.50%	2.50%	2.50%	2.50%	2.50%			2.50%	2.50%	2.50%	2.50%	2.50%
1000	5%	5%	3.50%	2.50%	2.50%	2.50%	2.50%			2.50%	2.50%	2.50%	2.50%	2.50%
1200	5%	5%	3.50%	2.50%	2.50%	2.50%	2.50%			2.50%	2.50%	2.50%	2.50%	2.50%
1500	5%	5%	3.50%	2.50%	2.50%	2.50%	2.50%			2.50%	2.50%	2.50%	2.50%	2.50%
1800	5%	5%	3.50%	2.50%	2.50%	2.50%	2.50%			2.50%	2.50%	2.50%	2.50%	2.50%
2200	5%	5%	3.50%	2.50%	2.50%	2.50%	2.50%			2.50%	2.50%	2.50%	2.50%	2.50%
2700	5%	5%	3.50%	2.50%	2.50%	2.50%	2.50%			2.50%	2.50%	2.50%	2.50%	2.50%
3300	5%	5%	3.50%	2.50%	2.50%	2.50%	2.50%			2.50%	2.50%	2.50%	2.50%	2.50%
3900	5%	5%	3.50%	2.50%	2.50%	2.50%	2.50%			2.50%	2.50%	2.50%	2.50%	
4700	5%	5%	3.50%	2.50%	2.50%	2.50%	2.50%			2.50%	2.50%	2.50%	2.50%	
5600	5%	5%	3.50%	2.50%	2.50%	2.50%	2.50%			2.50%	2.50%	2.50%	2.50%	
6800	5%	5%	3.50%	2.50%	2.50%	2.50%	2.50%			2.50%	2.50%	2.50%	2.50%	
8200	5%	5%	3.50%	2.50%	2.50%	2.50%	2.50%			2.50%	2.50%	2.50%	2.50%	
10000	5%	5%	3.50%	2.50%	2.50%	2.50%	2.50%			2.50%	2.50%	2.50%	2.50%	
12000	5%	5%	3.50%	2.50%	2.50%	2.50%	2.50%			2.50%	2.50%	2.50%		
15000	5%	5%	3.50%	2.50%	2.50%	2.50%	2.50%			2.50%	2.50%	2.50%		
18000	5%	5%	3.50%	2.50%	2.50%	2.50%	2.50%			2.50%	2.50%			
22000	5%	5%	3.50%	2.50%	2.50%	2.50%	2.50%			2.50%	2.50%			
27000	5%	5%	3.50%	2.50%	2.50%	2.50%	2.50%			2.50%	2.50%			
33000	5%	5%	3.50%	2.50%	2.50%	2.50%	2.50%			2.50%	2.50%			
39000	5%	5%	3.50%	2.50%	2.50%	2.50%	2.50%			2.50%	2.50%			
47000	5%	5%	3.50%	2.50%	2.50%	2.50%	2.50%			2.50%	2.50%			
56000	5%	5%	3.50%	2.50%	2.50%	2.50%	2.50%			2.50%	2.50%			
68000	5%	5%	3.50%	2.50%	2.50%	2.50%	2.50%	2.50%	2.50%					
82000	5%	5%	3.50%	2.50%	2.50%	2.50%	2.50%	2.50%	2.50%					
0.1µF	5%	5%	3.50%	2.50%	2.50%	2.50%	2.50%	2.50%	2.50%					
0.12	5%	5%	3.50%	2.50%	2.50%									
0.15	5%	5%	3.50%	2.50%	2.50%									
0.18	5%	5%	3.50%	2.50%	2.50%									
0.22	5%	5%	3.50%	2.50%	2.50%									
0.27	5%	5%	3.50%	2.50%	2.50%									
0.33	5%	5%	3.50%	2.50%	2.50%									
0.39	5%	5%	3.50%	2.50%	2.50%									
0.47	5%	5%	3.50%	3%	3%									
0.56	5%	5%	3.50%	3%	3%									
0.68	5%	5%	3.50%	3%	3%									
0.82	5%	5%	3.50%	3%	3%									
1.0	5%	5%	3.50%	3%	3%									
1.5	5%	5%	3.50%											
2.2	10%	10%	3.50%	10%										
3.3	10%	10%	3.50%											
4.7	10%	10%	10%	2.5%										
10	10%													

Percentages shown are dissipation factors

Downloaded from Arrow.com.

NMC-P Series

Surface Mount Multilayer Ceramic Capacitors

ROHS/REACH COMPLIANT HALOGEN FREE

NIC COMPONENTS
Performance Passives By Design

X7R VALUES AND SIZES (mm)

EIA Case Size	1210													
Length (L)	3.20 ± 0.6													
Width (W)	2.50 ± 0.5													
Thickness max. (T)	3.00 max.													
Termination Width (P)	0.50 min.													
Capacitance	Working Voltage (Vdc)													
	10	16	25	50	100	200	250	400	450	500	630	1KV	1.5KV	2KV
100pF										2.5%	2.5%	2.5%	2.5%	2.5%
120										2.5%	2.5%	2.5%	2.5%	2.5%
150										2.5%	2.5%	2.5%	2.5%	2.5%
180										2.5%	2.5%	2.5%	2.5%	2.5%
220										2.5%	2.5%	2.5%	2.5%	2.5%
270										2.5%	2.5%	2.5%	2.5%	2.5%
330										2.5%	2.5%	2.5%	2.5%	2.5%
390										2.5%	2.5%	2.5%	2.5%	2.5%
470										2.5%	2.5%	2.5%	2.5%	2.5%
560										2.5%	2.5%	2.5%	2.5%	2.5%
680										2.5%	2.5%	2.5%	2.5%	2.5%
820										2.5%	2.5%	2.5%	2.5%	2.5%
1000	5%	3.5%	3.5%	2.5%	2.5%	2.5%	2.5%			2.5%	2.5%	2.5%	2.5%	2.5%
1200	5%	3.5%	3.5%	2.5%	2.5%	2.5%	2.5%			2.5%	2.5%	2.5%	2.5%	2.5%
1500	5%	3.5%	3.5%	2.5%	2.5%	2.5%	2.5%			2.5%	2.5%	2.5%	2.5%	2.5%
1800	5%	3.5%	3.5%	2.5%	2.5%	2.5%	2.5%			2.5%	2.5%	2.5%	2.5%	2.5%
2200	5%	3.5%	3.5%	2.5%	2.5%	2.5%	2.5%			2.5%	2.5%	2.5%	2.5%	2.5%
2700	5%	3.5%	3.5%	2.5%	2.5%	2.5%	2.5%			2.5%	2.5%	2.5%	2.5%	2.5%
3300	5%	3.5%	3.5%	2.5%	2.5%	2.5%	2.5%			2.5%	2.5%	2.5%	2.5%	2.5%
3900	5%	3.5%	3.5%	2.5%	2.5%	2.5%	2.5%			2.5%	2.5%	2.5%	2.5%	2.5%
4700	5%	3.5%	3.5%	2.5%	2.5%	2.5%	2.5%			2.5%	2.5%	2.5%	2.5%	2.5%
5600	5%	3.5%	3.5%	2.5%	2.5%	2.5%	2.5%			2.5%	2.5%	2.5%	2.5%	2.5%
6800	5%	3.5%	3.5%	2.5%	2.5%	2.5%	2.5%			2.5%	2.5%	2.5%	2.5%	2.5%
8200	5%	3.5%	3.5%	2.5%	2.5%	2.5%	2.5%			2.5%	2.5%	2.5%	2.5%	2.5%
10000	5%	3.5%	3.5%	2.5%	2.5%	2.5%	2.5%			2.5%	2.5%	2.5%		
12000	5%	3.5%	3.5%	2.5%	2.5%	2.5%	2.5%			2.5%	2.5%	2.5%		
15000	5%	3.5%	3.5%	2.5%	2.5%	2.5%	2.5%			2.5%	2.5%	2.5%		
18000	5%	3.5%	3.5%	2.5%	2.5%	2.5%	2.5%			2.5%	2.5%	2.5%		
22000	5%	3.5%	3.5%	2.5%	2.5%	2.5%	2.5%			2.5%	2.5%	2.5%		
27000	5%	3.5%	3.5%	2.5%	2.5%	2.5%	2.5%			2.5%	2.5%	2.5%		
33000	5%	3.5%	3.5%	2.5%	2.5%	2.5%	2.5%			2.5%	2.5%	2.5%		
39000	5%	3.5%	3.5%	2.5%	2.5%	2.5%	2.5%			2.5%	2.5%	2.5%		
47000	5%	3.5%	3.5%	2.5%	2.5%	2.5%	2.5%			2.5%	2.5%	2.5%		
56000	5%	3.5%	3.5%	2.5%	2.5%	2.5%	2.5%			2.5%	2.5%			
68000	5%	3.5%	3.5%	2.5%	2.5%	2.5%	2.5%			2.5%	2.5%			
82000	5%	3.5%	3.5%	2.5%	2.5%	2.5%	2.5%			2.5%	2.5%			
0.1µF	5%	3.5%	3.5%	2.5%	2.5%	2.5%	2.5%			2.5%	2.5%			
0.12	5%	3.5%	3.5%	2.5%	2.5%	2.5%	2.5%	2.5%	2.5%					
0.15	5%	3.5%	3.5%	2.5%	2.5%	2.5%	2.5%	2.5%	2.5%					
0.18	5%	3.5%	3.5%	2.5%	2.5%	2.5%	2.5%	2.5%	2.5%					
0.22	5%	3.5%	3.5%	2.5%	2.5%	2.5%	2.5%	2.5%	2.5%					
0.27	5%	3.5%	3.5%	2.5%	2.5%	2.5%	2.5%	2.5%	2.5%					
0.33	5%	3.5%	3.5%	2.5%	2.5%	2.5%	2.5%	2.5%	2.5%					
0.47	5%	3.5%	3.5%	2.5%	2.5%	2.5%	2.5%							
0.56	5%	3.5%	3.5%	2.5%	2.5%	2.5%	2.5%							
0.68	5%	3.5%	3.5%	2.5%	2.5%	2.5%	2.5%							
0.82	5%	3.5%	3.5%	2.5%	2.5%									
1.0	5%	3.5%	3.5%	2.5%	2.5%									
1.5		3.5%	3.5%	2.5%	2.5%									
2.2		3.5%	3.5%	2.5%	5%									
3.3		3.5%	3.5%	2.5%										
4.7	5%	3.5%	3.5%	5%	10%									
10	5%	3.5%	3.5%	10%										

Percentages shown are dissipation factors

Downloaded from Arrow.com.

X7R VALUES AND SIZES (mm)

EIA Case Size	1808					
Length (L)	4.50 +0.6/-0.4					
Width (W)	2.03 ± 0.25					
Thickness max. (T)	2.20 max.					
Termination Width (P)	0. 25min.					
Capacitance	Working Voltage (Vdc)					
	500	630	1KV	1.5KV	2KV	3KV
150pF	2.5%	2.5%	2.5%	2.5%	2.5%	2.5%
180	2.5%	2.5%	2.5%	2.5%	2.5%	2.5%
220	2.5%	2.5%	2.5%	2.5%	2.5%	2.5%
270	2.5%	2.5%	2.5%	2.5%	2.5%	2.5%
330	2.5%	2.5%	2.5%	2.5%	2.5%	2.5%
390	2.5%	2.5%	2.5%	2.5%	2.5%	2.5%
470	2.5%	2.5%	2.5%	2.5%	2.5%	2.5%
560	2.5%	2.5%	2.5%	2.5%	2.5%	2.5%
680	2.5%	2.5%	2.5%	2.5%	2.5%	2.5%
820	2.5%	2.5%	2.5%	2.5%	2.5%	2.5%
1000	2.5%	2.5%	2.5%	2.5%	2.5%	2.5%
1200	2.5%	2.5%	2.5%	2.5%	2.5%	2.5%
1500	2.5%	2.5%	2.5%	2.5%	2.5%	2.5%
1800	2.5%	2.5%	2.5%	2.5%	2.5%	2.5%
2200	2.5%	2.5%	2.5%	2.5%	2.5%	
2700	2.5%	2.5%	2.5%	2.5%	2.5%	
3300	2.5%	2.5%	2.5%	2.5%	2.5%	
3900	2.5%	2.5%	2.5%	2.5%	2.5%	
4700	2.5%	2.5%	2.5%	2.5%	2.5%	
5600	2.5%	2.5%	2.5%	2.5%	2.5%	
6800	2.5%	2.5%	2.5%	2.5%	2.5%	
8200	2.5%	2.5%	2.5%			
10000	2.5%	2.5%	2.5%			
12000	2.5%	2.5%	2.5%			
15000	2.5%	2.5%	2.5%			
18000	2.5%	2.5%	2.5%			
22000	2.5%	2.5%	2.5%			
27000	2.5%	2.5%	2.5%			
33000	2.5%	2.5%	2.5%			
39000	2.5%	2.5%	2.5%			
47000	2.5%	2.5%	2.5%			
56000	2.5%	2.5%	2.5%			
68000	2.5%	2.5%				
82000	2.5%	2.5%				

Percentages shown are dissipation factors

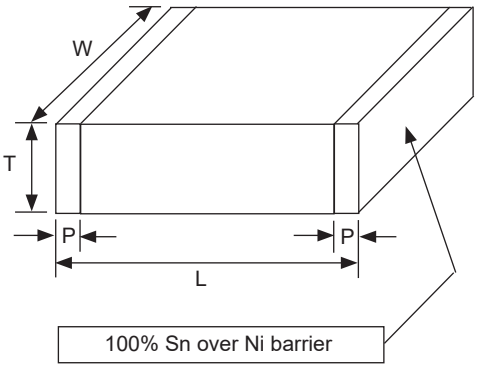

Downloaded from Arrow.com.

NMC-P Series

Surface Mount Multilayer Ceramic Capacitors

ROHS/REACH COMPLIANT HALOGEN FREE

NIC COMPONENTS
Performance Passives By Design

X7R VALUES AND SIZES (mm)

EIA Case Size	1812												
Length (L)	4.50 +0.6/-0.4												
Width (W)	3.20 ± 0.4												
Thickness max. (T)	3.00 max.												
Termination Width (P)	0.25 min.												
Capacitance	Working Voltage (Vdc)												
	10	16	25	50	100	200	250	500	630	1KV	1.5KV	2KV	3KV
270pF						2.50%	2.50%	2.50%	2.50%	2.50%	2.50%	2.50%	2.50%
330						2.50%	2.50%	2.50%	2.50%	2.50%	2.50%	2.50%	2.50%
390						2.50%	2.50%	2.50%	2.50%	2.50%	2.50%	2.50%	2.50%
470						2.50%	2.50%	2.50%	2.50%	2.50%	2.50%	2.50%	2.50%
560						2.50%	2.50%	2.50%	2.50%	2.50%	2.50%	2.50%	2.50%
680						2.50%	2.50%	2.50%	2.50%	2.50%	2.50%	2.50%	2.50%
820						2.50%	2.50%	2.50%	2.50%	2.50%	2.50%	2.50%	2.50%
1000	5%	3.50%	3.50%	3.50%	2.50%	2.50%	2.50%	2.50%	2.50%	2.50%	2.50%	2.50%	2.50%
1200	5%	3.50%	3.50%	3.50%	2.50%	2.50%	2.50%	2.50%	2.50%	2.50%	2.50%	2.50%	2.50%
1500	5%	3.50%	3.50%	3.50%	2.50%	2.50%	2.50%	2.50%	2.50%	2.50%	2.50%	2.50%	2.50%
1800	5%	3.50%	3.50%	3.50%	2.50%	2.50%	2.50%	2.50%	2.50%	2.50%	2.50%	2.50%	2.50%
2200	5%	3.50%	3.50%	3.50%	2.50%	2.50%	2.50%	2.50%	2.50%	2.50%	2.50%	2.50%	2.50%
2700	5%	3.50%	3.50%	3.50%	2.50%	2.50%	2.50%	2.50%	2.50%	2.50%	2.50%	2.50%	2.50%
3300	5%	3.50%	3.50%	3.50%	2.50%	2.50%	2.50%	2.50%	2.50%	2.50%	2.50%	2.50%	2.50%
3900	5%	3.50%	3.50%	3.50%	2.50%	2.50%	2.50%	2.50%	2.50%	2.50%	2.50%	2.50%	2.50%
4700	5%	3.50%	3.50%	3.50%	2.50%	2.50%	2.50%	2.50%	2.50%	2.50%	2.50%	2.50%	2.50%
5600	5%	3.50%	3.50%	3.50%	2.50%	2.50%	2.50%	2.50%	2.50%	2.50%	2.50%	2.50%	2.50%
6800	5%	3.50%	3.50%	3.50%	2.50%	2.50%	2.50%	2.50%	2.50%	2.50%	2.50%	2.50%	2.50%
8200	5%	3.50%	3.50%	3.50%	2.50%	2.50%	2.50%	2.50%	2.50%	2.50%	2.50%	2.50%	
10000	5%	3.50%	3.50%	3.50%	2.50%	2.50%	2.50%	2.50%	2.50%	2.50%	2.50%	2.50%	
12000	5%	3.50%	3.50%	3.50%	2.50%	2.50%	2.50%	2.50%	2.50%	2.50%			
15000	5%	3.50%	3.50%	3.50%	2.50%	2.50%	2.50%	2.50%	2.50%	2.50%			
18000	5%	3.50%	3.50%	3.50%	2.50%	2.50%	2.50%	2.50%	2.50%	2.50%			
22000	5%	3.50%	3.50%	3.50%	2.50%	2.50%	2.50%	2.50%	2.50%	2.50%			
27000	5%	3.50%	3.50%	3.50%	2.50%	2.50%	2.50%	2.50%	2.50%	2.50%			
33000	5%	3.50%	3.50%	3.50%	2.50%	2.50%	2.50%	2.50%	2.50%	2.50%			
39000	5%	3.50%	3.50%	3.50%	2.50%	2.50%	2.50%	2.50%	2.50%	2.50%			
47000	5%	3.50%	3.50%	3.50%	2.50%	2.50%	2.50%	2.50%	2.50%	2.50%			
56000	5%	3.50%	3.50%	3.50%	2.50%	2.50%	2.50%	2.50%	2.50%	2.50%			
68000	5%	3.50%	3.50%	3.50%	2.50%	2.50%	2.50%	2.50%	2.50%	2.50%			
82000	5%	3.50%	3.50%	3.50%	2.50%	2.50%	2.50%	2.50%	2.50%	2.50%			
0.1µF	5%	3.50%	3.50%	3.50%	2.50%	2.50%	2.50%	2.50%	2.50%	2.50%			
0.12	5%	3.50%	3.50%	3.50%	2.50%	2.50%	2.50%	2.50%	2.50%				
0.15	5%	3.50%	3.50%	3.50%	2.50%	2.50%	2.50%	2.50%	2.50%				
0.18	5%	3.50%	3.50%	3.50%	2.50%	2.50%	2.50%	2.50%	2.50%				
0.22	5%	3.50%	3.50%	3.50%	2.50%	2.50%	2.50%	2.50%	2.50%				
0.27	5%	3.50%	3.50%	3.50%	2.50%	2.50%	2.50%	2.50%					
0.33	5%	3.50%	3.50%	3.50%	2.50%	2.50%	2.50%	2.50%					
0.39	5%	3.50%	3.50%	3.50%	2.50%	2.50%	2.50%	2.50%					
0.47	5%	3.50%	3.50%	3.50%	2.50%	2.50%	2.50%	2.50%					
0.56	5%	3.50%	3.50%	3.50%	2.50%	2.50%	2.50%						
0.68	5%	3.50%	3.50%	3.50%	2.50%	2.50%	2.50%						
0.82	5%	3.50%	3.50%	3.50%	2.50%	2.50%	2.50%						
1.0	5%	3.50%	3.50%	3.50%	2.50%	2.50%	2.50%						
1.5					2.50%								
2.2				3.50%	2.50%								
4.7				2.5%									
10				10%									

Percentages shown are dissipation factors

Downloaded from Arrow.com.

NMC-P Series

Surface Mount Multilayer Ceramic Capacitors

ROHS/REACH COMPLIANT HALOGEN FREE

NIC COMPONENTS
Performance Passives By Design

X7R VALUES AND SIZES (mm)

EIA Case Size	1825							
Length (L)	4.50 +0.6/-0.4							
Width (W)	6.30 ± 0.4							
Thickness max. (T)	3.10 max.							
Termination Width (P)	0.40 min.							
Capacitance	Working Voltage (Vdc)							
	50	100	250	500	630	1KV	2KV	3KV
1000pF			2.50%	2.50%	2.50%	2.50%	2.50%	2.50%
1200			2.50%	2.50%	2.50%	2.50%	2.50%	2.50%
1500			2.50%	2.50%	2.50%	2.50%	2.50%	2.50%
1800			2.50%	2.50%	2.50%	2.50%	2.50%	2.50%
2200			2.50%	2.50%	2.50%	2.50%	2.50%	2.50%
2700			2.50%	2.50%	2.50%	2.50%	2.50%	2.50%
3300			2.50%	2.50%	2.50%	2.50%	2.50%	2.50%
3900			2.50%	2.50%	2.50%	2.50%	2.50%	2.50%
4700			2.50%	2.50%	2.50%	2.50%	2.50%	2.50%
5600			2.50%	2.50%	2.50%	2.50%	2.50%	2.50%
6800			2.50%	2.50%	2.50%	2.50%	2.50%	2.50%
8200			2.50%	2.50%	2.50%	2.50%	2.50%	2.50%
10000			2.50%	2.50%	2.50%	2.50%	2.50%	2.50%
12000			2.50%	2.50%	2.50%	2.50%	2.50%	2.50%
15000			2.50%	2.50%	2.50%	2.50%	2.50%	2.50%
18000			2.50%	2.50%	2.50%	2.50%	2.50%	2.50%
22000			2.50%	2.50%	2.50%	2.50%	2.50%	
27000			2.50%	2.50%	2.50%	2.50%	2.50%	
33000			2.50%	2.50%	2.50%	2.50%	2.50%	
39000			2.50%	2.50%	2.50%	2.50%	2.50%	
47000			2.50%	2.50%	2.50%	2.50%	2.50%	
56000			2.50%	2.50%	2.50%	2.50%		
68000			2.50%	2.50%	2.50%	2.50%		
82000			2.50%	2.50%	2.50%	2.50%		
0.1µF	2.50%	2.50%	2.50%	2.50%	2.50%	2.50%		
0.12	2.50%	2.50%	2.50%	2.50%	2.50%			
0.15	2.50%	2.50%	2.50%	2.50%	2.50%			
0.18	2.50%	2.50%	2.50%	2.50%	2.50%			
0.22	2.50%	2.50%	2.50%	2.50%	2.50%			
0.27	2.50%	2.50%	2.50%	2.50%	2.50%			
0.33	2.50%	2.50%	2.50%	2.50%	2.50%			
0.47	2.50%	2.50%	2.50%	2.50%	2.50%			
0.56	2.50%	2.50%	2.50%	2.50%	2.50%			
0.68	2.50%	2.50%	2.50%					
0.82	2.50%	2.50%	2.50%					
1.0	2.50%	2.50%	2.50%					
2.2	2.50%							

Percentages shown are dissipation factors

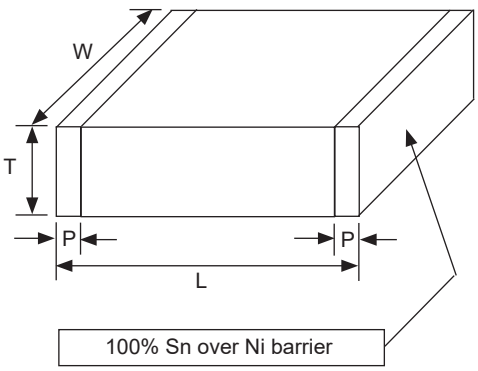

Downloaded from Arrow.com.

X7R VALUES AND SIZES (mm)

EIA Case Size	2220								
Length (L)	5.70 ± 0.5								
Width (W)	5.00 ± 0.4								
Thickness max. (T)	3.10 max.								
Termination Width (P)	0.50 min.								
Capacitance	Working Voltage (Vdc)								
	25	50	100	250	500	630	1KV	2KV	3KV
1000pF	2.50%	2.50%	2.50%	2.50%	2.50%	2.50%	2.50%	2.50%	2.50%
1200	2.50%	2.50%	2.50%	2.50%	2.50%	2.50%	2.50%	2.50%	2.50%
1500	2.50%	2.50%	2.50%	2.50%	2.50%	2.50%	2.50%	2.50%	2.50%
1800	2.50%	2.50%	2.50%	2.50%	2.50%	2.50%	2.50%	2.50%	2.50%
2200	2.50%	2.50%	2.50%	2.50%	2.50%	2.50%	2.50%	2.50%	2.50%
2700	2.50%	2.50%	2.50%	2.50%	2.50%	2.50%	2.50%	2.50%	2.50%
3300	2.50%	2.50%	2.50%	2.50%	2.50%	2.50%	2.50%	2.50%	2.50%
3900	2.50%	2.50%	2.50%	2.50%	2.50%	2.50%	2.50%	2.50%	2.50%
4700	2.50%	2.50%	2.50%	2.50%	2.50%	2.50%	2.50%	2.50%	2.50%
5600	2.50%	2.50%	2.50%	2.50%	2.50%	2.50%	2.50%	2.50%	2.50%
6800	2.50%	2.50%	2.50%	2.50%	2.50%	2.50%	2.50%	2.50%	2.50%
8200	2.50%	2.50%	2.50%	2.50%	2.50%	2.50%	2.50%	2.50%	2.50%
10000	2.50%	2.50%	2.50%	2.50%	2.50%	2.50%	2.50%	2.50%	2.50%
12000	2.50%	2.50%	2.50%	2.50%	2.50%	2.50%	2.50%	2.50%	2.50%
15000	2.50%	2.50%	2.50%	2.50%	2.50%	2.50%	2.50%	2.50%	2.50%
18000	2.50%	2.50%	2.50%	2.50%	2.50%	2.50%	2.50%	2.50%	2.50%
22000	2.50%	2.50%	2.50%	2.50%	2.50%	2.50%	2.50%	2.50%	
27000	2.50%	2.50%	2.50%	2.50%	2.50%	2.50%	2.50%	2.50%	
33000	2.50%	2.50%	2.50%	2.50%	2.50%	2.50%	2.50%	2.50%	
39000	2.50%	2.50%	2.50%	2.50%	2.50%	2.50%	2.50%	2.50%	
47000	2.50%	2.50%	2.50%	2.50%	2.50%	2.50%	2.50%	2.50%	
56000	2.50%	2.50%	2.50%	2.50%	2.50%	2.50%	2.50%	2.50%	
68000	2.50%	2.50%	2.50%	2.50%	2.50%	2.50%	2.50%		
82000	2.50%	2.50%	2.50%	2.50%	2.50%	2.50%	2.50%		
0.1µF	2.50%	2.50%	2.50%	2.50%	2.50%	2.50%	2.50%		
0.12	2.50%	2.50%	2.50%	2.50%	2.50%	2.50%	2.50%		
0.15	2.50%	2.50%	2.50%	2.50%	2.50%	2.50%	2.50%		
0.18	2.50%	2.50%	2.50%	2.50%	2.50%	2.50%	2.50%		
0.22	2.50%	2.50%	2.50%	2.50%	2.50%	2.50%	2.50%		
0.27	2.50%	2.50%	2.50%	2.50%	2.50%	2.50%			
0.33	2.50%	2.50%	2.50%	2.50%	2.50%	2.50%			
0.47	2.50%	2.50%	2.50%	2.50%	2.50%	2.50%			
0.56	2.50%	2.50%	2.50%	2.50%	2.50%	2.50%			
0.68	2.50%	2.50%	2.50%	2.50%	2.50%	2.50%			
0.82	2.50%	2.50%	2.50%	2.50%	2.50%	2.50%			
1.0	2.50%	2.50%	2.50%	2.50%	2.50%	2.50%			
1.5	2.50%	2.50%	2.50%	2.50%					
2.2	2.50%	2.50%	2.50%	2.50%					
3.3		2.50%							
4.7		2.50%	2.50%						
6.8		2.50%	2.50%						
10		2.50%	2.50%						

Percentages shown are dissipation factors

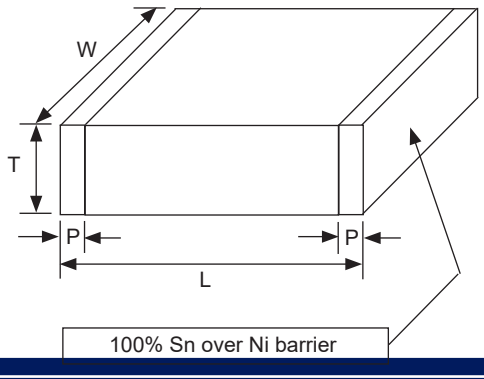

Downloaded from Arrow.com.

NMC-P Series

Surface Mount Multilayer Ceramic Capacitors

ROHS/REACH COMPLIANT HALOGEN FREE

NIC COMPONENTS
Performance Passives By Design

X7R VALUES AND SIZES (mm)

EIA Case Size	2225							
Length (L)	5.70 ± 0.5							
Width (W)	6.30 ± 0.4							
Thickness max. (T)	3.10 max.							
Termination Width (P)	0.50 min.							
Capacitance	Working Voltage (Vdc)							
	50	100	250	500	630	1KV	2KV	3KV
1000pF				2.5%	2.5%	2.5%	2.5%	2.5%
1200				2.5%	2.5%	2.5%	2.5%	2.5%
1500				2.5%	2.5%	2.5%	2.5%	2.5%
1800				2.5%	2.5%	2.5%	2.5%	2.5%
2200				2.5%	2.5%	2.5%	2.5%	2.5%
2700				2.5%	2.5%	2.5%	2.5%	2.5%
3300				2.5%	2.5%	2.5%	2.5%	2.5%
3900				2.5%	2.5%	2.5%	2.5%	2.5%
4700				2.5%	2.5%	2.5%	2.5%	2.5%
5600				2.5%	2.5%	2.5%	2.5%	2.5%
6800				2.5%	2.5%	2.5%	2.5%	2.5%
8200				2.5%	2.5%	2.5%	2.5%	2.5%
10000			2.5%	2.5%	2.5%	2.5%	2.5%	2.5%
12000			2.5%	2.5%	2.5%	2.5%	2.5%	2.5%
15000			2.5%	2.5%	2.5%	2.5%	2.5%	2.5%
18000			2.5%	2.5%	2.5%	2.5%	2.5%	2.5%
22000			2.5%	2.5%	2.5%	2.5%	2.5%	
27000			2.5%	2.5%	2.5%	2.5%	2.5%	
33000			2.5%	2.5%	2.5%	2.5%	2.5%	
39000			2.5%	2.5%	2.5%	2.5%	2.5%	
47000			2.5%	2.5%	2.5%	2.5%	2.5%	
56000			2.5%	2.5%	2.5%	2.5%	2.5%	
68000			2.5%	2.5%	2.5%	2.5%		
82000			2.5%	2.5%	2.5%	2.5%		
0.1µF	2.5%	2.5%	2.5%	2.5%	2.5%	2.5%		
0.12	2.5%	2.5%	2.5%	2.5%	2.5%	2.5%		
0.15	2.5%	2.5%	2.5%	2.5%	2.5%	2.5%		
0.18	2.5%	2.5%	2.5%	2.5%	2.5%	2.5%		
0.22	2.5%	2.5%	2.5%	2.5%	2.5%	2.5%		
0.27	2.5%	2.5%	2.5%	2.5%	2.5%			
0.33	2.5%	2.5%	2.5%	2.5%	2.5%			
0.47	2.5%	2.5%		2.5%	2.5%			
0.56	2.5%	2.5%		2.5%	2.5%			
0.68	2.5%	2.5%						
1.0	2.5%	2.5%						
1.5	2.5%	2.5%						
2.2	2.5%	2.5%						
3.3	2.5%	2.5%						
4.7	2.5%	2.5%						
6.8	2.5%							
10	2.5%							

Percentages shown are dissipation factors

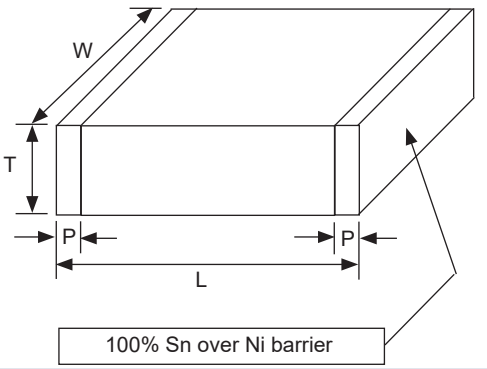

Downloaded from Arrow.com.

X7R Insulation Resistance

Size	Capacitance	Voltage	IR Mohm (min.)	Size	Capacitance	Voltage	IR Mohm (min.)	Size	Capacitance	Voltage	IR Mohm (min.)	Size	Capacitance	Voltage	IR Mohm (min.)
0402	100~47000	10~16	10000	**0603**	100~47000	10~50	10000	**0805**	100~4700	10~50	10000	**1206**	150~47000	10~50	10000
0402	56000	10~16	8928	**0603**	56000	10~50	8928	**0805**	56000	10~50	8928	**1206**	56000	10~50	8928
0402	68000	10~16	7352	**0603**	68000	10~50	7352	**0805**	68000	10~50	7352	**1206**	68000	10~50	7352
0402	82000	10~16	6097	**0603**	82000	10~50	6097	**0805**	82000	10~50	6097	**1206**	82000	10~50	6097
0402	100000	10~16	5000	**0603**	100000	10~50	5000	**0805**	100000	10~50	5000	**1206**	100000	10~50	5000
				0603	120000	10~25	4166	**0805**	120000	10~50	4166	**1206**	120000	10~50	4166
0402	All	25	10000	**0603**	150000	10~25	3333	**0805**	150000	10~50	3333	**1206**	150000	10~50	3333
0402	All	50	10000	**0603**	180000	10~25	2777	**0805**	180000	10~50	2777	**1206**	180000	10~50	2777
0402	All	100	10000	**0603**	220000	10~50	2272	**0805**	220000	10~50	2272	**1206**	220000	10~50	2272
				0603	270000	10~25	1851	**0805**	270000	10~50	1851	**1206**	270000	10~50	1851
				0603	330000	10~25	1515	**0805**	330000	10~50	1515	**1206**	330000	10~50	1515
				0603	390000	10~25	1282	**0805**	390000	10~50	1282	**1206**	390000	10~50	1282
				0603	470000	10~25	212	**0805**	470000	10~50	1063.8	**1206**	470000	10~50	1063
				0603	560000	10~16	178	**0805**	560000	10~25	892.8	**1206**	560000	10~50	892
				0603	680000	10~16	147	**0805**	680000	10~25	735.2	**1206**	680000	10~50	735
				0603	820000	10~16	121	**0805**	820000	10~25	609.7	**1206**	820000	10~50	609
				0603	1000000	10~25	100	**0805**	1000000	10~50	500	**1206**	1000000	10~50	500
								0805	1500000	10~25	333.3	**1206**	1500000	10~25	333
								0805	2200000	10~25	45.4	**1206**	2200000	10~50	227
												1206	3300000	10~25	151
				0603	100~10000	100	10000	**0805**	100~2200	100~1000	10000	**1206**	4700000	10~50	21
				0603	12000	100	8333	**0805**	2700~10000	100~630	10000	**1206**	10000000	10	10
				0603	15000	100	6666	**0805**	12000	100~630	8333				
				0603	18000	100	5555	**0805**	15000	100~630	6666				
				0603	22000	100	4545	**0805**	18000	100~630	5555	**1206**	150~10000	100~630	10000
				0603	27000	100	3703	**0805**	22000	100~630	4545	**1206**	12000	100~630	8333
				0603	33000	100	3030	**0805**	27000	100~630	3703	**1206**	15000	100~630	6666
				0603	39000	100	2564	**0805**	33000	100~500	3030	**1206**	18000	100~630	5555
				0603	47000	100	2127	**0805**	39000	100~250	2564	**1206**	22000	100~630	4545
				0603	56000	100	1785	**0805**	47000	100~250	2127	**1206**	27000	100~630	3703
				0603	68000	100	1470	**0805**	56000	100~250	1785	**1206**	33000	100~630	3030
				0603	82000	100	1219	**0805**	68000	100~250	1470	**1206**	39000	100~630	2564
				0603	100000	100	1000	**0805**	82000	100~200	1219	**1206**	47000	100~630	2127
								0805	100000	100~200	1000	**1206**	56000	100~630	1785
				0603	All	200~250	10000	**0805**	120000	100	833	**1206**	68000	100~450	1470
								0805	150000	100	666	**1206**	82000	100~450	1219
								0805	180000	100	555	**1206**	100000	100~450	1000
								0805	220000	100	454	**1206**	120000	100	833
												1206	150000	100	666
												1206	180000	100	555
												1206	220000	100	454
												1206	270000	100	370
												1206	330000	100	303
												1206	390000	100	256
												1206	470000	100	212
												1206	560000	100	178
												1206	680000	100	147
												1206	820000	100	121
												1206	1000000	100	100
												1206	100~10000	1000	10000
												1206	12000	1000	8333
												1206	15000	1000	6666
												1206	All	2000	10000

Downloaded from Arrow.com.

NMC-P Series

Surface Mount Multilayer Ceramic Capacitors

ROHS/REACH COMPLIANT HALOGEN FREE

NIC COMPONENTS
Performance Passives By Design

X7R Insulation Resistance

Size	Capacitance	Voltage	IR Mohm (min.)	Size	Capacitance	Voltage	IR Mohm (min.)	Size	Capacitance	Voltage	IR Mohm (min.)	Size	Capacitance	Voltage	IR Mohm (min.)
1210	47000000	6.3	2.12	**1808**	150~10000	500~1KV	10000	**1812**	1000~10000	10~1KV	10000	**1825**	1000~10000	250~3KV	10000
				1808	12000	500	8333	**1812**	12000	10~1KV	8333	**1825**	12000	250~3KV	8333
1210	1000~47000	10~50	10000	**1808**	15000	500	6666	**1812**	15000	10~1KV	6666	**1825**	15000	250~3KV	6666
1210	56000	10~50	8928	**1808**	18000	500	5555	**1812**	18000	10~1KV	5555	**1825**	18000	250~3KV	5555
1210	68000	10~50	7352	**1808**	22000	500	4545	**1812**	22000	10~1KV	4545	**1825**	22000	250~2KV	4545
1210	82000	10~50	6097	**1808**	27000	500	3703	**1812**	27000	10~1KV	3703	**1825**	27000	250~2KV	3703
1210	100000	10~50	5000	**1808**	33000	500	3030	**1812**	33000	10~1KV	3030	**1825**	33000	250~2KV	3030
1210	120000	10~50	4166	**1808**	39000	500	2564	**1812**	39000	10~1KV	2564	**1825**	39000	250~2KV	2564
1210	150000	10~50	3333	**1808**	47000	500	2127	**1812**	47000	10~1KV	2127	**1825**	47000	250~2KV	2127
1210	180000	10~50	2777	**1808**	56000	500	1785	**1812**	56000	10~1KV	1785	**1825**	56000	250~1KV	1785
1210	220000	10~50	2272	**1808**	68000	500	1470	**1812**	68000	10~1KV	1470	**1825**	68000	250~1KV	1470
1210	270000	10~50	1851	**1808**	82000	500	1219	**1812**	82000	10~1KV	1219	**1825**	82000	250~1KV	1219
1210	330000	10~50	1515					**1812**	100000	10~1KV	1000	**1825**	100000	50~1KV	1000
1210	390000	10~50	1282	**1808**	All	1500	10000	**1812**	120000	10~630	833	**1825**	120000	50~630	833
1210	470000	10~50	1063	**1808**	All	2000	10000	**1812**	150000	10~630	666	**1825**	150000	50~630	666
1210	560000	10~50	892	**1808**	All	3000	10000	**1812**	180000	10~630	555	**1825**	180000	50~630	555
1210	680000	10~50	735					**1812**	220000	10~630	454	**1825**	220000	50~630	454
1210	820000	10~50	609					**1812**	270000	10~500	370	**1825**	270000	50~630	370
1210	1000000	10~50	500					**1812**	330000	10~500	303	**1825**	330000	50~630	303
1210	2200000	10~50	227					**1812**	390000	10~500	256	**1825**	390000	50~630	256
1210	3300000	10~50	151					**1812**	470000	10~500	212	**1825**	470000	50~630	212
1210	3300000	10~50	151					**1812**	560000	10~250	178	**1825**	560000	50~630	178
1210	4700000	10~50	21.2					**1812**	680000	10~250	147	**1825**	680000	50~250	147
1210	10000000	10~50	10					**1812**	820000	10~250	121	**1825**	820000	50~250	121
								1812	1000000	10~250	100	**1825**	1000000	50~250	100
1210	1000~10000	100~1KV	10000					**1812**	4700000	50	106	**1825**	2200000	50	227
1210	12000	100~1KV	8333					**1812**	10000000	50	50				
1210	15000	100~1KV	6666					**1812**	All	1500KV	10000				
1210	18000	100~1KV	5555					**1812**	All	2000KV	10000				
1210	22000	100~1KV	4545					**1812**	All	3000KV	10000				
1210	27000	100~1KV	3703												
1210	33000	100~1KV	3030												
1210	39000	100~1KV	2564												
1210	47000	100~1KV	2127												
1210	56000	100~1KV	1785												
1210	68000	100~1KV	1470												
1210	82000	100~1KV	1219												
1210	100000	100~1KV	1000												
1210	120000	100~1KV	833												
1210	150000	100~1KV	666												
1210	180000	100~1KV	555												
1210	220000	100~1KV	454												
1210	270000	100~1KV	370												
1210	330000	100~1KV	303												
1210	390000	100~1KV	256												
1210	470000	100~1KV	212												
1210	560000	100~1KV	178												
1210	680000	100~1KV	147												
1210	820000	100~1KV	121												
1210	1000000	100~1KV	100												
1210	1500000	100~1KV	66												
1210	2200000	100~1KV	45												
1210	4700000	100V	106												
1210	All	1500	10000												
1210	All	2000	10000												

Downloaded from Arrow.com.

X7R Insulation Resistance

Size	Capacitance	Voltage	IR Mohm (min.)	Size	Capacitance	Voltage	IR Mohm (min.)
2220	1000~47000	25~2KV	10000	**2225**	1000~47000	250~2KV	10000
2220	56000	25~2KV	8928	**2225**	56000	250~2KV	8928
2220	68000	25~1KV	7352	**2225**	68000	250~1KV	7352
2220	82000	25~1KV	6097	**2225**	82000	250~1KV	6097
2220	100000	25~1KV	5000	**2225**	100000	50~1KV	5000
2220	120000	25~1KV	4166	**2225**	120000	50~1KV	4166
2220	150000	25~1KV	3333	**2225**	150000	50~1KV	3333
2220	180000	25~1KV	2777	**2225**	180000	50~1KV	2777
2220	220000	25~1KV	2272	**2225**	220000	50~1KV	2272
2220	270000	25~630	1851	**2225**	270000	50~630	1851
2220	330000	25~630	1515	**2225**	330000	50~630	1515
2220	390000	25~630	1282	**2225**	470000	500~630	1063
2220	470000	25~630	1063	**2225**	560000	500~630	892
2220	560000	25~630	1000				
2220	680000	25~630	735	**2225**	All	3KV	10000
2220	820000	25~630	609				
2220	1000000	25~630	500				
2220	1500000	25~250	333				
2220	2200000	25~250	227				
2220	3300000	50	151				
2220	4700000	50~100	106				
2220	6800000	50~100	73				
2220	10000000	50~100	50				
2220	All	3KV	10000				

Downloaded from Arrow.com.

NMC-P Series

Surface Mount Multilayer Ceramic Capacitors

ROHS/REACH COMPLIANT HALOGEN FREE

NIC COMPONENTS
Performance Passives By Design

X5R VALUES AND SIZES (mm)

EIA Case Size	0402				0603				0805				1206				1210			
Length (L)	1.00 ± 0.2				1.60 ± 0.3				2.00 ± 0.3				3.20 ± 0.5				3.20 ± 0.6			
Width (W)	0.50 ± 0.2				0.80 ± 0.2				1.25 ± 0.3				1.60 ± 0.5				2.50 ± 0.5			
Thickness max. (T)	0.70 max.				1.10 max.				1.55 max.				3.10 max.				3.00 max.			
Termination Width (P)	0.15 min.				0.25 min.				0.30 min.				0.25 min.				0.25 min.			
Capacitance	Working Voltage (Vdc)																			
	6.3	10	16	25	6.3	10	16	25	6.3	10	16	25	6.3	10	16	25	6.3	10	16	25
33000pF			5%																	
39000			5%																	
47000			5%																	
56000		5%	5%																	
68000		5%	5%																	
82000	10%	5%	5%																	
0.1µF	10%	5%	5%	5%																
0.15	10%	5%	5%	5%																
0.22	10%	5%	10%	5%			5%	3.5%												
0.27						5%	5%	3.5%												
0.33	10%	10%			10%	10%	5%	3.5%												
0.39						10%	5%	3.5%												
0.47	10%	10%				10%	5%	10%												
0.68	10%	10%			10%	10%	10%	10%												
0.82					10%	10%	10%													
1.0					10%	10%	10%	10%												
1.5					10%				10%	5%	5%	5%		5%	3.5%			5%	3.5%	
2.2					10%	10%	10%		10%	10%	10%	10%		10%	5%	3.5%		5%	3.5%	
3.3					10%				10%	10%	10%	10%		10%	5%	3.5%				
4.7					10%								10%	10%	10%	10%		5%	5%	3.5%
6.8													10%	10%						
10													10%	10%	10%	10%	10%	5%	5%	

Percentages shown are dissipation factors

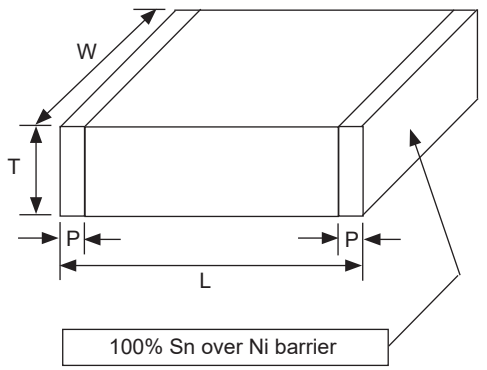

Downloaded from Arrow.com.

X5R Insulation Resistance

Size	Capacitance	Voltage	IR Mohm (min.)	Size	Capacitance	Voltage	IR Mohm (min.)	Size	Capacitance	Voltage	IR Mohm (min.)	Size	Capacitance	Voltage	IR Mohm (min.)
0402	82000	6.3	1219	**0603**	330000	6.3	303	**0805**	1500000	6.3	66	**1206**	4700000	6.3	21
0402	100000	6.3	1000	**0603**	680000	6.3	147	**0805**	2200000	6.3	45	**1206**	6800000	6.3	14
0402	150000	6.3	666	**0603**	820000	6.3	121	**0805**	3300000	6.3	30	**1206**	10000000	6.3	10
0402	220000	6.3	454	**0603**	1000000	6.3	100	**0805**	1000000	10	500	**1206**	1500000	10	333
0402	330000	6.3	303	**0603**	1500000	6.3	66	**0805**	1500000	10	333	**1206**	2200000	10	227
0402	470000	6.3	212	**0603**	2200000	6.3	45	**0805**	2200000	10	45	**1206**	3300000	10	151
0402	680000	6.3	147	**0603**	3300000	6.3	30	**0805**	3300000	10	30	**1206**	4700000	10	21
0402	1000000	6.3	100	**0603**	4700000	6.3	21	**0805**	1000000	16	500	**1206**	6800000	10	14
0402	56000	10	8928	**0603**	270000	10	1851	**0805**	1500000	16	333	**1206**	10000000	10	10
0402	68000	10	7352	**0603**	330000	10	1515	**0805**	2200000	16	45	**1206**	1500000	16	333
0402	82000	10	6097	**0603**	390000	10	1282	**0805**	3300000	16	30	**1206**	2200000	16	227
0402	100000	10	5000	**0603**	470000	10	212	**0805**	1000000	25	500	**1206**	3300000	16	151
0402	150000	10	3333	**0603**	680000	10	147	**0805**	1500000	25	333	**1206**	4700000	16	106
0402	220000	10	2272	**0603**	820000	10	121	**0805**	2200000	25	45	**1206**	10000000	16	10
0402	330000	10	1515	**0603**	1000000	10	100	**0805**	3300000	25	30	**1206**	2200000	25	227
0402	470000	10	212	**0603**	2200000	10	45					**1206**	3300000	25	151
0402	680000	10	147	**0603**	220000	16	2272					**1206**	4700000	25	106
0402	1000000	10	100	**0603**	270000	16	1851					**1206**	10000000	25	10
				0603	330000	16	1515								
0402	33000	16	10000	**0603**	390000	16	1282					**1210**	10000000	6.3	10
0402	39000	16	10000	**0603**	470000	16	1063					**1210**	1500000	10	333
0402	47000	16	10000	**0603**	680000	16	735					**1210**	2200000	10	227
0402	56000	16	8928	**0603**	820000	16	609					**1210**	4700000	10	106
0402	68000	16	7352	**0603**	1000000	16	100					**1210**	10000000	10	50
0402	82000	16	6097	**0603**	2200000	16	45					**1210**	1500000	16	333
0402	100000	16	5000	**0603**	220000	25	2272					**1210**	2200000	16	227
0402	150000	16	3333	**0603**	270000	25	1851					**1210**	4700000	16	106
0402	220000	16	454	**0603**	330000	25	1515					**1210**	10000000	16	50
0402	100000	25	5000	**0603**	390000	25	1282					**1210**	4700000	25	106
0402	150000	25	3333	**0603**	470000	25	1063								
0402	220000	25	2272	**0603**	680000	25	735								
				0603	1000000	25	500								

Downloaded from Arrow.com.

PUNCHED CARRIER TAPE DIMENSIONS (mm)

Type	A_o	B_o	W	F	E	P1	P0	D0	T max.	Reel Quantity
0402	0.70 ± 0.2	1.2 ± 0.2	8.0 ± 0.3	3.5 ± 0.05	1.75 ± 0.1	4.0 ± 0.10	4.0 ± 0.1	1.5 +0.1/-0.0	0.80	10K
0603	1.05 ± 0.3	1.8 ± 0.3							1.2	4K
0805	1.50 ± 0.2	2.3 ± 0.2								4K
1206	1.90 ± 0.5	3.5 ± 0.5								4K

PUNCHED CARRIER TAPE

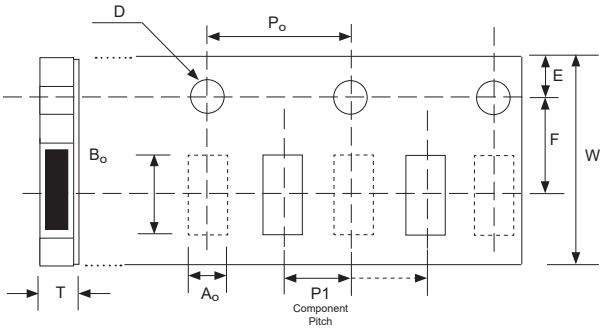

EMBOSSED PLASTIC CARRIER TAPE DIMENSIONS (mm)

Case Size	Max. Component Thickness	A_o max.	B_o max.	W	F	E	P_0	P_1	P_2	D_0	K max.	Reel Quantity
1206	1.35	2.00	3.70	8.0 ± 0.3	3.5 ± 0.05	1.75 ± 0.1	4.0 ± 0.1	4.0 ± 0.10	2.0 ± 0.1	1.5 +0.1/-0.0	2.5	3K
	2.10	2.30	4.00									2K
1210	1.35	3.05	3.80								2.5	3K
	2.20											2K
	3.00	3.20	4.00								3.2	1K
1808	2.20	2.50	5.30	12.0 ± 0.3	5.5 ± 0.1			8.0 ± 0.10			2.5	1K
1812	2.20	3.90	5.30								2.5	1K
	3.00										3.5	500
1825	2.20	6.80	5.30		5.5 ± 0.05						2.5	1K
	3.10										3.5	500
2220	2.20	5.80	6.50								2.5	1K
	3.10										3.5	500
2225	2.20	6.80	6.50								2.5	1K
	3.10										3.5	500

EMBOSSED PLASTIC CARRIER TAPE

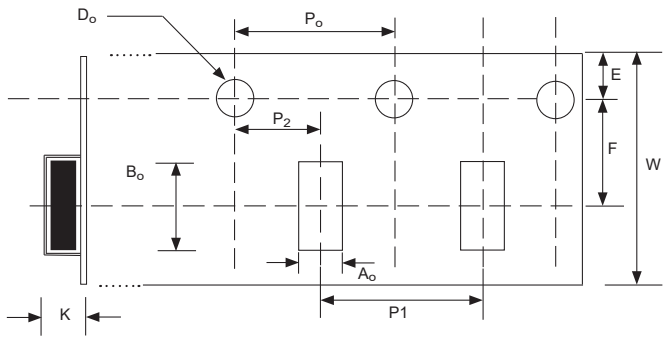

Downloaded from Arrow.com.

REEL

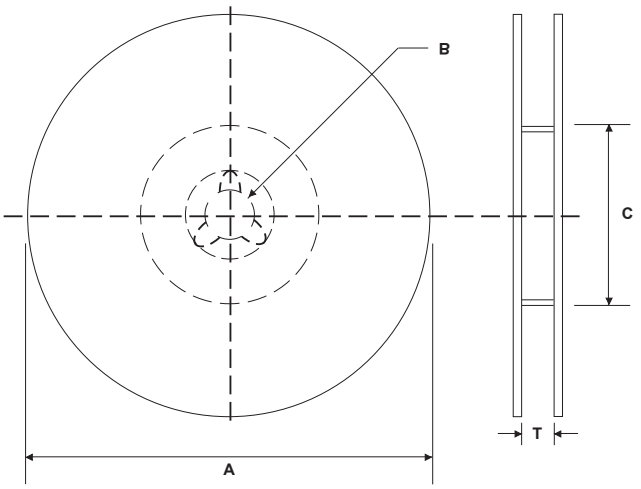

REEL DIMENSIONS (mm)

Reel Diameter (A)	B	C	T max.
7” (178 ± 1.0)	13.0 +0.5/-0.2	60 +1/-0	8.4 +1.5/-0 (1808~2225 12.4 +2.0/-0)
10” (250 ± 1.0)		100 ± 1.0	
13” (330 ± 1.0)		100 ± 1.0	

LAND PATTERN DIMENSIONS (mm)

Dimension	0402	0603	0805	1206	1210	1808	1812	1825	2220	2225
A	0.40	0.70	1.00	2.20	2.20	3.30	3.50	3.50	4.30	4.30
B	0.50	0.80	0.90	0.90	0.90	1.05	0.90	0.90	1.35	1.35
C	0.50	0.80	1.30	1.60	2.50	2.30	3.80	6.50	5.00	6.50

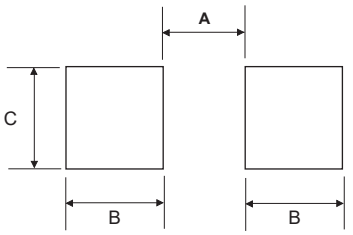

Downloaded from Arrow.com.