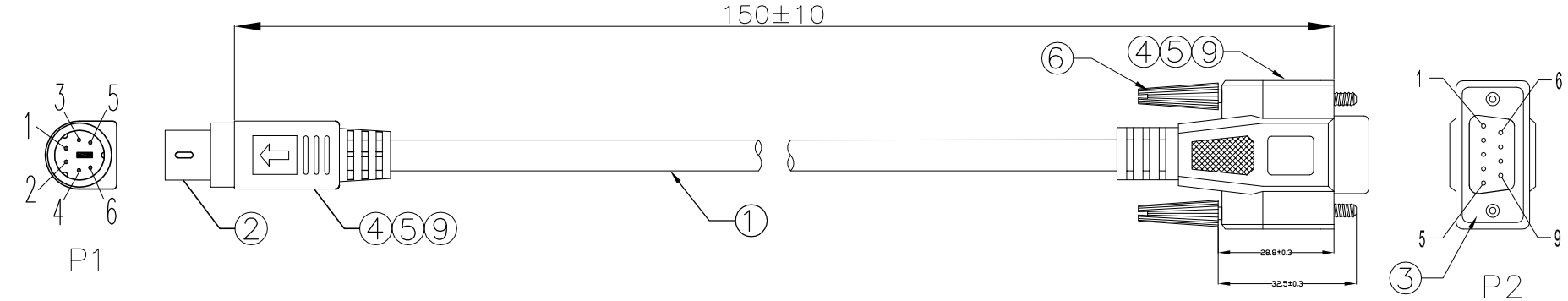

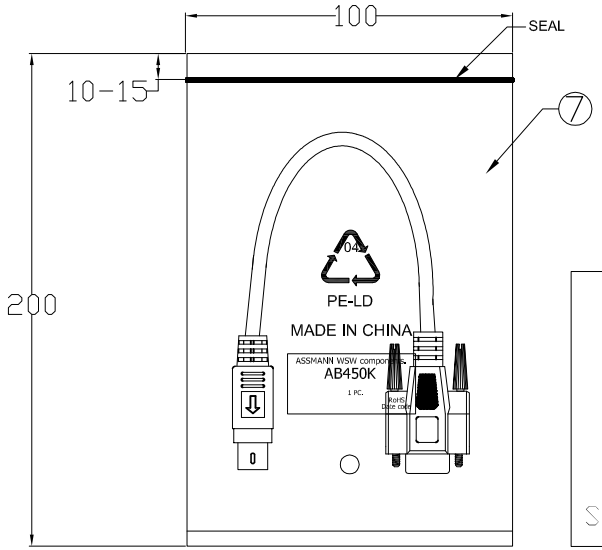

1PCS/PE BAG

Electrical test:

1.100% short,open,miss wire test
2.Conduct resistance:2 Ohm(max)
3.Insulation resistance:5Mohm(min)
4.Dielectric test:DC 300V

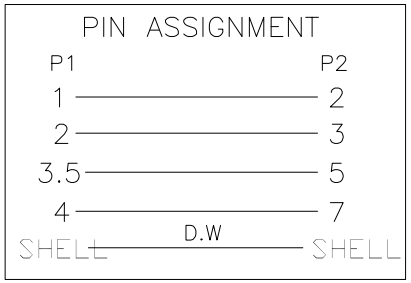

NO.	NAME	Q'TY	SPECIFICATION
⑨	TUBE	23mm	HEAT SHRINK TUBE BLACK OD1.5*L1-15mm.L2=8mm
⑧	PE BAG	1/10	CLEAR SIZE:230*300*0.05mm PRINT BLACK"MADE IN CHINA"+"10PCS".
⑦	PE BAG	1	CLEAR SIZE:100*200*0.05mm PRINT BLACK"MADE IN CHINA"+"1PC".
⑥	SCREW	2	SCREW:#4-40UNC D-E L32.5mm,NICKEL PLATED,INSULATION COLOR BEIGE(IV-29)
⑤	OUT JACKET	25.5g	BEIGE(IV-29) 40P PVC
④	IN JACKET	8g	CLEAR LDPE
③	CONN	1	DB 9PIN FEMALE PIN G/F SHELL-NICKEL SOLDER TYPE INSULATION COLOR BLACK
②	CONN	1	MINI DIN 6P/M PIN G/F SHELL-NICKEL SOLDER TYPE INSULATION COLOR BLACK
①	CABLE	1	NOUL 28AWG*4C+D.W+AL/MY JACKET:BEIGE(IV-29) OD5.0mm L=150±5mm

RoHS compliant
Unit: mm

Scale	Free					Date	Name	Customer-No.
TOLERANCE					Drawn	20.02.2017	Amy	
					Approved	20.02.2017	Amy	ASSMANN WSW-No. AB450K
DIM	TOL							Drawing-No. ASS 7885 CA rev00
		⓪	Drawn	20.02.2017	Amy			
Angle	TOL	Id.	Modification	Date	Name			Replace / Sheet

ASSMANN wsw components

Downloaded from Arrow.com.