3-to-8 Line Decoder

With 5 V-Tolerant Inputs

MC74LVX138

The MC74LVX138 is an advanced high speed CMOS 3-to-8 line decoder. The inputs tolerate voltages up to 5.5 V, allowing the interface of 5.0 V systems to 3.0 V systems.

When the device is enabled, three Binary Select inputs (A0 − A2) determine which one of the outputs ($\overline{O0}$ − $\overline{O7}$) will go Low. When enable input E3 is held Low or either $\overline{E2}$ or $\overline{E1}$ is held High, decoding function is inhibited and all outputs go high. E3, $\overline{E2}$, and $\overline{E1}$ inputs are provided to ease cascade connection and for use as an address decoder for memory systems.

Features

- High Speed: t_{PD} = 5.5 ns (Typ) at V_{CC} = 3.3 V
- Low Power Dissipation: I_{CC} = 4 μA (Max) at T_A = 25 °C
- Power Down Protection Provided on Inputs
- Balanced Propagation Delays
- Low Noise: V_{OLP} = 0.5 V (Max)
- Pin and Function Compatible with Other Standard Logic Families
- Latchup Performance Exceeds 100 mA
- ESD Performance:
  Human Body Model > 2000 V
- These Devices are Pb-Free and are RoHS Compliant

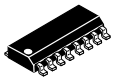

SOIC-16
D SUFFIX
CASE 751B



TSSOP-16
DT SUFFIX
CASE 948F

MARKING DIAGRAMS

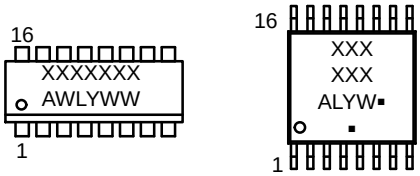

SOIC-16 **TSSOP-16**

XXXXXX = Specific Device Code
A = Assembly Location
WL, L = Wafer Lot
Y = Year
WW, W = Work Week
G or ▪ = Pb-Free Package

(Note: Microdot may be in either location)

PIN ASSIGNMENT

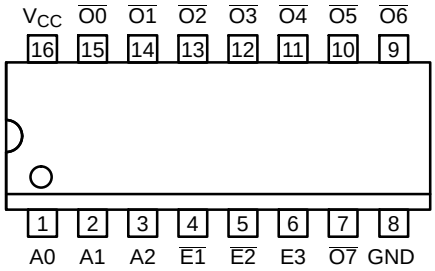

16-Lead (Top View)

PIN NAMES

Pins	Function
A0−A2	Address Inputs
$\overline{E1}$−$\overline{E2}$	Enable Inputs
E3	Enable Input
$\overline{O0}$−$\overline{O7}$	Outputs

ORDERING INFORMATION

See detailed ordering and shipping information in the package dimensions section on page 6 of this data sheet.

© Semiconductor Components Industries, LLC, 2014

Downloaded from Arrow.com.

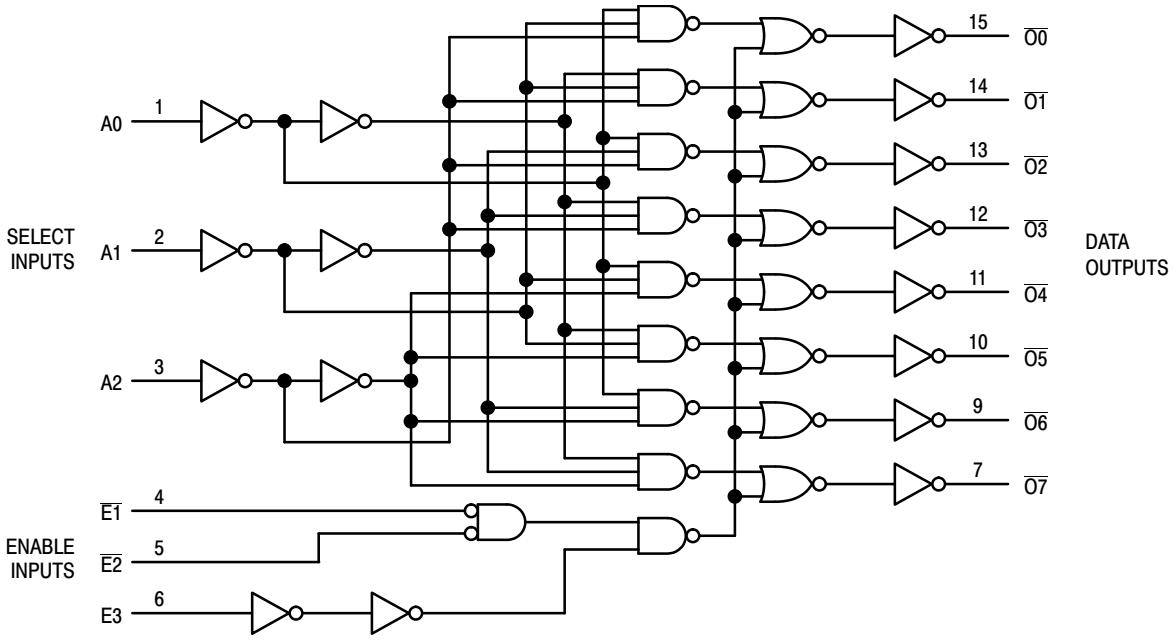

Figure 1. Logic Diagram

INPUTS						OUTPUTS							
$\overline{E1}$	$\overline{E2}$	E3	A0	A1	A2	$\overline{O0}$	$\overline{O1}$	$\overline{O2}$	$\overline{O3}$	$\overline{O4}$	$\overline{O5}$	$\overline{O6}$	$\overline{O7}$
H X X	X H X	X X L	X X X	X X X	X X X	H H H	H H H	H H H	H H H	H H H	H H H	H H H	H H H
L L L L	L L L L	H H H H	L H L H	L L H H	L L L L	L H H H	H L H H	H H L H	H H H L	H H H H	H H H H	H H H H	H H H H
L L L L	L L L L	H H H H	L H L H	L L H H	H H H H	H H H H	H H H H	H H H H	H H H H	L H H H	H L H H	H H L H	H H H L

H = High Voltage Level; L = Low Voltage Level; X = High or Low Voltage Level and Transitions Are Acceptable; For I_{CC} reasons, DO NOT FLOAT Inputs

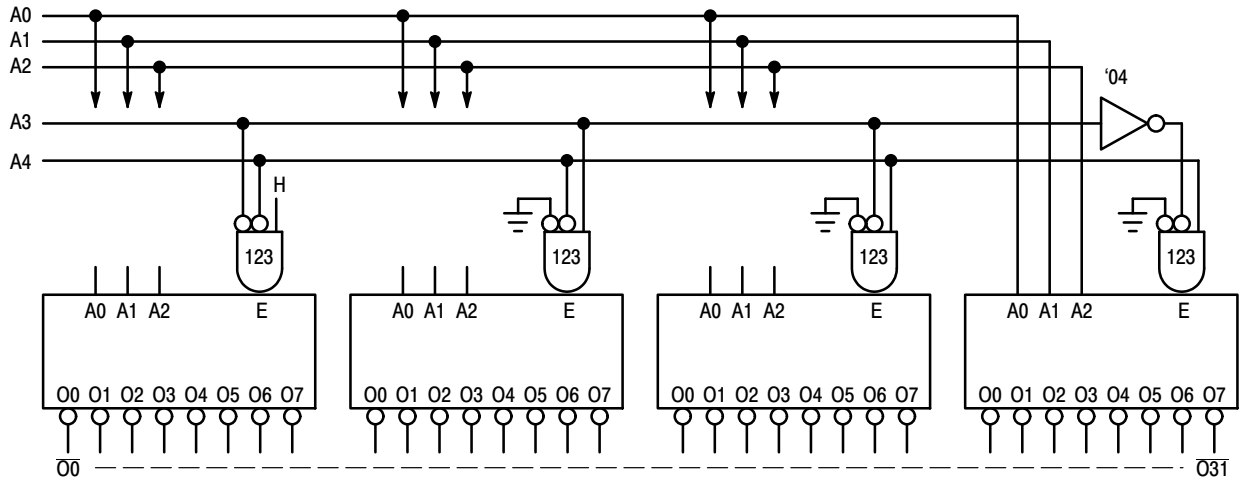

Figure 2. Expansion to 1-of-32 Decoding

Share Feedback
Your Opinion Matters

Downloaded from Arrow.com.

MAXIMUM RATINGS

Symbol	Parameter		Value	Unit
V_{CC}	DC Supply Voltage		−0.5 to +6.5	V
V_{IN}	DC Input Voltage		−0.5 to +6.5	V
V_{OUT}	DC Output Voltage		−0.5 to V_{CC} + 0.5	V
I_{IN}	DC Input Current, per Pin		±20	mA
I_{OUT}	DC Output Current, per Pin		±25	mA
I_{CC}	DC Supply Current, V_{CC} and GND Pins		±75	mA
I_{IK}	Input Clamp Current		−20	mA
I_{OK}	Output Clamp Current		±20	mA
T_{STG}	Storage Temperature Range		−65 to +150	°C
T_L	Lead Temperature, 1 mm from Case for 10 Seconds		260	°C
T_J	Junction Temperature Under Bias		+150	°C
θ_{JA}	Thermal Resistance (Note 1)	SOIC-16 TSSOP−16	126 159	°C/W
P_D	Power Dissipation in Still Air at 25 °C	SOIC-16 TSSOP−16	995 787	mW
MSL	Moisture Sensitivity		Level 1	
F_R	Flammability Rating	Oxygen Index: 28 to 34	UL 94 V-0 @ 0.125 in	
V_{ESD}	ESD Withstand Voltage (Note 2)	Human Body Model Charged Device Model	2000 N/A	V

Stresses exceeding those listed in the Maximum Ratings table may damage the device. If any of these limits are exceeded, device functionality should not be assumed, damage may occur and reliability may be affected.

1. Measured with minimum pad spacing on an FR4 board, using 76mm-by-114mm, 2-ounce copper trace no air flow per JESD51-7.
2. HBM tested to EIA / JESD22-A114-A. CDM tested to JESD22-C101-A. JEDEC recommends that ESD qualification to EIA/JESD22-A115A (Machine Model) be discontinued.

RECOMMENDED OPERATING CONDITIONS

Symbol	Parameter	Min	Max	Unit
V_{CC}	DC Supply Voltage	2.0	3.6	V
V_{in}	DC Input Voltage	0	5.5	V
V_{out}	DC Output Voltage	0	V_{CC}	V
T_A	Operating Temperature, All Package Types	−40	+85	°C
$\Delta t/\Delta V$	Input Rise and Fall Time	0	100	ns/V

Functional operation above the stresses listed in the Recommended Operating Ranges is not implied. Extended exposure to stresses beyond the Recommended Operating Ranges limits may affect device reliability.

Share Feedback
Your Opinion Matters

Downloaded from Arrow.com.

DC ELECTRICAL CHARACTERISTICS

Symbol	Parameter	Test Conditions	V_{CC} V	T_A = 25 °C			T_A = −40 to 85 °C		Unit
				Min	Typ	Max	Min	Max	
V_{IH}	High-Level Input Voltage		2.0 3.0 3.6	1.5 2.0 2.4	– – –	– – –	1.5 2.0 2.4	– – –	V
V_{IL}	Low-Level Input Voltage		2.0 3.0 3.6	– – –	– – –	0.5 0.8 0.8	– – –	0.5 0.8 0.8	V
V_{OH}	High-Level Output Voltage (V_{in} = V_{IH} or V_{IL})	I_{OH} = −50 μA I_{OH} = −50 μA I_{OH} = −4 mA	2.0 3.0 3.0	1.9 2.9 2.58	2.0 3.0 –	– – –	1.9 2.9 2.48	– – –	V
V_{OL}	Low-Level Output Voltage (V_{in} = V_{IH} or V_{IL})	I_{OL} = 50 μA I_{OL} = 50 μA I_{OL} = 4 mA	2.0 3.0 3.0	– – –	0.0 0.0 –	0.1 0.1 0.36	– – –	0.1 0.1 0.44	V
I_{in}	Input Leakage Current	V_{in} = 5.5 V or GND	3.6	–	–	±0.1	–	±1.0	μA
I_{CC}	Quiescent Supply Current	V_{in} = V_{CC} or GND	3.6	–	–	4.0	–	40.0	μA

Product parametric performance is indicated in the Electrical Characteristics for the listed test conditions, unless otherwise noted. Product performance may not be indicated by the Electrical Characteristics if operated under different conditions.

AC ELECTRICAL CHARACTERISTICS (Input t_r = t_f = 3.0 ns)

Symbol	Parameter	Test Conditions		T_A = 25 °C			T_A = −40 to 85 °C		Unit
				Min	Typ	Max	Min	Max	
t_{PLH}, t_{PHL}	Propagation Delay Input to Output	V_{CC} = 2.7 V	C_L = 15 pF C_L = 50 pF	– –	7.1 9.6	13.8 17.3	1.0 1.0	16.5 20.0	ns
		V_{CC} = 3.3 ± 0.3 V	C_L = 15 pF C_L = 50 pF	– –	5.5 8.0	8.8 12.3	1.0 1.0	10.5 14.0	
t_{PLH}, t_{PHL}	Propagation Delay E3 to $\overline{O}$	V_{CC} = 2.7 V	C_L = 15 pF C_L = 50 pF	– –	8.7 11.2	16.3 19.8	1.0 1.0	19.5 23.0	ns
		V_{CC} = 3.3 ± 0.3 V	C_L = 15 pF C_L = 50 pF	– –	6.8 9.3	10.6 14.1	1.0 1.0	12.5 16.0	
t_{PLH}, t_{PHL}	Propagation Delay $\overline{E1}$ or $\overline{E2}$ to $\overline{O}$	V_{CC} = 2.7 V	C_L = 15 pF C_L = 50 pF	– –	8.8 11.3	16.0 19.5	1.0 1.0	18.5 22.0	ns
		V_{CC} = 3.3 ± 0.3 V	C_L = 15 pF C_L = 50 pF	– –	6.9 9.4	10.4 13.9	1.0 1.0	11.5 15.0	
t_{OSHL} t_{OSLH}	Output-to-Output Skew (Note 1)	V_{CC} = 2.7 V V_{CC} = 3.3 ± 0.3 V	C_L = 50 pF C_L = 50 pF	– –	– –	2.5 2.5	– –	2.5 2.5	ns

1. Skew is defined as the absolute value of the difference between the actual propagation delay for any two separate outputs of the same device. The specification applies to any outputs switching in the same direction, either HIGH-to-LOW (t_{OSHL}) or LOW-to-HIGH (t_{OSLH}); parameter guaranteed by design.

CAPACITIVE CHARACTERISTICS

Symbol	Parameter	T_A = 25 °C			T_A = −40 to 85 °C		Unit
		Min	Typ	Max	Min	Max	
Cin	Input Capacitance	–	4	10	–	10	pF
C_{PD}	Power Dissipation Capacitance (Note 2)	–	34	–	–	–	pF

2. C_{PD} is defined as the value of the internal equivalent capacitance which is calculated from the operating current consumption without load. Average operating current can be obtained by the equation: $I_{CC(OPR)} = C_{PD} \bullet V_{CC} \bullet f_{in} + I_{CC}$. C_{PD} is used to determine the no-load dynamic power consumption; $P_D = C_{PD} \bullet V_{CC}^2 \bullet f_{in} + I_{CC} \bullet V_{CC}$.

Share Feedback
Your Opinion Matters

Downloaded from Arrow.com.

NOISE CHARACTERISTICS (Input $t_r = t_f = 3.0$ ns, $C_L = 50$ pF, $V_{CC} = 3.3$ V)

Symbol	Characteristic	$T_A = 25$ °C		Unit
		Typ	Max	
V_{OLP}	Quiet Output Maximum Dynamic V_{OL}	−	0.5	V
V_{OLV}	Quiet Output Minimum Dynamic V_{OL}	−	−0.5	V
V_{IHD}	Minimum High Level Dynamic Input Voltage	−	2.0	V
V_{ILD}	Maximum Low Level Dynamic Input Voltage	−	0.8	V

Share Feedback
Your Opinion Matters

Downloaded from Arrow.com.

SWITCHING WAVEFORMS

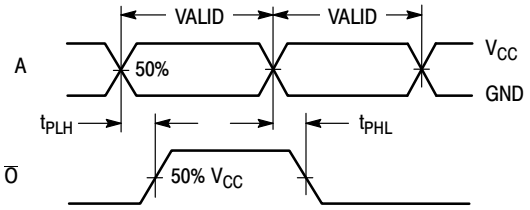

Figure 3. .

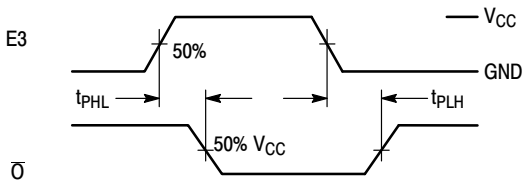

Figure 4. .

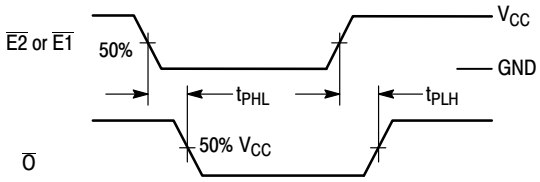

Figure 5.

TEST CIRCUIT

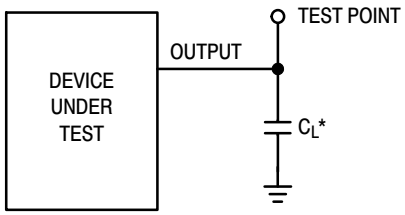

*Includes all probe and jig capacitance

Figure 6.

ORDERING INFORMATION

Device	Marking	Package	Shipping†
MC74LVX138DR2G	LVX138G	SOIC-16 (Pb-Free)	2500 Tape & Reel
MC74LVX138DTR2G	LVX 138	TSSOP-16 (Pb-Free)	2500 Tape & Reel

†For information on tape and reel specifications, including part orientation and tape sizes, please refer to our Tape and Reel Packaging Specifications Brochure, BRD8011/D.

Share Feedback
Your Opinion Matters

Downloaded from Arrow.com.

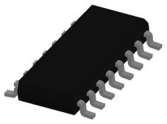

SOIC−16 9.90x3.90x1.37 1.27P
CASE 751B
ISSUE M

DATE 18 OCT 2024

NOTES:
1. DIMENSIONING AND TOLERANCING PER ASME Y14.5M, 2018.
2. DIMENSION IN MILLIMETERS. ANGLE IN DEGREES.
3. DIMENSIONS D AND E1 DO NOT INCLUDE MOLD PROTRUSION.
4. MAXIMUM MOLD PROTRUSION 0.15mm PER SIDE.
5. DIMENSION b DOES NOT INCLUDE DAMBAR PROTRUSION. ALLOWABLE DAMBAR PROTRUSION SHALL BE 0.127mm TOTAL IN EXCESS OF THE b DIMENSION AT MAXIMUM MATERIAL CONDITION.

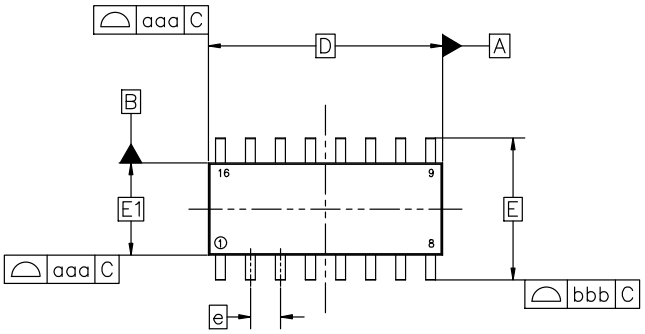

TOP VIEW

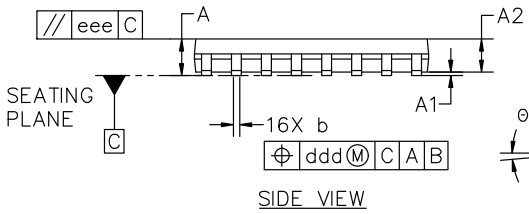

SIDE VIEW

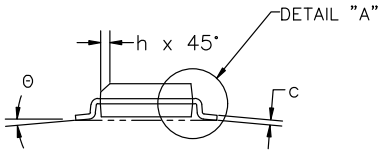

END VIEW

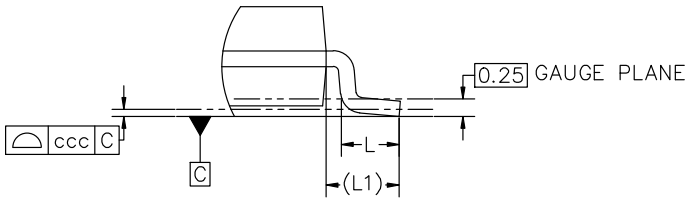

DETAIL "A"
Scale 3:1

MILLIMETERS			
DIM	MIN	NOM	MAX
A	1.35	1.55	1.75
A1	0.10	0.18	0.25
A2	1.25	1.37	1.50
b	0.35	0.42	0.49
c	0.19	0.22	0.25
D	9.90 BSC		
E	6.00 BSC		
E1	3.90 BSC		
e	1.27 BSC		
h	0.25	−−−	0.50
L	0.40	0.83	1.25
L1	1.05 REF		
Θ	0°	−−−	7°
TOLERANCE OF FORM AND POSITION			
aaa	0.10		
bbb	0.20		
ccc	0.10		
ddd	0.25		
eee	0.10		

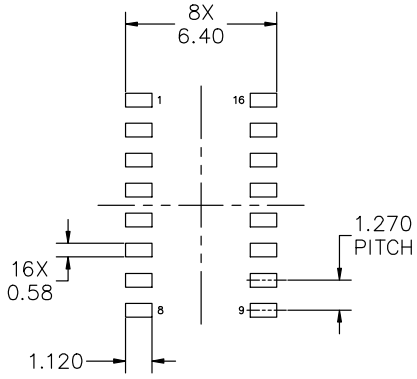

RECOMMENDED MOUNTING FOOTPRINT

*FOR ADDITIONAL INFORMATION ON OUR PB−FREE STRATEGY AND SOLDERING DETAILS, PLEASE DOWNLOAD THE onsemi SOLDERING AND MOUNTING TECHNIQUES REFERENCE MANUAL, SOLDERRM/D

DOCUMENT NUMBER:	**98ASB42566B**	Electronic versions are uncontrolled except when accessed directly from the Document Repository. Printed versions are uncontrolled except when stamped "CONTROLLED COPY" in red.	
DESCRIPTION:	**SOIC−16 9.90X3.90X1.37 1.27P**		**PAGE 1 OF 2**

onsemi and onsemi are trademarks of Semiconductor Components Industries, LLC dba **onsemi** or its subsidiaries in the United States and/or other countries. **onsemi** reserves the right to make changes without further notice to any products herein. **onsemi** makes no warranty, representation or guarantee regarding the suitability of its products for any particular purpose, nor does **onsemi** assume any liability arising out of the application or use of any product or circuit, and specifically disclaims any and all liability, including without limitation special, consequential or incidental damages. **onsemi** does not convey any license under its patent rights nor the rights of others.

© Semiconductor Components Industries, LLC, 2019

Downloaded from Arrow.com.

SOIC−16 9.90x3.90x1.37 1.27P
CASE 751B
ISSUE M

DATE 18 OCT 2024

GENERIC MARKING DIAGRAM*

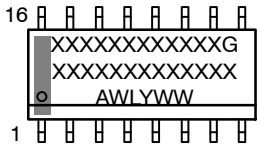

XXXXX = Specific Device Code
A = Assembly Location
WL = Wafer Lot
Y = Year
WW = Work Week
G = Pb−Free Package

*This information is generic. Please refer to device data sheet for actual part marking. Pb−Free indicator, “G” or microdot “▪”, may or may not be present. Some products may not follow the Generic Marking.

STYLE 1:

PIN 1.	COLLECTOR
2.	BASE
3.	EMITTER
4.	NO CONNECTION
5.	EMITTER
6.	BASE
7.	COLLECTOR
8.	COLLECTOR
9.	BASE
10.	EMITTER
11.	NO CONNECTION
12.	EMITTER
13.	BASE
14.	COLLECTOR
15.	EMITTER
16.	COLLECTOR

STYLE 2:

PIN 1.	CATHODE
2.	ANODE
3.	NO CONNECTION
4.	CATHODE
5.	CATHODE
6.	NO CONNECTION
7.	ANODE
8.	CATHODE
9.	CATHODE
10.	ANODE
11.	NO CONNECTION
12.	CATHODE
13.	CATHODE
14.	NO CONNECTION
15.	ANODE
16.	CATHODE

STYLE 3:

PIN 1.	COLLECTOR, DYE #1
2.	BASE, #1
3.	EMITTER, #1
4.	COLLECTOR, #1
5.	COLLECTOR, #2
6.	BASE, #2
7.	EMITTER, #2
8.	COLLECTOR, #2
9.	COLLECTOR, #3
10.	BASE, #3
11.	EMITTER, #3
12.	COLLECTOR, #3
13.	COLLECTOR, #4
14.	BASE, #4
15.	EMITTER, #4
16.	COLLECTOR, #4

STYLE 4:

PIN 1.	COLLECTOR, DYE #1
2.	COLLECTOR, #1
3.	COLLECTOR, #2
4.	COLLECTOR, #2
5.	COLLECTOR, #3
6.	COLLECTOR, #3
7.	COLLECTOR, #4
8.	COLLECTOR, #4
9.	BASE, #4
10.	EMITTER, #4
11.	BASE, #3
12.	EMITTER, #3
13.	BASE, #2
14.	EMITTER, #2
15.	BASE, #1
16.	EMITTER, #1

STYLE 5:

PIN 1.	DRAIN, DYE #1
2.	DRAIN, #1
3.	DRAIN, #2
4.	DRAIN, #2
5.	DRAIN, #3
6.	DRAIN, #3
7.	DRAIN, #4
8.	DRAIN, #4
9.	GATE, #4
10.	SOURCE, #4
11.	GATE, #3
12.	SOURCE, #3
13.	GATE, #2
14.	SOURCE, #2
15.	GATE, #1
16.	SOURCE, #1

STYLE 6:

PIN 1.	CATHODE
2.	CATHODE
3.	CATHODE
4.	CATHODE
5.	CATHODE
6.	CATHODE
7.	CATHODE
8.	CATHODE
9.	ANODE
10.	ANODE
11.	ANODE
12.	ANODE
13.	ANODE
14.	ANODE
15.	ANODE
16.	ANODE

STYLE 7:

PIN 1.	SOURCE N-CH
2.	COMMON DRAIN (OUTPUT)
3.	COMMON DRAIN (OUTPUT)
4.	GATE P-CH
5.	COMMON DRAIN (OUTPUT)
6.	COMMON DRAIN (OUTPUT)
7.	COMMON DRAIN (OUTPUT)
8.	SOURCE P-CH
9.	SOURCE P-CH
10.	COMMON DRAIN (OUTPUT)
11.	COMMON DRAIN (OUTPUT)
12.	COMMON DRAIN (OUTPUT)
13.	GATE N-CH
14.	COMMON DRAIN (OUTPUT)
15.	COMMON DRAIN (OUTPUT)
16.	SOURCE N-CH

onsemi and ONSEMI are trademarks of Semiconductor Components Industries, LLC dba **onsemi** or its subsidiaries in the United States and/or other countries. **onsemi** reserves the right to make changes without further notice to any products herein. **onsemi** makes no warranty, representation or guarantee regarding the suitability of its products for any particular purpose, nor does **onsemi** assume any liability arising out of the application or use of any product or circuit, and specifically disclaims any and all liability, including without limitation special, consequential or incidental damages. **onsemi** does not convey any license under its patent rights nor the rights of others.

© Semiconductor Components Industries, LLC, 2019

Downloaded from Arrow.com.

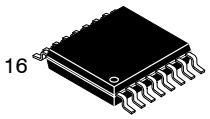

SCALE 2:1

TSSOP−16 WB
CASE 948F
ISSUE B

DATE 19 OCT 2006

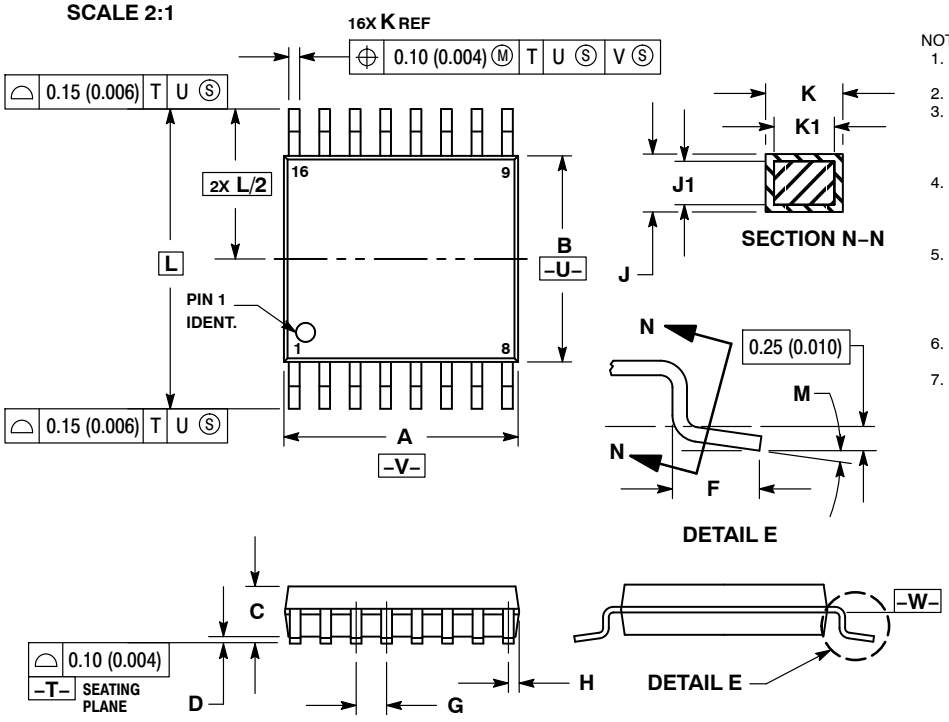

NOTES:
1. DIMENSIONING AND TOLERANCING PER ANSI Y14.5M, 1982.
2. CONTROLLING DIMENSION: MILLIMETER.
3. DIMENSION A DOES NOT INCLUDE MOLD FLASH. PROTRUSIONS OR GATE BURRS. MOLD FLASH OR GATE BURRS SHALL NOT EXCEED 0.15 (0.006) PER SIDE.
4. DIMENSION B DOES NOT INCLUDE INTERLEAD FLASH OR PROTRUSION. INTERLEAD FLASH OR PROTRUSION SHALL NOT EXCEED 0.25 (0.010) PER SIDE.
5. DIMENSION K DOES NOT INCLUDE DAMBAR PROTRUSION. ALLOWABLE DAMBAR PROTRUSION SHALL BE 0.08 (0.003) TOTAL IN EXCESS OF THE K DIMENSION AT MAXIMUM MATERIAL CONDITION.
6. TERMINAL NUMBERS ARE SHOWN FOR REFERENCE ONLY.
7. DIMENSION A AND B ARE TO BE DETERMINED AT DATUM PLANE −W−.

	MILLIMETERS		INCHES	
DIM	MIN	MAX	MIN	MAX
A	4.90	5.10	0.193	0.200
B	4.30	4.50	0.169	0.177
C	−−−	1.20	−−−	0.047
D	0.05	0.15	0.002	0.006
F	0.50	0.75	0.020	0.030
G	0.65 BSC		0.026 BSC	
H	0.18	0.28	0.007	0.011
J	0.09	0.20	0.004	0.008
J1	0.09	0.16	0.004	0.006
K	0.19	0.30	0.007	0.012
K1	0.19	0.25	0.007	0.010
L	6.40 BSC		0.252 BSC	
M	0 °	8 °	0 °	8 °

RECOMMENDED SOLDERING FOOTPRINT*

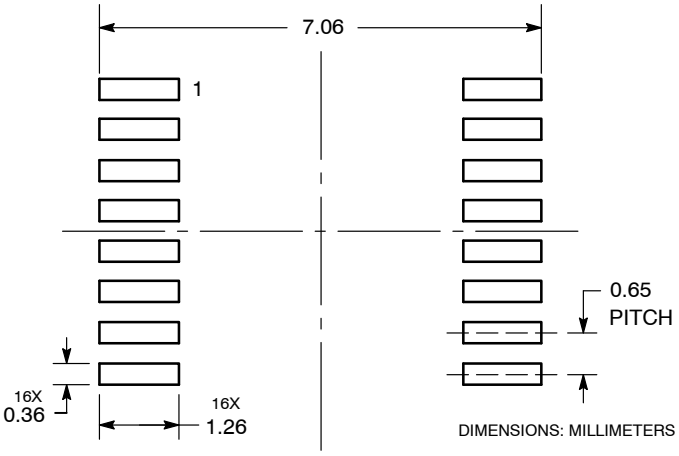

*For additional information on our Pb−Free strategy and soldering details, please download the **onsemi** Soldering and Mounting Techniques Reference Manual, SOLDERRM/D.

GENERIC MARKING DIAGRAM*

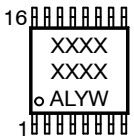

XXXX	= Specific Device Code
A	= Assembly Location
L	= Wafer Lot
Y	= Year
W	= Work Week
G or ▪	= Pb−Free Package

*This information is generic. Please refer to device data sheet for actual part marking. Pb−Free indicator, “G” or microdot “ ▪”, may or may not be present. Some products may not follow the Generic Marking.

DOCUMENT NUMBER:	**98ASH70247A**	Electronic versions are uncontrolled except when accessed directly from the Document Repository. Printed versions are uncontrolled except when stamped “CONTROLLED COPY” in red.
DESCRIPTION:	**TSSOP−16**	**PAGE 1 OF 1**

onsemi and onsemi are trademarks of Semiconductor Components Industries, LLC dba **onsemi** or its subsidiaries in the United States and/or other countries. **onsemi** reserves the right to make changes without further notice to any products herein. **onsemi** makes no warranty, representation or guarantee regarding the suitability of its products for any particular purpose, nor does **onsemi** assume any liability arising out of the application or use of any product or circuit, and specifically disclaims any and all liability, including without limitation special, consequential or incidental damages. **onsemi** does not convey any license under its patent rights nor the rights of others.

Downloaded from Arrow.com.

onsemi, ONSEMI , and other names, marks, and brands are registered and/or common law trademarks of Semiconductor Components Industries, LLC dba "**onsemi**" or its affiliates and/or subsidiaries in the United States and/or other countries. **onsemi** owns the rights to a number of patents, trademarks, copyrights, trade secrets, and other intellectual property. A listing of **onsemi**'s product/patent coverage may be accessed at www.onsemi.com/site/pdf/Patent−Marking.pdf. **onsemi** reserves the right to make changes at any time to any products or information herein, without notice. The information herein is provided "as−is" and **onsemi** makes no warranty, representation or guarantee regarding the accuracy of the information, product features, availability, functionality, or suitability of its products for any particular purpose, nor does **onsemi** assume any liability arising out of the application or use of any product or circuit, and specifically disclaims any and all liability, including without limitation special, consequential or incidental damages. Buyer is responsible for its products and applications using **onsemi** products, including compliance with all laws, regulations and safety requirements or standards, regardless of any support or applications information provided by **onsemi**. "Typical" parameters which may be provided in **onsemi** data sheets and/or specifications can and do vary in different applications and actual performance may vary over time. All operating parameters, including "Typicals" must be validated for each customer application by customer's technical experts. **onsemi** does not convey any license under any of its intellectual property rights nor the rights of others. **onsemi** products are not designed, intended, or authorized for use as a critical component in life support systems or any FDA Class 3 medical devices or medical devices with a same or similar classification in a foreign jurisdiction or any devices intended for implantation in the human body. Should Buyer purchase or use **onsemi** products for any such unintended or unauthorized application, Buyer shall indemnify and hold **onsemi** and its officers, employees, subsidiaries, affiliates, and distributors harmless against all claims, costs, damages, and expenses, and reasonable attorney fees arising out of, directly or indirectly, any claim of personal injury or death associated with such unintended or unauthorized use, even if such claim alleges that **onsemi** was negligent regarding the design or manufacture of the part. **onsemi** is an Equal Opportunity/Affirmative Action Employer. This literature is subject to all applicable copyright laws and is not for resale in any manner.

ADDITIONAL INFORMATION

TECHNICAL PUBLICATIONS:
Technical Library: www.onsemi.com/design/resources/technical−documentation
onsemi Website: www.onsemi.com

ONLINE SUPPORT: www.onsemi.com/support
For additional information, please contact your local Sales Representative at www.onsemi.com/support/sales

◊

Downloaded from Arrow.com.