3 Amp V_{TT} Termination Regulator DDR1, DDR2, DDR3, LPDDR3, DDR4

NCP51400, NCV51400

The NCP51400 is a source/sink Double Data Rate (DDR) termination regulator specifically designed for low input voltage and low−noise systems where space is a key consideration.

The NCP51400 maintains a fast transient response and only requires a minimum output capacitance of 20 μF. The NCP51400 supports a remote sensing function and all power requirements for DDR V_{TT} bus termination. The NCP51400 can also be used in low−power chipsets and graphics processor cores that require dynamically adjustable output voltages.

The NCP51400 is available in the thermally−efficient DFN10 Exposed Pad package, and is rated both Green and Pb−free.

Features

- For Automotive Applications
- Input Voltage Rails: Supports 2.5 V, 3.3 V and 5 V Rails
- PV_{CC} Voltage Range: 1.1 V to 3.5 V
- Integrated Power MOSFETs
- Fast Load−Transient Response
- P_{GOOD} − Logic output pin to Monitor V_{TT} Regulation
- EN − Logic input pin for Shutdown mode
- V_{RI} − Reference Input Allows for Flexible Input Tracking Either Directly or Through Resistor Divider
- Remote Sensing (V_{TTS})
- Built−in Soft Start, Under Voltage Lockout and Over Current Limit
- Thermal Shutdown
- Small, Low−Profile 10−pin, 3x3 DFN Package
- NCV51400MWTXG − Wettable Flank Option for Enhanced Optical Inspection
- NCV Prefix for Automotive and Other Applications Requiring Unique Site and Control Change Requirements; AEC−Q100 Qualified and PPAP Capable*
- These Devices are Pb−Free and are RoHS Compliant

Applications

- DDR Memory Termination
- Desktop PC's, Notebooks, and Workstations
- Servers and Networking equipment
- Telecom/Datacom, GSM Base Station
- Graphics Processor Core Supplies
- Set Top Boxes, LCD−TV/PDP−TV, Copier/Printers
- Chipset/RAM Supplies as Low as 0.5 V
- Active Bus Termination



DFN10, 3x3, 0.5P
CASE 506CL

MARKING DIAGRAM



51400	= Specific Device Code
A	= Assembly Location
L	= Wafer Lot (Optional character)
Y	= Year
W	= Work Week
▪	= Pb−Free Package

(Note: Microdot may be in either location)

PIN CONNECTION

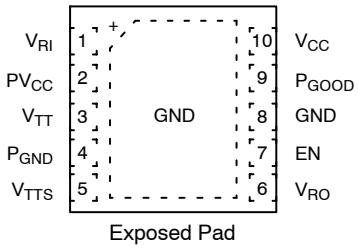

ORDERING INFORMATION

Device	Package	Shipping†
NCP51400MNTXG	DFN10 (Pb−Free)	3000 / Tape & Reel
NCV51400MNTXG*		
NCV51400MWTXG*		

†For information on tape and reel specifications, including part orientation and tape sizes, please refer to our Tape and Reel Packaging Specifications Brochure, BRD8011/D.

© Semiconductor Components Industries, LLC, 2016

Downloaded from Arrow.com.

PIN FUNCTION DESCRIPTION

Pin Number	Pin Name	Pin Function
1	V_{RI}	V_{TT} External Reference Input (set to V_{DDQ} / 2 thru resistor network).
2	PV_{CC}	Power input. Internally connected to the output source MOSFET.
3	V_{TT}	Power Output of the Linear Regulator.
4	P_{GND}	Power Ground. Internally connected to the output sink MOSFET.
5	V_{TTS}	V_{TT} Sense Input. The V_{TTS} pin provides accurate remote feedback sensing of V_{TT}. Connect V_{TTS} to the remote DDR termination bypass capacitors.
6	V_{RO}	Independent Buffered V_{TT} Reference Output. Sources and sinks over 5 mA. Connect to GND thru 0.1 μF ceramic capacitor.
7	EN	Shutdown Control Input. CMOS compatible input. Logic high = enable, logic low = shutdown. Connect to V_{DDQ} for normal operation.
8	GND	Common Ground.
9	P_{GOOD}	Power Good (Open Drain output).
10	V_{CC}	Analog power supply input. Connect to GND thru a 1 – 4.7 μF ceramic capacitor.
	THERMAL PAD	Pad for thermal connection. The exposed pad must be connected to the ground plane using multiple vias for maximum power dissipation performance.

ABSOLUTE MAXIMUM RATINGS

Rating	Symbol	Value	Unit
V_{CC}, PV_{CC}, V_{TT}, V_{TTS}, V_{RI}, V_{RO} (Note 1)		−0.3 to 6.0	V
EN, P_{GOOD} (Note 1)		−0.3 to 6.0	V
P_{GND} to GND (Note 1)		−0.3 to +0.3	V
Storage Temperature	T_{STG}	−55 to 150	°C
Operating Junction Temperature Range	T_J	150	°C
ESD Capability, Human Body Model (Note 2)	ESD_{HBM}	2000	V

Stresses exceeding those listed in the Maximum Ratings table may damage the device. If any of these limits are exceeded, device functionality should not be assumed, damage may occur and reliability may be affected.

1. Refer to ELECTRICAL CHARACTERISTICS and APPLICATION INFORMATION for Safe Operating Area.
2. This device series incorporates ESD protection and is tested by the following method:
   ESD Human Body Model tested per AEC−Q100−002 (EIA/JESD22−A114)
   ESD Machine Model tested per AEC−Q100−003 (EIA/JESD22−A115)
   Latchup Current Maximum Rating tested per JEDEC standard: JESD78.

DISSIPATION RATINGS

Package	T_A = 25°C Power Rating	Derating Factor above T_A = 25°C	T_A = +85°C Power Rating
10−Pin DFN	1.92 W	19 mW/°C	0.79 W

THERMAL INFORMATION

Symbol	Thermal Metric	NCP51400 (*) DFN 3x3mm 10 pins	Unit
$R_{\theta JA}$	Junction−to−ambient thermal resistance	53.9	°C/W
$R_{\theta JC(top)}$	Junction−to−case (top) thermal resistance	95.5	°C/W
$R_{\theta JB}$	Junction−to−board thermal resistance (1mm from package)	32.3	°C/W
Ψ_{JT}	Junction−to−top thermal resistance	4.3	°C/W
Ψ_{JB}	Junction−to−board thermal resistance (1mm from package)	32.3	°C/W
$R_{\theta JC(bot)}$	Junction−to−case (bot) thermal resistance	14.2	°C/W

*1S2P JEDEC JESD51−7 PCB with 240 sqmm, 2 oz copper heat spreader.

Share Feedback
Your Opinion Matters

Downloaded from Arrow.com.

RECOMMENED OPERATING CONDITIONS

Rating	Symbol	Value	Unit
Supply Voltage	V_{CC}	2.375 to 5.5	V
Voltage Range	V_{RO}	−0.1 to 1.8	V
	V_{RI}	0.5 to 1.8	
	PV_{CC}, V_{TT}, V_{TTS}, EN, P_{GOOD}	−0.1 to 3.5	
	P_{GND}	−0.1 to +0.1	
Operating Free−Air Temperature	T_A	−40 to +125	°C

Functional operation above the stresses listed in the Recommended Operating Ranges is not implied. Extended exposure to stresses beyond the Recommended Operating Ranges limits may affect device reliability.

ELECTRICAL CHARACTERISTICS

$-40°C \le T_A \le 125°C$; V_{CC} = 3.3 V; PV_{CC} = 1.8 V; V_{RI} = V_{TTS} = 0.9 V; EN = V_{CC}; C_{OUT} = 3 x 10 μF (Ceramic); unless otherwise noted.

Parameter	Conditions	Symbol	Min	Typ	Max	Unit
Supply Current						
V_{CC} Supply Current	T_A = +25°C, EN = 3.3 V, No Load	I_{VCC}		0.7	1	mA
V_{CC} Shutdown Current	T_A = +25°C, EN = 0 V, V_{RI} = 0 V, No Load	$I_{VCC\ SHD}$		65	80	μA
	T_A = +25°C, EN = 0 V, V_{RI} > 0.4 V, No Load			200	400	
V_{CC} UVLO Threshold	Wake−up, T_A = +25°C	V_{UVLO}	2.15	2.3	2.375	V
	Hysteresis			50		mV
PV_{CC} Supply Current	T_A = +25°C, EN = 3.3 V, No Load	I_{PVCC}		1	50	μA
PV_{CC} Shutdown Current	T_A = +25°C, EN = 0 V, No Load	$I_{PVCC\ SHD}$		0.1	50	μA
V_{TT} Output						
V_{TT} Output DC Voltage	PV_{CC} = 1.50 V, V_{RO} = 0.75 V, I_{TT} = 0 A	V_{OS}		0.75		V
	PV_{CC} = 1.35 V, V_{RO} = 0.675 V, I_{TT} = 0 A			0.675		
	PV_{CC} = 1.20 V, V_{RO} = 0.60 V, I_{TT} = 0 A			0.60		
V_{TT} Output Voltage Tolerance to V_{RO}	PV_{CC} = 1.50 V, V_{RO} = 0.75 V, −2 A < I_{TT} < 2 A			±18		mV
	PV_{CC} = 1.35 V, V_{RO} = 0.675 V, −2 A < I_{TT} < 2 A			±20		
	PV_{CC} = 1.20 V, V_{RO} = 0.60 V, −2 A < I_{TT} < 2 A			±20		
Source Current Limit	V_{TTS} = 90% * V_{RO}		3		4.5	A
Sink Current Limit	V_{TTS} = 110% * V_{RO}		3.5		5.5	A
Soft−start Current Limit Timeout		T_{SS}		200		μs
Discharge MOSFET On−resistance	V_{RI} = 0 V, V_{TT} = 0.3 V, EN = 0 V, T_A = +25°C	R_{DIS}		18	25	Ω
V_{RI} − Input Reference						
V_{RI} Voltage Range		V_{RI}	0.5		1.8	V
V_{RI} Input−bias Current	EN = 3.3 V	I_{RI}			+1	μA
V_{RI} UVLO Voltage	V_{RI} rising	$V_{RI\ UVLO}$	360	390	435	mV
	Hysteresis	$V_{RI\ HYS}$		60		
V_{RO} − Output Reference						
V_{RO} Voltage				V_{RI}		V

Share Feedback
Your Opinion Matters

Downloaded from Arrow.com.

ELECTRICAL CHARACTERISTICS

$-40°C \le T_A \le 125°C$; V_{CC} = 3.3 V; PV_{CC} = 1.8 V; $V_{RI} = V_{TTS}$ = 0.9 V; EN = V_{CC}; C_{OUT} = 3 x 10 μF (Ceramic); unless otherwise noted.

Parameter	Conditions	Symbol	Min	Typ	Max	Unit
V_{RO} Voltage Tolerance to V_{RI}	−10 mA < I_{RO} < 10 mA, V_{RI} = 1.25 V		−15		+15	mV
	−10 mA < I_{RO} < 10 mA, V_{RI} = 0.9 V		−15		+15	
	−10 mA < I_{RO} < 10 mA, V_{RI} = 0.75 V		−15		+15	
	−10 mA < I_{RO} < 10 mA, V_{RI} = 0.6 V		−15		+15	
V_{RO} Source Current Limit	V_{RO} = 0 V		10	40		mA
V_{RO} Sink Current Limit	V_{RO} = 0 V		10	40		mA
P_{GOOD} − Powergood Comparator						
P_{GOOD} Lower Threshold	(with respect to V_{RO})		−23.5 %	−20%	−17.5 %	V/V
P_{GOOD} Upper Threshold	(with respect to V_{RO})		17.5%	20%	23.5%	
P_{GOOD} Hysteresis				5%		
P_{GOOD} Start−up Delay	Start−up rising edge, V_{TTS} within 15% of V_{RO}			2		ms
P_{GOOD} Leakage Current	$V_{TTS} = V_{RI}$ (P_{GOOD} = True) $P_{GOOD} = V_{CC}$ + 0.2 V				1	μA
P_{GOOD} = False Delay	V_{TTS} is beyond ±20% P_{GOOD} trip thresholds			10		μs
P_{GOOD} Output Low Voltage	I_{GOOD} = 4 mA				0.4	V
EN − Enable Logic						
Logic Input Threshold	EN Logic high	V_{IH}	1.7			V
	EN Logic low	V_{IL}			0.3	
Hysteresis Voltage	EN pin	V_{ENHYS}		0.5		V
Logic Leakage Current	EN pin, T_A = +25°C	I_{ILEAK}	−1		+1	μA
Thermal Shutdown						
Thermal Shutdown Temperature		T_{SD}		150		°C
Thermal Shutdown Hysteresis		T_{SH}		25		°C

Product parametric performance is indicated in the Electrical Characteristics for the listed test conditions, unless otherwise noted. Product performance may not be indicated by the Electrical Characteristics if operated under different conditions.

Share Feedback
Your Opinion Matters

Downloaded from Arrow.com.

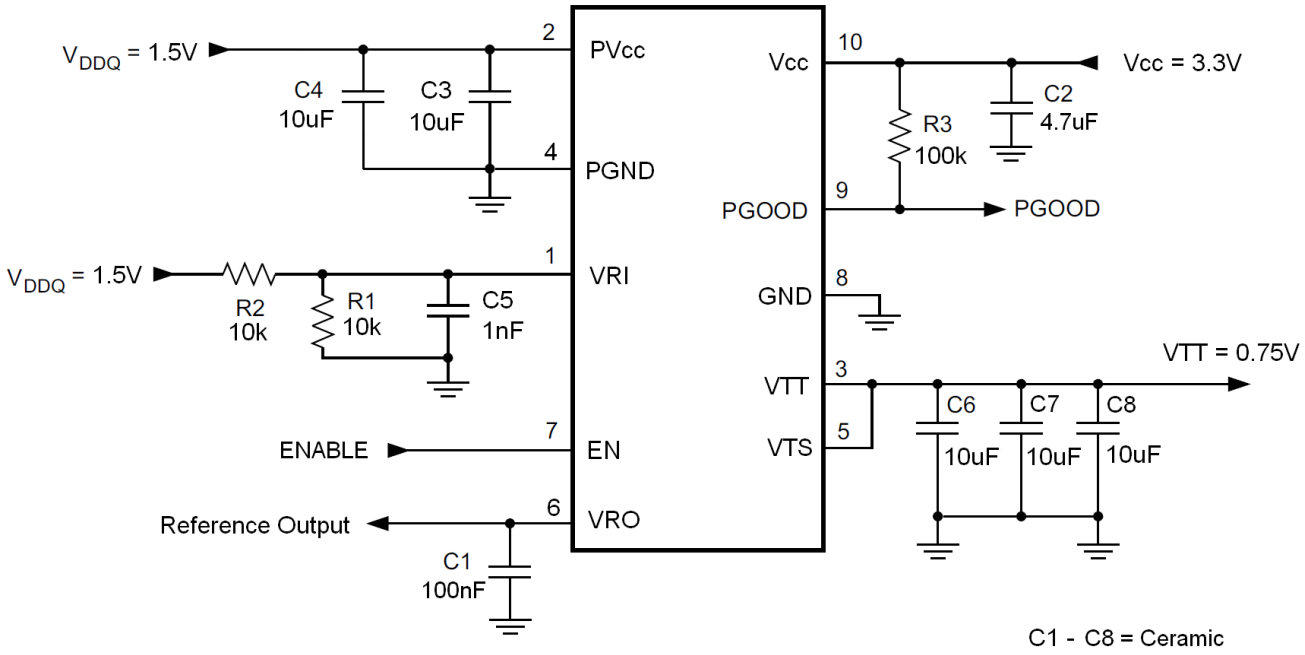

Figure 1. Typical DDR−3 Application Schematic

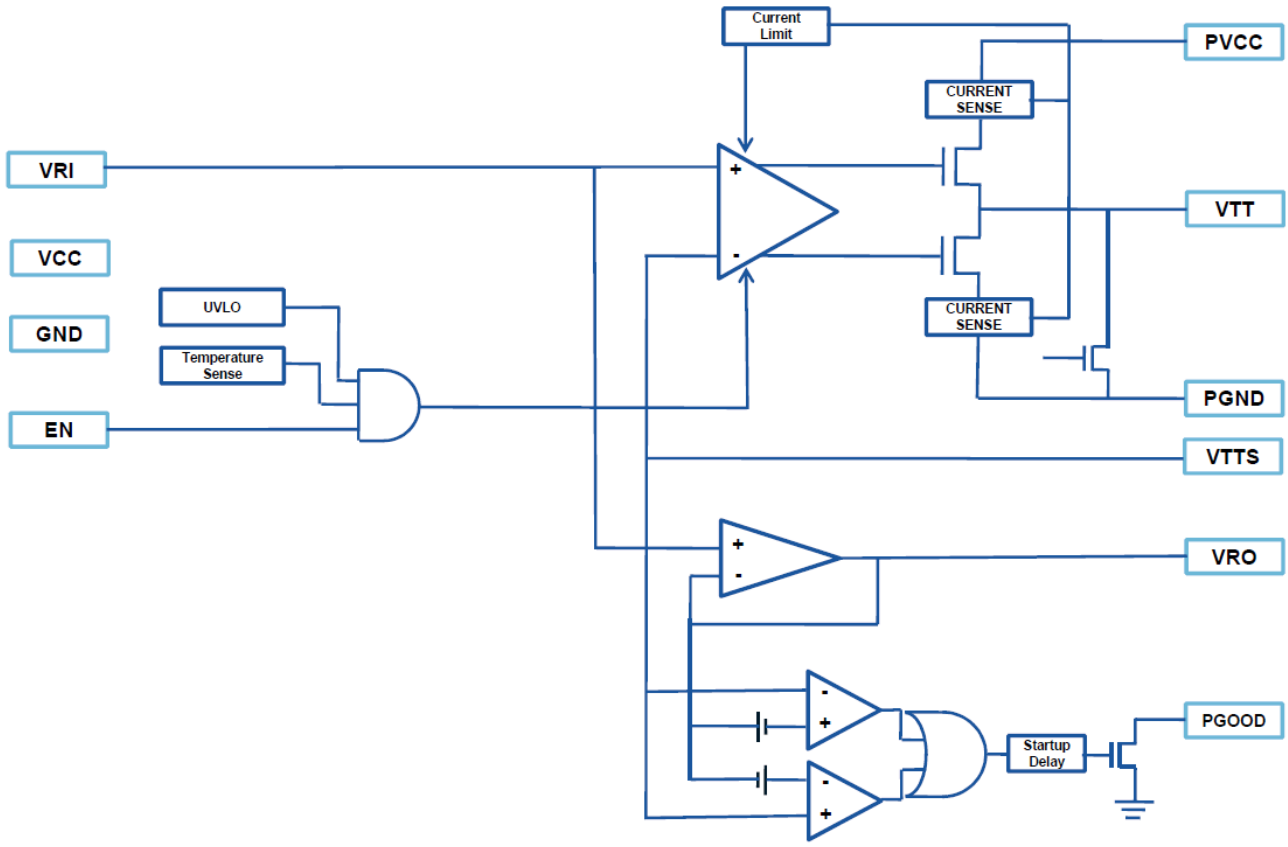

Figure 2. Block Diagram

Share Feedback
Your Opinion Matters

Downloaded from Arrow.com.

General

The NCP51400 is a sink/source tracking termination regulator specifically designed for low input voltage and low external component count systems where space is a key application parameter. The NCP51400 integrates a high−performance, low−dropout (LDO) linear regulator that is capable of both sourcing and sinking current. The LDO regulator employs a fast feedback loop so that small ceramic capacitors can be used to support the fast load transient response. To achieve tight regulation with minimum effect of trace resistance, a remote sensing terminal, V_{TTS}, should be connected to the positive terminal of the output capacitors as a separate trace from the high current path from V_{TT}.

V_{RI} − Generation of Internal Voltage Reference

The output voltage, V_{TT}, is regulated to V_{RO}. When V_{RI} is configured for standard DDR termination applications, V_{RI} can be set by an external equivalent ratio voltage divider connected to the memory supply bus (V_{DDQ}). The NCP51400 supports V_{RI} voltage from 0.5 V to 1.8 V, making it versatile and ideal for many types of low−power LDO applications.

V_{RO} − Reference Output

When it is configured for DDR termination applications, V_{RO} generates the DDR V_{TT} reference voltage for the memory application. It is capable of supporting both a sourcing and sinking load of 10 mA. V_{RO} becomes active when V_{RI} voltage rises to 435 mV and V_{CC} is above the UVLO threshold. When V_{RO} is less than 360 mV, it is disabled and subsequently discharges to GND through an internal 10 kΩ MOSFET. V_{RO} is independent of the EN pin state.

Soft Start

The soft−start function of the V_{TT} pin is achieved via a current clamp. The current clamp allows the output capacitors to be charged with low and constant current, providing a linear ramp−up of the output voltage. When

V_{TT} is outside of the power good window, the current clamp level is one−half of the full over−current limit (OCL) level. When V_{TT} rises or falls within the P_{GOOD} window, the current clamp level switches to the full OCL level.

The soft−start function is completely symmetrical; it works not only from GND to the V_{RO} voltage but also from PV_{CC} to the V_{RO} voltage.

EN − Enable Control

When EN is driven high, the NCP51400 V_{TT} regulator begins normal operation. When EN is driven low, V_{TT} is discharges to GND through an internal 18 Ω MOSFET. V_{REF} remains on when EN is driven low.

P_{GOOD} − PowerGood

The NCP51400 provides an open−drain P_{GOOD} output that goes high when the V_{TT} output is within ±20% of V_{RO}. P_{GOOD} de−asserts within 10 μs after the output exceeds the limits of the PowerGood window. During initial V_{TT} startup, P_{GOOD} asserts high 2 ms after the V_{TT} enters power good window. Because P_{GOOD} is an open−drain output, a 100 kΩ, pull−up resistor between P_{GOOD} and a stable active supply voltage rail is required.

The LDO has a constant over−current limit (OCL). Note that the OCL level reduces by one−half when the output voltage is not within the power good window. This reduction is non−latch protection. For V_{CC} under−voltage lockout (UVLO) protection, the NCP51400 monitors V_{CC} voltage. When the V_{CC} voltage is lower than the UVLO threshold voltage, both the V_{TT} and V_{RO} regulators are powered off. This shutdown is also non−latch protection.

Thermal Shutdown with Hysteresis

If the NCP51400 is to operate in elevated temperatures for long durations, care should be taken to ensure that the maximum operating junction temperature is not exceeded. To guarantee safe operation, the NCP51400 provides on−chip thermal shutdown protection. When the chip junction temperature exceeds 150°C, the part will shutdown. When the junction temperature falls back to 125°C, the device resumes normal operation. If the junction temperature exceeds the thermal shutdown threshold then the V_{TT} and V_{RO} regulators are both shut off, discharged by the internal discharge MOSFETs. The shutdown is a non−latch protection.

Tracking Startup and Shutdown

The NCP51400 also supports tracking startup and shutdown when EN is tied directly to the system bus and not used to turn on or turn off the device. During tracking startup, V_{TT} follows V_{RO} once V_{RI} voltage is greater than 435 mV. V_{RI} follows the rise of V_{DDQ} memory supply rail via a voltage divider. The typical soft−start time for the V_{DDQ} memory supply rail is approximately 3 ms, however it may vary depending on the system configuration. The SS time of the V_{TT} output no longer depends on the OCL setting, but it is a function of the SS time of the V_{DDQ} memory supply rail. P_{GOOD} is asserted 2 ms after V_{TT} is within ±20% of V_{RO}. During tracking shutdown, V_{TT} falls following V_{RO} until V_{RO} reaches 360 mV. Once V_{RO} falls below 360 mV, the internal discharge MOSFETs are turned on and quickly discharge both V_{RO} and V_{TT} to GND. P_{GOOD} is de−asserted once V_{TT} is beyond the ±20% range of V_{RO}.

VTT Output Capacitor

The NCP51200 requires the output capacitor connected as close as possible to the VTT and PGND pins. The regulator has been designed to remain stable with output capacitor's effective capacitance in range from 20 μF to 1000 μF. The ceramic X7R or X5R type is recommended due to its low capacitance variations over the specified temperature range and low ESR and ESL. When selecting the capacitor value the changes with temperature and DC bias voltage needs to be taken into account. Especially for small package size

Share Feedback
Your Opinion Matters

Downloaded from Arrow.com.

capacitors, the effective capacitance drops rapidly with the applied DC bias voltage (refer the capacitor's datasheet for details). Larger capacitance and lower ESR improves the load transient response and PSRR. In the PCB layout, design the traces short and wide and place the capacitor at the same PCB layer as the device (do not use layers changing for the traces).

PVCC Input Capacitor

Power input capacitor, connected as close as possible to PVCC and PGND pins, is also necessary to ensure device stability and good transient response. The value of the input capacitor should be 10 μF or greater (max. value is not limited). This capacitor provides needed energy during load transients for output capacitor re−charging and from this point of view, the higher value is better. The good starting value is the half of the output capacitor value. The rules mentioned at VTT capacitor paragraph are applicable for PVCC capacitor as well.

VCC Input Capacitor

Add a ceramic capacitor, connected as close as possible to VCC and GND pins. The X7R or X5R capacitor should be used with a value in range from 1 μF to 10 μF is recommended.

Share Feedback
Your Opinion Matters

Downloaded from Arrow.com.

DFN10, 3x3, 0.5P
CASE 506CL
ISSUE O

SCALE 2:1

DATE 02 APR 2013

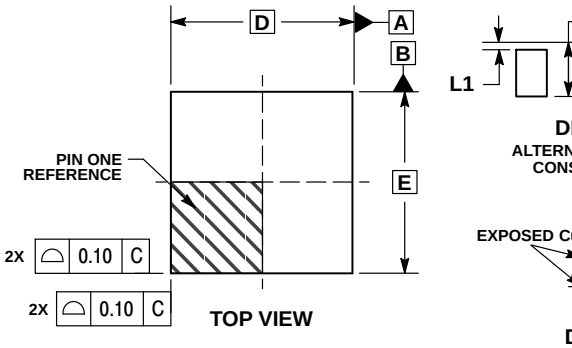

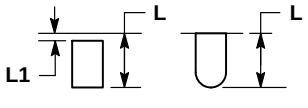

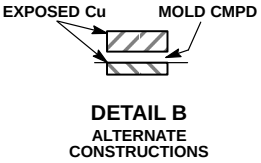

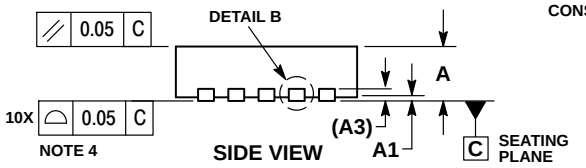

NOTES:
1. DIMENSIONING AND TOLERANCING PER ASME Y14.5M, 1994.
2. CONTROLLING DIMENSION: MILLIMETERS.
3. DIMENSION b APPLIES TO PLATED TERMINAL AND IS MEASURED BETWEEN 0.25 AND 0.30 MM FROM THE TERMINAL TIP.
4. COPLANARITY APPLIES TO THE EXPOSED PAD AS WELL AS THE TERMINALS.
5. TERMINAL b MAY HAVE MOLD COMPOUND MATERIAL ALONG SIDE EDGE. MOLD FLASHING MAY NOT EXCEED 30 MICRONS ONTO BOTTOM SURFACE OF TERMINAL b.
6. FOR DEVICE OPN CONTAINING W OPTION, DETAIL B ALTERNATE CONSTRUCTION IS NOT APPLICABLE.

	MILLIMETERS	
DIM	MIN	MAX
A	0.80	1.00
A1	0.00	0.05
A3	0.20 REF	
b	0.20	0.30
D	3.00 BSC	
D2	2.40	2.60
E	3.00 BSC	
E2	1.40	1.60
e	0.50 BSC	
K	0.25	---
L	0.25	0.45
L1	0.00	0.03

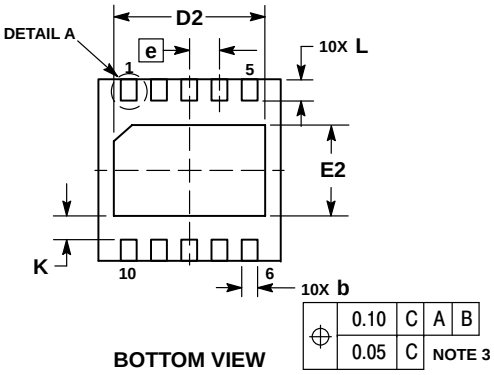

GENERIC MARKING DIAGRAM*



A = Assembly Location
L = Wafer Lot
Y = Year
W = Work Week
▪ = Pb−Free Package
(Note: Microdot may be in either location)

*This information is generic. Please refer to device data sheet for actual part marking. Pb−Free indicator, “G” or microdot “ ▪”, may or may not be present.

RECOMMENDED SOLDERING FOOTPRINT*

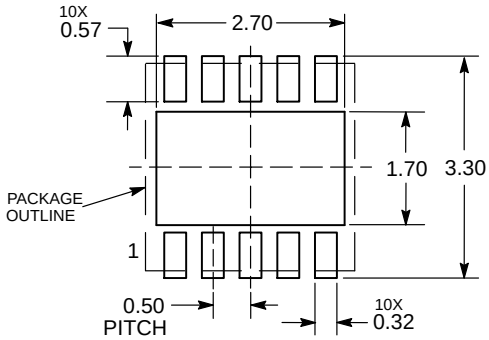

DIMENSIONS: MILLIMETERS

*For additional information on our Pb−Free strategy and soldering details, please download the **onsemi** Soldering and Mounting Techniques Reference Manual, SOLDERRM/D.

DOCUMENT NUMBER:	**98AON88041E**	Electronic versions are uncontrolled except when accessed directly from the Document Repository. Printed versions are uncontrolled except when stamped “CONTROLLED COPY” in red.	
DESCRIPTION:	**DFN10, 3X3, 0.5P**		**PAGE 1 OF 1**

onsemi and onsemi are trademarks of Semiconductor Components Industries, LLC dba **onsemi** or its subsidiaries in the United States and/or other countries. **onsemi** reserves the right to make changes without further notice to any products herein. **onsemi** makes no warranty, representation or guarantee regarding the suitability of its products for any particular purpose, nor does **onsemi** assume any liability arising out of the application or use of any product or circuit, and specifically disclaims any and all liability, including without limitation special, consequential or incidental damages. **onsemi** does not convey any license under its patent rights nor the rights of others.

Downloaded from Arrow.com.

onsemi, ONSEMI , and other names, marks, and brands are registered and/or common law trademarks of Semiconductor Components Industries, LLC dba "**onsemi**" or its affiliates and/or subsidiaries in the United States and/or other countries. **onsemi** owns the rights to a number of patents, trademarks, copyrights, trade secrets, and other intellectual property. A listing of **onsemi**'s product/patent coverage may be accessed at www.onsemi.com/site/pdf/Patent−Marking.pdf. **onsemi** reserves the right to make changes at any time to any products or information herein, without notice. The information herein is provided "as−is" and **onsemi** makes no warranty, representation or guarantee regarding the accuracy of the information, product features, availability, functionality, or suitability of its products for any particular purpose, nor does **onsemi** assume any liability arising out of the application or use of any product or circuit, and specifically disclaims any and all liability, including without limitation special, consequential or incidental damages. Buyer is responsible for its products and applications using **onsemi** products, including compliance with all laws, regulations and safety requirements or standards, regardless of any support or applications information provided by **onsemi**. "Typical" parameters which may be provided in **onsemi** data sheets and/or specifications can and do vary in different applications and actual performance may vary over time. All operating parameters, including "Typicals" must be validated for each customer application by customer's technical experts. **onsemi** does not convey any license under any of its intellectual property rights nor the rights of others. **onsemi** products are not designed, intended, or authorized for use as a critical component in life support systems or any FDA Class 3 medical devices or medical devices with a same or similar classification in a foreign jurisdiction or any devices intended for implantation in the human body. Should Buyer purchase or use **onsemi** products for any such unintended or unauthorized application, Buyer shall indemnify and hold **onsemi** and its officers, employees, subsidiaries, affiliates, and distributors harmless against all claims, costs, damages, and expenses, and reasonable attorney fees arising out of, directly or indirectly, any claim of personal injury or death associated with such unintended or unauthorized use, even if such claim alleges that **onsemi** was negligent regarding the design or manufacture of the part. **onsemi** is an Equal Opportunity/Affirmative Action Employer. This literature is subject to all applicable copyright laws and is not for resale in any manner.

ADDITIONAL INFORMATION

TECHNICAL PUBLICATIONS:
Technical Library: www.onsemi.com/design/resources/technical−documentation
onsemi Website: www.onsemi.com

ONLINE SUPPORT: www.onsemi.com/support
For additional information, please contact your local Sales Representative at www.onsemi.com/support/sales

◊

Downloaded from Arrow.com.