207W223 -3-01-0 Product Details

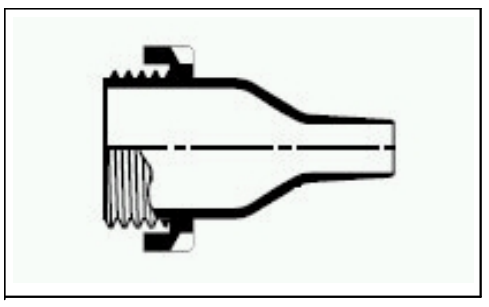

207W223 -3-01-0

Raychem Part Number:
878121-000
Active

Molded Parts

Always EU RoHS/ELV Compliant (Statement of Compliance)

Product Highlights:

- Feed through
- Family Name = 207W2
- General Purpose Application
- 3 Material Code
- Adhesive Code = S1017, S1048

View all Features | Find Similar Products

Quick Links

Check Pricing & Availability
Search for Tooling
Product Feature Selector
Contact Us About This Product

Documentation & Additional Information

Product Drawings:
- Customer Drawing (PDF, English)

Catalog Pages/Data Sheets:
- None Available

Product Specifications:
- None Available

Application Specifications:
- None Available

Instruction Sheets:
- None Available

CAD Files:
- None Available

List all Documents

Additional Information:
- Product Line Information

Related Products:
- Tooling

Product Features (Please use the Product Drawing for all design activity)

Product Type Features:
- Product Type = Feed through
- Mounting Hole Diameter (mm [in]) = 34 [1.34]
- Size = 23
- Material = Semi rigid Modified Polyolefin

Mechanical Attachment:
- Nut Type = B

Electrical Characteristics:
- Expanded ID, Min. (mm [in]) = 18.00 [0.709]
- Recovered ID, Max. (mm [in]) = 7.10 [0.280]

Body Related Features:
- Threaded End Inside Diameter (mm [in]) = 20.1 [0.79]
- Wall Thickness - Full Recovery (Nominal) (mm [in]) = 1.80 [0.071]
- Length (M [ft]) = 0.072 [0.236]
- O-Ring = Without

Contact Related Features:
- Family Name = 207W2

Housing Related Features:
- Adhesive Pre-Coating = Without
- Adhesive Description = Adhesive Purchased Separately.

Configuration Related Features:
- Material Code = 3
- Adhesive Code = S1017, S1048

Industry Standards:
- RoHS/ELV Compliance = RoHS compliant, ELV compliant
- Lead Free Solder Processes = Not relevant for lead free process
- RoHS/ELV Compliance History = Always was RoHS compliant

Operation/Application:
- Application = General Purpose

Other:
- Brand = Raychem

© 2008 Tyco Electronics Corporation All Rights Reserved

Downloaded from Arrow.com.