© 2026TE Connectivity. All Rights Reserved.

REFERENCE MATING INTERFACE PATTERN:
1,27 STAGGERED PITCH x 1,5 ROW-DISTANCE.

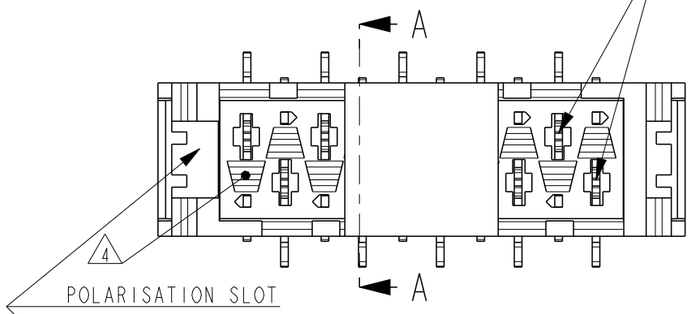

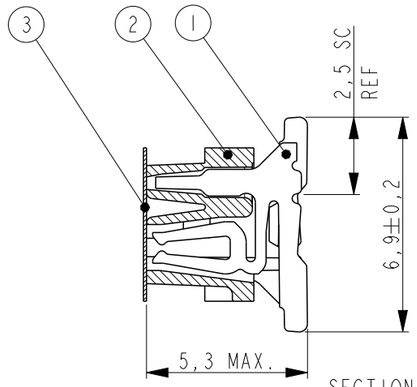

SECTION A-A

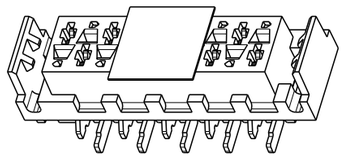

SCALE 3:1

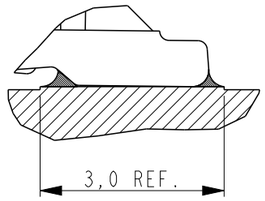

SOLDER DETAIL
SCALE 10:1

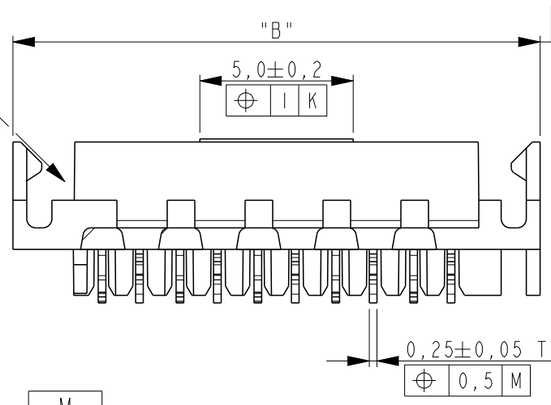

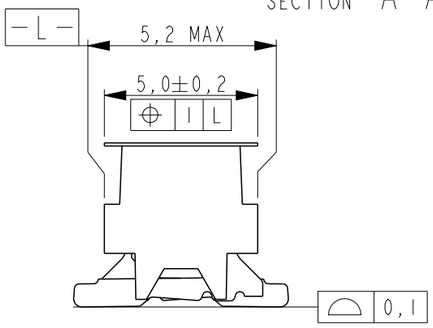

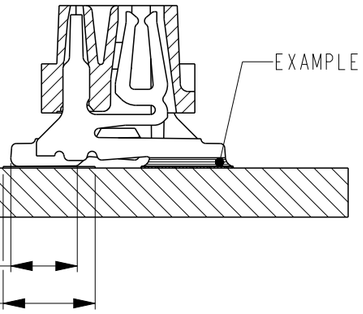

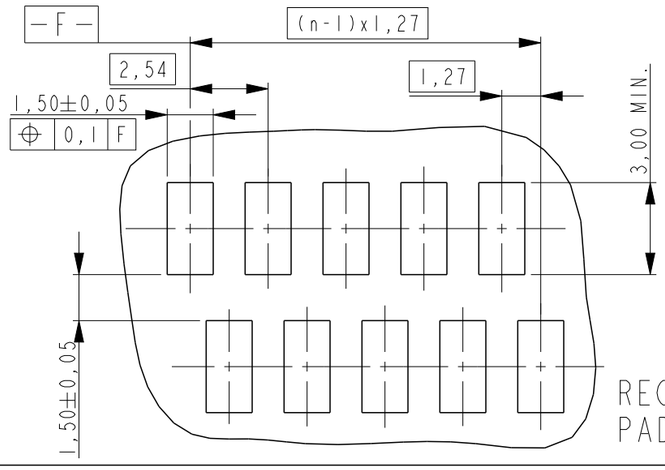

RECOMMENDED PC-BOARD
PAD-LAYOUT TOP VIEW

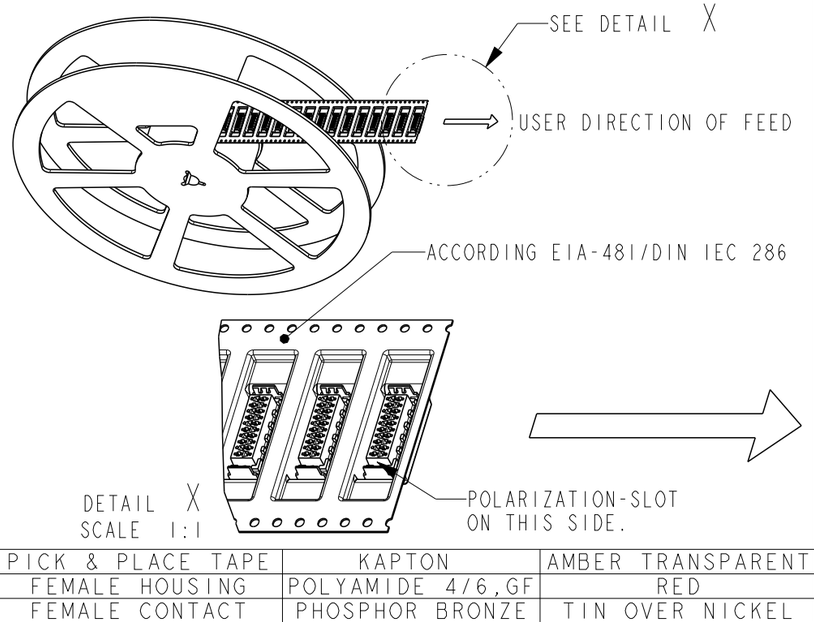

DETAIL X
SCALE 1:1

NOTES:

1. TAPE FOR VACUUM P&P, ONLY FOR DASH NUMBERS 7- /8- /9-
2. FOR PACKAGING, SEE SHEET 2 AND 3
3. WITHOUT VACUUM TAPE.
4. CORING-OUTS FOR MANUFACTURING PURPOSE ONLY.
   SHAPE MAY VARY, BUT IS NOT FUNCTIONAL FOR THE APPLICATION.
5. SHOWN IS A 10 POSITION CONNECTOR
6. DRY PACKAGING AS PER JEDEC, J-STD-020
7. PART RELEASED FOR PRODUCTION.
8. OBSOLETED

REVISIONS

P	LTR	DESCRIPTION	DATE	DWN	APVD
	B2	PART STATUS CHANGE TO DISCONTINUANCE	01JUN2026	NS	PS

	1 PART NUMBER (WITH VACUUM TAPE)	3 PART NUMBER	NO.OF POS."n"	"A"	"B" MAX.
OBSOLETE	7-2823980-4	0-2823980-4	4	3.81	9.7
OBSOLETE	7-2823980-6	0-2823980-6	6	6.35	12.2
OBSOLETE	7-2823980-8	0-2823980-8	8	8.89	14.7
OBSOLETE	8-2823980-0	1-2823980-0	10	11.43	17.3
OBSOLETE	8-2823980-2	1-2823980-2	12	13.97	19.8
OBSOLETE	8-2823980-4	1-2823980-4	14	16.51	22.4
OBSOLETE	8-2823980-6	1-2823980-6	16	19.05	24.9
OBSOLETE	8-2823980-8	1-2823980-8	18	21.59	27.4
OBSOLETE	9-2823980-0	2-2823980-0	20	24.13	30.0
OBSOLETE	9-2823980-2	2-2823980-2	22	25.67	32.41
	7 9-2823980-4	8 2-2823980-4	24	29.21	35.0
OBSOLETE	9-2823980-6	2-2823980-6	26	31.75	37.49

Item no.	Description	Material	Finish
3	PICK & PLACE TAPE	KAPTON	AMBER TRANSPARENT
2	FEMALE HOUSING	POLYAMIDE 4/6,GF	RED
1	FEMALE CONTACT	PHOSPHOR BRONZE	TIN OVER NICKEL

THIS DRAWING IS A CONTROLLED DOCUMENT.

DIMENSIONS: mm

TOLERANCES UNLESS OTHERWISE SPECIFIED:
0 PLC ±-
1 PLC ±0.2
2 PLC ±0.1
3 PLC ±-
4 PLC ±-
ANGLES ±1°

MATERIAL SEE TABLE

FINISH SEE TABLE

DWN SHARATH S 09AUG2016
CHK KARTHIK J K 09AUG2016
APVD PRASHANTH S 09AUG2016
PRODUCT SPEC 108-19052
APPLICATION SPEC 114-13318
WEIGHT -

TE Connectivity

NAME Micro-MaTch FEMALE-ON-BOARD TOP-ENTRY, SMD CONNECTOR WITH LATCHES, DRY PKG.

SIZE	CAGE CODE	DRAWING NO	RESTRICTED TO
A3	00779	C-2823980	-

CUSTOMER DRAWING | SCALE 5:1 | SHEET 1 OF 3 | REV B2

1470-19 (3/13)

Downloaded from Arrow.com.

© 2026 TE Connectivity. All Rights Reserved.

REVISIONS					
P	LTR	DESCRIPTION	DATE	DWN	APVD
	-	SEE SHEET 1	-	-	-

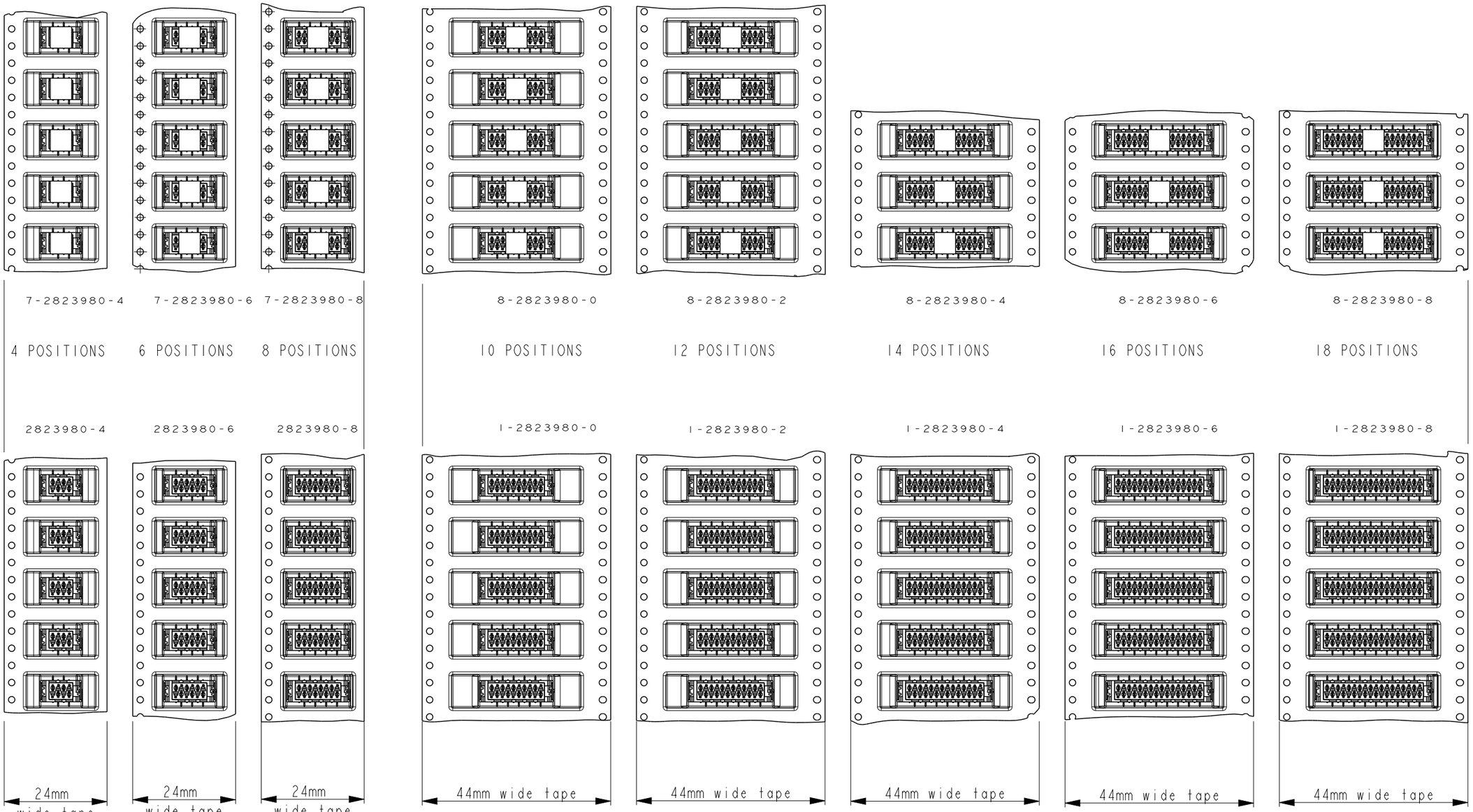

THIS DRAWING IS A CONTROLLED DOCUMENT.		DWN SHARATH S 09AUG2016	TE Connectivity
DIMENSIONS: mm	TOLERANCES UNLESS OTHERWISE SPECIFIED: 0 PLC ±- ; 1 PLC ±0.2 ; 2 PLC ±0.1 ; 3 PLC ±- ; 4 PLC ±- ; ANGLES ±1°	CHK KARTHIK J K 09AUG2016	NAME Micro-MaTch FEMALE-ON-BOARD TOP-ENTRY, SMD CONNECTOR WITH LATCHES, DRY PKG.
		APVD PRASHANTH S 09AUG2016	
		PRODUCT SPEC 108-19052	
		APPLICATION SPEC 114-13318	SIZE A3 · CAGE CODE 00779 · DRAWING NO C-2823980 · RESTRICTED TO -
MATERIAL SEE TABLE .	FINISH SEE TABLE .	WEIGHT -	
CUSTOMER DRAWING		SCALE 4:1	SHEET 2 OF 3 · REV B2

Downloaded from Arrow.com.

© 2026 TE Connectivity. All Rights Reserved.

REVISIONS					
P	LTR	DESCRIPTION	DATE	DWN	APVD
	-	SEE SHEET 1	-	-	-

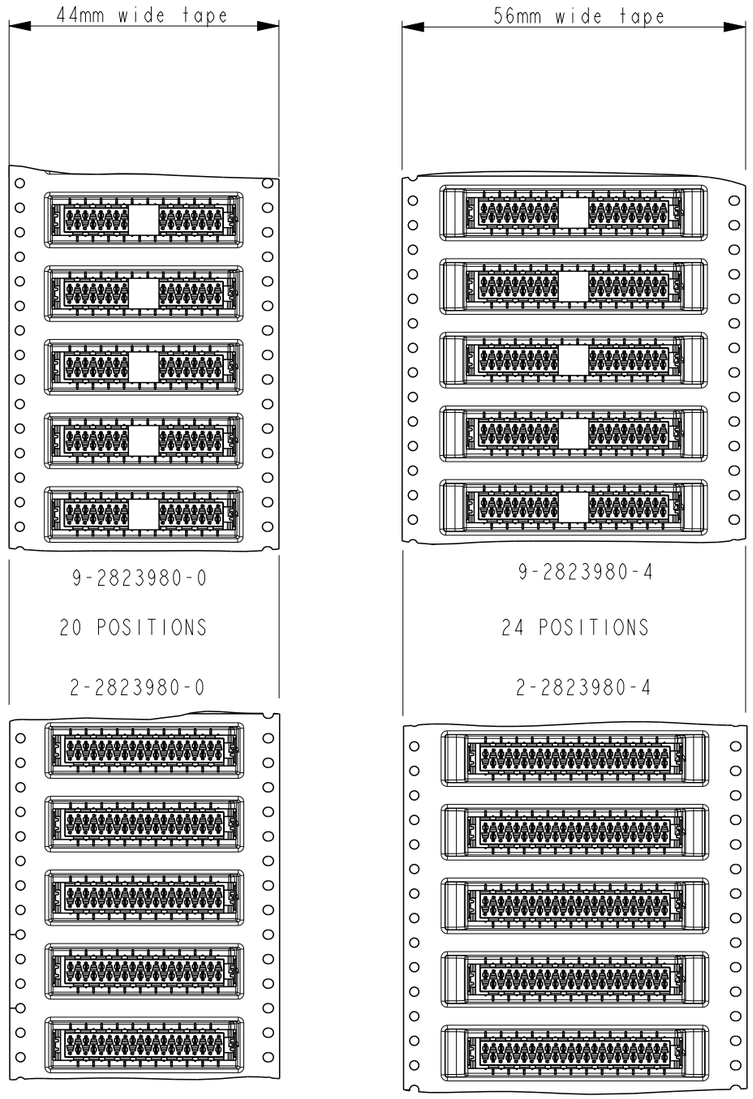

THIS DRAWING IS A CONTROLLED DOCUMENT.

DIMENSIONS: mm	TOLERANCES UNLESS OTHERWISE SPECIFIED: 0 PLC ±- ; 1 PLC ±0.2 ; 2 PLC ±0.1 ; 3 PLC ±- ; 4 PLC ±- ; ANGLES ±1°
MATERIAL: SEE TABLE	FINISH: SEE TABLE

DWN	SHARATH S 09AUG2016
CHK	KARTHIK J K 09AUG2016
APVD	PRASHANTH S 09AUG2016
PRODUCT SPEC	108-19052
APPLICATION SPEC	114-13318
WEIGHT	-

TE Connectivity

NAME: Micro-MaTch FEMALE-ON-BOARD TOP-ENTRY, SMD CONNECTOR WITH LATCHES, DRY PKG.

SIZE	CAGE CODE	DRAWING NO	RESTRICTED TO
A3	00779	C-2823980	-

CUSTOMER DRAWING | SCALE 4:1 | SHEET 3 OF 3 | REV B2

Downloaded from Arrow.com.