Magnetic Proportion System

L34S D15 SERIES

SPECIFICATIONS

Ta=25℃, RL=10kΩ, Vcc=±15V

Spec \ Types	Symbol	L34S200D15	L34S300D15	L34S400D15	L34S500D15	L34S600D15	L34S800D15	L34S1T0D15	L34S1T2D15	L34S1T5D15
Primary norminal current	If	200A	300A	400A	500A	600A	800A	1000A	1200A	1500A
Saturation current *1	If max	±600A	±900A	±1200A	±1500A	±1800A	±2400A	±2500A	±2500A	±2500A
Rated Output Voltage	Vo	4V±0.040V (at If)								
Offset voltage	Vof	≦±0.020V (at If = 0A) *2								
Output linearity (without offset)	ε_L	≦±0.5% (at 0A, 1/2If, If)								
Power supply voltage	Vcc	±12V (±5%) ~ ±15V (±5%)								
Consumption current	Icc	16mA (TYP) ≦ 25mA								
di/dt (@90% of If) Response time	tr	≦ 5μs (di/dt = 100A /μs) *3								
Thermal drift of gain	T_CVO	≦ ±0.05%/℃ (Without TcVof)								
Thermal drift of offset	T_CVof	≦ ±1.0mV/℃ (at If=0A)								
Hysteresis error	V_{OH}	≦ ±10mV (at 0A → If → 0A)								
Insulation voltage	Vd	AC3000V, for 1minute (Sensing current 0.5mA), inside of through hole ⇔ terminal								
Insulation resistance	R_{IS}	≧ 500MΩ (at DC500V) inside of through hole ⇔ terminal								
Ambient Operating temperature	T_A	−30℃~+80℃								
Ambient storage temperature	T_S	−40℃~+85℃								

*1 If the product of 800A or less operate at Vcc = ±12V power supples, measuring range reduced to 2.5 x If. *2 Offset voltage value is after removal of core hysteresis. *3 Measurement condition : Primary conductor cross sectional area is as same as through hole, and penetration with 1turn in through hole. *Please refer to the another sheet about conditions of UL Recognition.

DIMENSIONS (mm)

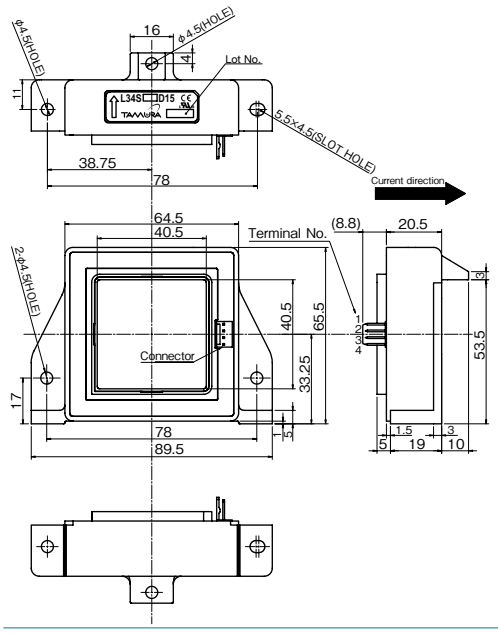

Types		Connector			
		Manufacturer	Part Number	Old Part Number	Plating of terminal
L34SxxxD15	Standard	Molex	22-04-1041	5045-04A	Sn
L34SxxxD15-A	Build to Order		22-11-1041	5045-04AG	Gold

As for the product of a gold-plated connector, '-A' attaches to the end of the product name.

Terminal number
1 +Vcc (+15V)
2 −Vcc (−15V)
3 Vout
4 GND

Weight
165g

Note
1. Unless otherwise specified, tolerances shall be ±0.5mm

Downloaded from Arrow.com.

Important Notice

1. The content of this information is subject to change without prior notice for the purpose of improvements, etc. Ensure that you are in possession of the most up-to-date information when using this product.

2. This product is intended to be used in general electronics applications (electric home appliances, business equipment, information equipment, communication terminal equipment, measuring devices, industrial equipment, and so on). This product is neither intended nor warranted for use in following equipment or devices:

   Special application (such as for medical devices, transportation equipment, traffic signal control equipment, fire and crime prevention equipment, aeronautics and space devices, nuclear power control, fuel control, in-vehicle equipment, safety devices, and so on) in which extremely high quality and high reliability is required, or if the malfunction or failures of product could be cause loss of human life, bodily injury.

   Tamura Corporation shall not be held responsible for any damage incurred by customers or any third party when products are used in special application, unless specifically permitted in this document.

3. Tamura Corporation constantly strives to improve quality and reliability, but malfunction or failures are bound to occur with some probability in current sensor. To ensure that failures do not cause accidents resulting in injury or death, fire accidents, social damage, and so on, users are to thoroughly verify the safety of their designs in devices and/or systems.

4. The operation examples and circuit examples shown in this information are for reference purposes only, and Tamura Corporation disclaims all responsibility for any violations of industrial property rights, intellectual property rights and any other rights owned by Tamura Corporation or third parties that these may entail.

5. The circuit examples and part constants listed in these specifications are provided as reference for the verification of characteristics. The user is to perform design, verification, and judgment under his or her own responsibility, taking into account the various conditions.

6. The products are designed for use in environments where consumer electronics are commonly used. It is not designed for use in special environments such as listed below, and if such use is considered, the user is to perform thorough safety and reliability checks under his/her responsibility.

7. This product is not designed to resist radiation.
   - *Use in liquids such as water, oil, chemical solutions, or organic solvents, and use in locations where the product will be exposed to such liquids.*
   - *Use that involves exposure to direct sunlight, outdoor exposure, or dusty conditions.*
   - *Use in locations where corrosive gases such as sea winds, Cl2, H2S, NH3, SO2, or NO2, are present. (Some product improves durability)*
   - *Use in environments with strong static electricity or electromagnetic radiation.*
   - *Use that involves placing inflammable material next to the product.*
   - *Use of this product either sealed with a resin filling or coated with resin.*
   - *Use of water or a water soluble detergent for flux cleaning.*
   - *Use in locations where condensation is liable to occur.*

8. Do not use or otherwise make available the TAMUTA products or the technology described in this document for any military purposes, including without limitation, for the design, development, use, stockpiling or manufacturing of mass destruction weapons (e.g. nuclear, chemical, or biological weapons or missile technology products). When exporting and re-exporting the products or technology described in this document, you should comply with the applicable export control laws and regulations and follow the procedures required by such laws and regulations including, without limitation, Japan -Foreign Exchange and Foreign Trade Control Law and U.S.-Export Administration Regulations. The TAMURA products and related technology should not be used for or incorporated into any products or systems whose manufacture, use, or sale is prohibited under any applicable domestic or foreign laws or regulations.

9. Please contact your TAMURA sales office for details as to environmental matters such as the RoHS compatibility of Product. Please use TAMURA products in compliance with all applicable laws and regulations that regulate the inclusion or use of controlled substances, including without limitation, the EU RoHS Directive. TAMURA assumes no liability for damages or losses occurring as a result of your noncompliance with applicable laws and regulations.

10. TAMURA assumes no liability for damages or losses incurred by you or third parties as a result of unauthorized use of TAMURA products.

11. This document and any information herein may not be reproduced in whole or in part without prior written permission from TAMURA.

Downloaded from Arrow.com.

Application notes

<General Considerations>

1. The sensor uses polar electronic components. When the polarity of the power supply is mistaken, the sensor is damaged.
2. Static electricity or excessive voltage can increase an offset voltage in the Hall element, and cause offset voltage to change. Please exercise care in handling and application.
3. In order to prevent the influence of noise, the use of twisted cable or shielded cable for the output line is recommended
4. If using this device within a magnetic field generated by other devices, the specified accuracy may not be obtainable.
5. Our products (several models are excluded) are adjusted with the trimming method by the measurement condition (Load resistance, Power supply voltage) of specification sheets. Therefore, characteristics (Offset, Output, etc.) and its deviation may be changed in different circuit conditions from the measurement condition. All change characteristic items are not indicated on specification sheets.
6. The performance of current sensors with through-hole (aperture) is dependent on the position of the primary conductor. Tamura specifications are based on a primary conductor completely filling the through-hole (aperture) area.
7. The current sensor rated current in DC Amps.
8. Please use mating connector with equivalent terminal plating material to insure proper operation and avoid possibility of 'galvanic corrosion' .
9. Please do not store in high-temperature and high-humidity storage environment. Please use it after confirming soldering when it is kept for six months or more. (product soldered with substrate)
10. We recommend performing a zero offset adjustment by measuring the offset voltage at startup. In continuously operation for a few months, or at change of ambient temperature or humidity is large, we recommend regularly performing a zero offset adjustment at being idling (it is clear that the current is not apply) .
11. The current sensor doesn't have built-in protection circuit (devices and fuses, etc.). As a failure mode of the sensor, there is a short circuit and open state. In the case of a short-circuit state, the abnor-mal temperature rise of the internal parts is assumed, and there is a possibility to smoke and to ignite. If it is used in safety critical circuit blocks, please take appropriate measures by protection devices, protection circuits, etc. For closed loop –type sensors and flux gate (closed loop type) sensors, the consumption current of the secondary power supply varies in proportion to the measurement current.

<Open loop>

1. High frequency primary current may result in excessive heating in iron magnetic core and cause damage to internal circuitry; for high frequency applications select current sensor with ferrite core material.
2. If the measured current exceeds the rated current, magnetic core saturation will occur and the output voltage signal will not be linearly proportional to the measured current.

<Closed Loop>

1. For closed loop current sensors please insure the power supply voltage is balanced, symmetrical, and, applied simultaneously to avoid potential increase in DC offset error.
2. Maximum rated current measurement duration is timedependent. Maximum rated current applied in excess of the time limit can result in damage to internal electronic circuitry; please consult Tamura for assistance.
3. When using a measurement resistor to convert current output to voltage output select a resistor with stable temperature characteristic to insure accuracy of the output voltage.
4. Compensation current supplied to the secondary winding varies in proportion to the measured current based on the conversion ratio. (If/KN; KN = secondary turns) Please insure the PSU has required current capacity to supply compensation current to the secondary winding.

<Flux-Gate>

1. Compensation current supplied to the secondary winding varies in proportion to the measured current. Please insure the PSU has required current capacity to supply compensation current to the secondary winding.
2. There is 450kHz ripple voltage present on the output and reference output voltage signals . An external capacitor maybe added if necessary.

Downloaded from Arrow.com.