180W Single Output with Battery Charger(UPS Function) DRC-180 series

User's Manual
Click Me

UL62368-1 BS EN/EN62368-1 TPTC004 AS/NZS 62368.1 IEC62368-1

Features

- Universal AC input / Full range
- Built-in active PFC function
- Alarm signal for AC OK and Battery Low(Via Relay)
- Protections: Short circuit / Overload / Over voltage / Over temperature
- Battery low protection / Battery reverse polarity protection by fuse
- Cooling by free air convection
- -20 ~ +70℃ wide operating temperature
- Can be installed on DIN rail TS-35/7.5 or 15
- DC output voltage adjustable (+20%)
- LED indication for Power on
- Operating altitude up to 5000 meters (Note.6)
- 3 years warranty

Applications

- Security system
- Emergency lighting system
- Alarm system
- UPS system
- Central monitoring system
- Access systems

GTIN CODE

MW Search: https://www.meanwell.com/serviceGTIN.aspx

Description

DRC-180 is a 180W AC/DC DIN rail type security power supply series. In addition to the primary output, there is a charger output with a smaller rated current, enabling the backup power supply application the security access systems require. DRC-180 accepts the universal input between 90VAC and 264VAC, and supplies 13.8VDC and 27.6VDC at output, respectively. With the efficiency up to 90%, it can operate with air convection cooling under -20℃ through 70℃. In addition to the key protection features such as overload protection,over voltage protection, battery low cut off, and battery reverse polarity protection (by fuse), the alarm signal for AC OK and battery low signaling is provided, via relay contact output, to facilitate the system design.

Model Encoding

DRC - 180 A

- A — Output voltage(A: 13.8V , B: 27.6V)
- 180 — Rated wattage
- DRC — Series name

Downloaded from Arrow.com.

180W Single Output with Battery Charger(UPS Function) DRC-180 series

SPECIFICATION

MODEL		DRC-180A		DRC-180B	
OUTPUT	OUTPUT NUMBER	CH1	CH2	CH1	CH2
	DC VOLTAGE	13.8V	13.8V	27.6V	27.6V
	RATED CURRENT	9A	4A (Battery charger)	4.5A	2A (Battery charger)
	CURRENT RANGE	0 ~ 13A	--------	0 ~ 6.5A	--------
	RATED POWER	179.4W		179.4W	
	RIPPLE & NOISE (max.) Note.2	150mVp-p	--------	240mVp-p	--------
	VOLTAGE ADJ. RANGE	CH1: 12 ~ 15V		CH1: 24 ~ 29V	
	VOLTAGE TOLERANCE Note.3	±1.0%	--------	±1.0%	--------
	LINE REGULATION	±0.5%	--------	±0.5%	--------
	LOAD REGULATION	±0.5%	--------	±0.5%	--------
	SETUP, RISE TIME Note.4	2000ms, 30ms/230VAC 2000ms, 30ms/115VAC at full load			
	HOLD UP TIME (Typ.)	20ms/230VAC 20ms/115VAC at full load			
INPUT	VOLTAGE RANGE	90 ~ 264VAC 127 ~ 370VDC			
	FREQUENCY RANGE	47 ~ 63Hz			
	POWER FACTOR (Typ.)	PF≧0.95/230VAC PF≧0.98/115VAC at full load			
	EFFICIENCY (Typ.)	88%		90%	
	AC CURRENT (Typ.)	2.5A/115VAC 1.5A/230VAC			
	INRUSH CURRENT (Typ.)	COLD START 35A/115VAC 70A/230VAC			
	LEAKAGE CURRENT	<2mA / 240VAC			
PROTECTION	OVERLOAD	105 ~ 150% rated output power			
		Protection type : Hiccup mode, recovers automatically after fault condition is removed			
	OVER VOLTAGE	CH1:15.8 ~ 19.5V		CH1:30.5 ~ 37.7V	
		Protection type : Shut down o/p voltage, re-power on to recover			
	OVER TEMPERATURE	Shut down o/p voltage, re-power on to recover			
	BATTERY CUT OFF	10±0.5V		20±1V	
ALARM FUNCTION	AC OK Note.5	Relay contact output, Closed : AC OK ; Open : AC Fail ; Max. rating : 30V / 1A			
	BATTERY LOW	Relay contact output, Open : Battery OK ; Closed : Battery Low ; Max. rating : 30V / 1A			
		Battery low voltage : < 11V		Battery low voltage : < 22V	
ENVIRONMENT	WORKING TEMP.	-20 ~ +70℃ (Refer to "Derating Curve")			
	WORKING HUMIDITY	20 ~ 90% RH non-condensing			
	STORAGE TEMP., HUMIDITY	-20 ~ +85℃, 10 ~ 95% RH non-condensing			
	TEMP. COEFFICIENT	±0.03%/℃ (0~40℃) on CH1 output			
	VIBRATION	10 ~ 500Hz, 2G 10min./1cycle, 60min. each along X, Y, Z axes			
	OPERATING ALTITUDE Note.6	5000 meters / OVC Ⅱ			
	OVER VOLTAGE CATEGORY	Ⅱ; According to Dekra BS EN/EN62368-1; altitude up to 5000 meters			
SAFETY & EMC (Note 7)	SAFETY STANDARDS	UL62368-1, Dekra BS EN/EN62368-1, EAC TP TC 004, AS/NZS 62368.1 approved			
	WITHSTAND VOLTAGE	I/P-O/P:3KVAC I/P-FG:2.0KVAC O/P-FG:0.5KVAC			
	ISOLATION RESISTANCE	I/P-O/P, I/P-FG, O/P-FG:100M Ohms / 500VDC / 25℃/ 70% RH			
	EMC EMISSION	**Parameter**	**Standard**	**Test Level / Note**	
		Radiated	BS EN/EN55032(CISPR32)	Class B	
		Conducted	BS EN/EN55032(CISPR32)	Class B	
	EMC IMMUNITY	BS EN/EN55024			
		Parameter	**Standard**	**Test Level / Note**	
		ESD	BS EN/EN61000-4-2	Level 3, 8KV air ; Level 2, 4KV contact ; criteria A	
		Radiated	BS EN/EN61000-4-3	Level 2, 3V/m ; criteria A	
		EFT / Burst	BS EN/EN61000-4-4	Level 2, 1KV ; criteria A	
		Surge	BS EN/EN61000-4-5	Level 3, 1KV/Line-Line 2KV/Line-Earth ; criteria A	
		Conducted	BS EN/EN61000-4-6	Level 2, 3V ; criteria A	
		Magnetic Field	BS EN/EN61000-4-8	Level 1, 1A/m ; criteria A	
		Voltage Dips and Interruptions	BS EN/EN61000-4-11	>95% dip 0.5 periods, 30% dip 25 periods, >95% interruptions 250 periods	
OTHERS	MTBF	1536.3K hrs min. Telcordia SR-332 (Bellcore); 245.6K hrs min. MIL-HDBK-217F (25℃)			
	DIMENSION	63*125.2*115mm (W*H*D)			
	PACKING	0.71Kg; 12pcs/10.5Kg/1.02CUFT			

NOTE

1. All parameters NOT specially mentioned are measured at 230VAC input, rated load and 25℃ of ambient temperature.
2. Ripple & noise are measured at 20MHz of bandwidth by using a 12" twisted pair-wire terminated with a 0.1 μF & 47 μF parallel capacitor.
3. Tolerance : includes set up tolerance, line regulation and load regulation.
4. Length of set up time is measured at first cold start. Turning ON/OFF the power supply may lead to increase of the set up time.
5. Please refer to suggested Application 2.(2)、(3) in page 4.
6. The ambient temperature derating of 3.5℃/1000m with fanless models and of 5℃/1000m with fan models for operating altitude higher than 2000m(6500ft).
7. The power supply is considered a component which will be installed into a final equipment. The final equipment must be re-confirmed that it still meets EMC directives. For guidance on how to perform these EMC tests, please refer to "EMI testing of component power supplies." (as available on https://www.meanwell.com//Upload/PDF/EMI_statement_en.pdf)
8. The battery voltage is lower than the CUTOFF voltage and cannot perform AC reset charging.

※ Product Liability Disclaimer : For detailed information, please refer to https://www.meanwell.com/serviceDisclaimer.aspx

Downloaded from Arrow.com.

■ Block Diagram

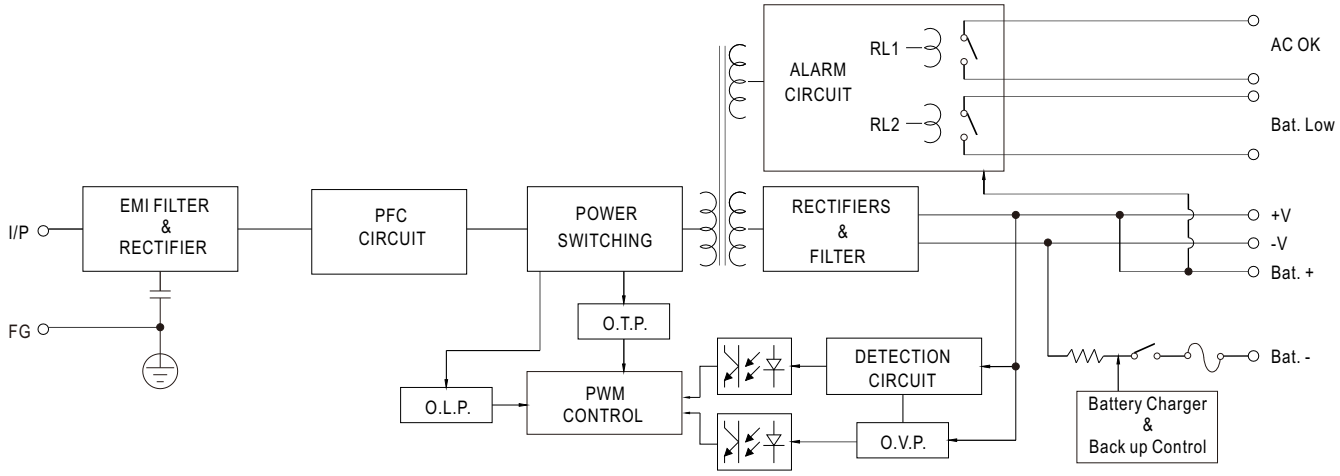

■ Output Derating

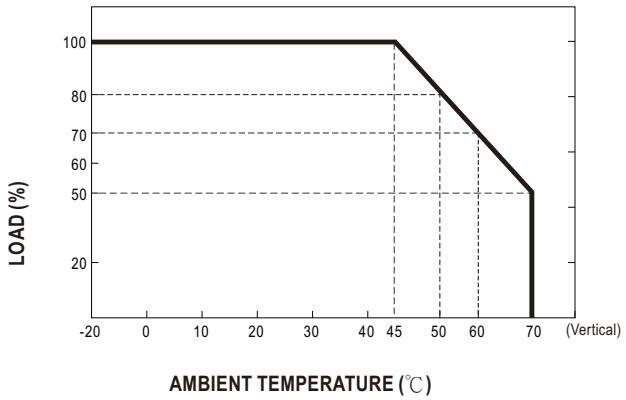

■ Output Derating VS Input Voltage

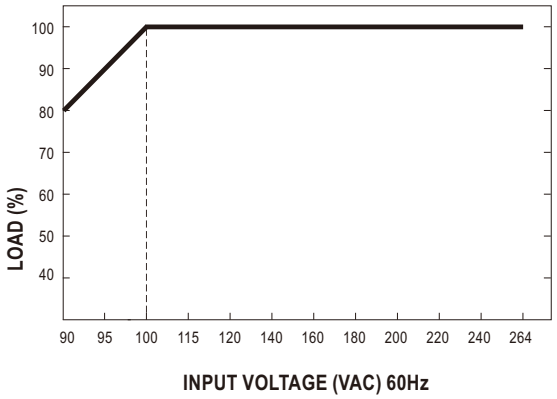

Downloaded from Arrow.com.

■ Suggested Application

1.Backup connection for AC interruption

(1) Please refer to the Fig1.1 for suggested connection.
The power supply charges the battery and provides energy to the load at the same time when the AC main is OK.
The battery starts to supply power to the load when the AC mains fails.

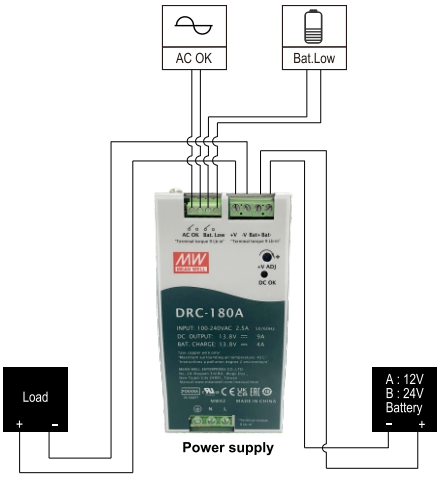

Fig 1.1 Suggested system connection

2.Alarm signal for AC OK and Battery Low

(1) Alarm signal is sent out through " AC OK " & " Battery Low " pins.(relay contact type)
(2) An external voltage source is required for this function. The maximum applied voltage is 30V and the maximum sink current is 1A.
(3) Table2.1 explains the alarm function built in the power supply

Function	Description	Output of Alarm
AC OK	when the power supply turns ON	Closed
	when the power supply turns OFF	Open
Battery Low	when the voltage of battery is under A:11V, B:22V	Closed
	when the voltage of battery is above A:11V, B:22V	Open

Table 2.1 Explanation of Alarm Signal

AC OK (Battery Low)
TB3 Pin1(Pin3)

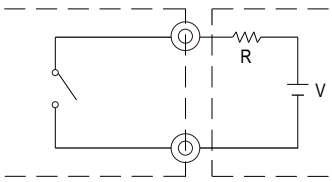

TB3 Pin2(Pin4)

External voltage source (V)
and resistor (R)
(The max. Sink is 1A and 30V)

Fig 2.2 Internal circuit of AC OK (Battery Low)

(4) RL1 (AC OK)signal will go into hiccup mode when the overload protection is activating.

Downloaded from Arrow.com.

■ Mechanical Specification

(Unit: mm , tolerance ± 1mm)

Case No. 979G

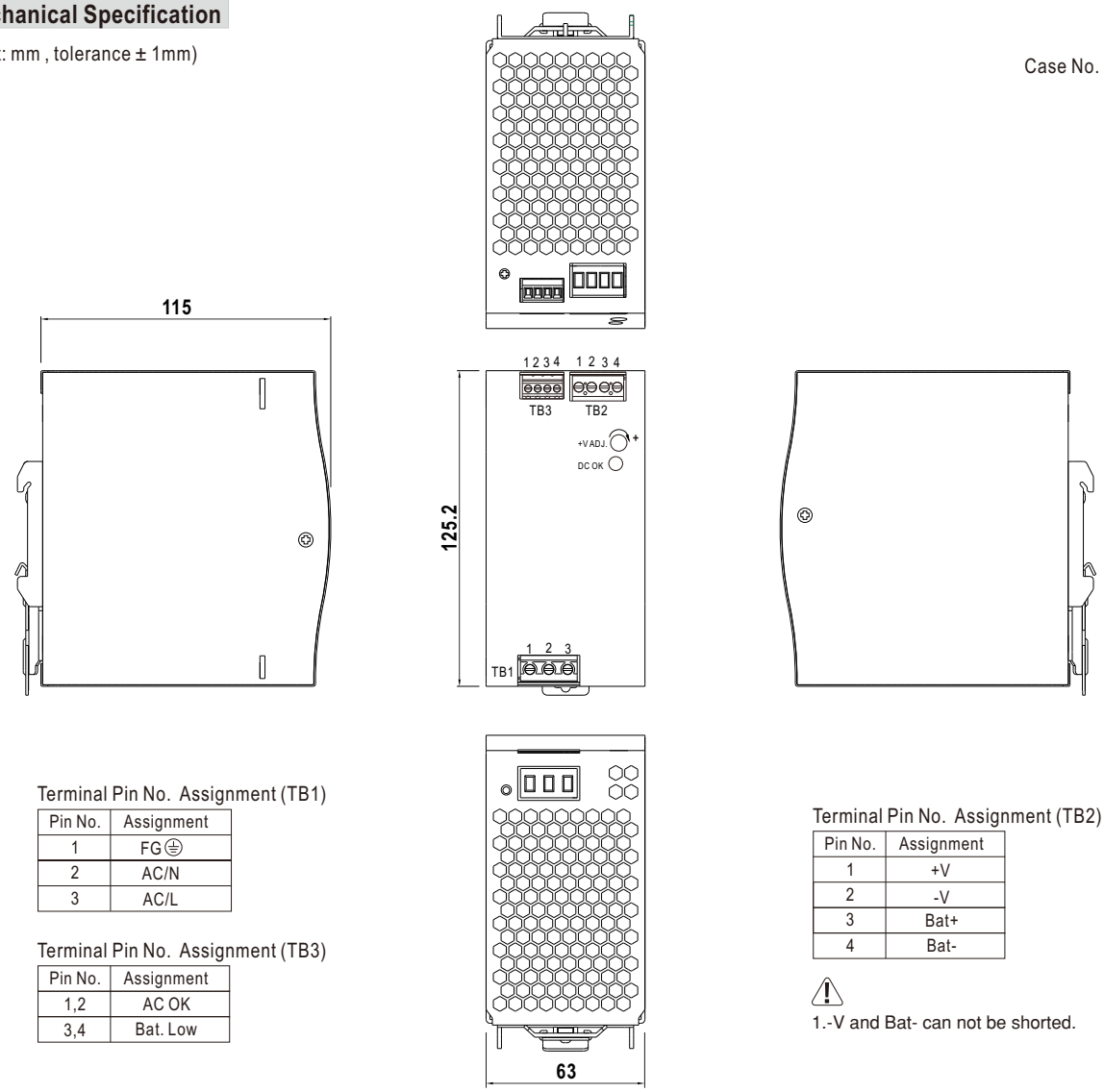

Terminal Pin No. Assignment (TB1)

Pin No.	Assignment
1	FG ⏚
2	AC/N
3	AC/L

Terminal Pin No. Assignment (TB3)

Pin No.	Assignment
1,2	AC OK
3,4	Bat. Low

Terminal Pin No. Assignment (TB2)

Pin No.	Assignment
1	+V
2	-V
3	Bat+
4	Bat-

⚠ 1.-V and Bat- can not be shorted.

■ Installation Instruction

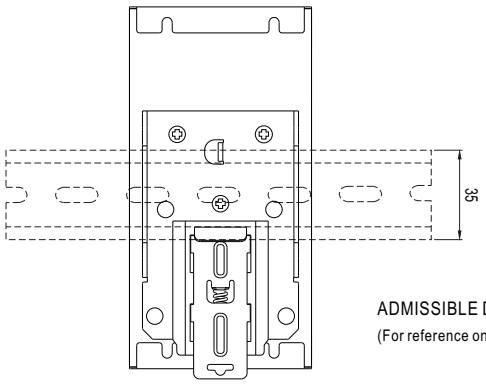

This series fits DIN rail TS35/7.5 or TS35/15.
For installation details, please refer to the Instruction manual.

ADMISSIBLE DIN-RAIL:TS35/7.5 OR TS35/15
(For reference only. Not included with unit.)

■ Installation Manual

Please refer to : http://www.meanwell.com/manual.html

Downloaded from Arrow.com.