W Series

125, 250 Watt AC-DC and DC-DC DIN-Rail Converters
Convert Select

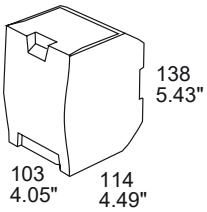

Features

- RoHS lead-free-solder and lead-solder-exempted products are available
- Rugged 35 mm DIN-rail snap-fit design
- Class I equipment
- Universal AC-input or DC-input (66 – 150 or 90 – 350 VDC) with single stage conversion
- Power factor correction, harmonics IEC/EN 61000-3-2
- Virtually no inrush current
- Compliant with EMC standards EN IEC 61204-3, EN 50121-3-2
- Emissions according to EN 55011 / 55032
- Very high efficiency; up to 89%
- Short-term output peak power capability, rectangular current limiting characteristic
- Single or two independently regulated outputs with 12, 24, 36, or 48 V
- Outputs no-load, overload, and short-circuit proof
- PCBs coated by protective lacquer
- Very high reliability
- Product version V107
- Safety-approved to IEC/EN 62368-1 3rd edition and UL/CSA 60950-1 2nd edition, UL 508 listed components

[1] not EW

Table of Contents

Description....2
Model Selection....2
Functional Description....4
Electrical Input Data....6
Electrical Output Data....9
Electromagnetic Compatibility (EMC)....14
Immunity to Environmental Conditions....17
Mechanical Data....19
Safety and Installation Instructions....20
Description of Options....23
Accessories....28
Battery Charging /Temperature Sensor....29

POWER | PROTECT | CONNECT

belfuse.com

Please read our datasheet & drawing disclaimer here.

Downloaded from Arrow.com.

W Series

125, 250 Watt AC-DC & DC-DC DIN-Rail Converters

MELCHER

Description

The MELCHER Convert Select series represents a family of DIN-rail mountable DC-DC and AC-DC converters with power factor correction. The converters have been designed according to the latest industry requirements and standards.

The converters are ideal for use in outdoor and other demanding applications to power building control systems, factory automation, industrial controls, instrumentation, electromagnetic drives, fans, and other DC loads.

Different models are available with a single output or two independently regulated, electrically isolated outputs with 12, 24, 36, or 48 V. Special models for battery charging are available. The EW models are particularly suitable for 110 V railway applications; they have been designed in accordance with the railway standards EN 50155 and EN 50121.

Key features of the Convert Select line include power factor correction with low harmonic distortion, negligibly low inrush current, high immunity to transients and surges, and low electromagnetic emissions. Internal protection circuits such as input over- and undervoltage lockout, thermal protection, as well as output overvoltage protection by a second control loop ensure safe operation of the final system.

The outputs deliver an electrically-isolated Safety Extra Low Voltage (ES1) and low output noise. They are no-load, overload, and short-circuit proof. The electronically controlled short-term peak power capability of up to 150% of the rated output power enables the front end converters to deliver additional power to start-up motors or to safely operate subsequent circuit breakers. Built-in large sized output capacitors absorb possible reverse energy, which may be caused by quick deceleration of electromagnetic drives connected directly to the output. A green LED at the front cover displays the status of the output(s).

The Convert Select Series was designed according to all relevant international safety standards. The converters are approved by Nemko and CSA and are UL 508 listed. Adequate clearances and creepage distances allow operation in pollution degree 3 environment (with AC input). All board assemblies are coated with a protective lacquer.

The thermal concept allows operation at full load up to an ambient temperature of 60 °C (LW models) or 70 °C (EW models) in free air without forced cooling. A rugged DIN snap-fit device allows easy and reliable fixing onto the various 35 mm DIN rail models. The converters are fitted with cage clamp terminals which are easily accessible from the front. System connectors with screw terminals for use with pre-assembled harnesses, external adjustment of the output voltage as well as various auxiliary functions are available as options.

The letter E stands for improved EMC performance of LW models. Models without E are obsolete.

Model Selection

Table 1: Standard models

Output 1		Output 2		Output Power	Operating Input Voltage	Type Designation[6]	Efficiency	Options[3, 5]
$V_{o1\ nom}$ [VDC]	$I_{o1\ nom}$ [A]	$V_{o2\ nom}$ [1] [VDC]	$I_{o2\ nom}$ [A]	$P_{o\ nom}$ [W]	$V_{i\ min} – V_{i\ max}$		η_{min} [8] [%]	
12.35	7.5	-	-	93	85 [2] – 264 VAC, 47 – 63 Hz [4], 90 [2] – 350 VDC [7]	LWR1301-6EG [3]	83	R, D1, D2, D5, M1, M2, F, K2, non-G
12.35	14	-	-	173		LWN1301-6EG [3]	83	
24.7	5	-	-	124		LWR1601-6EG	87	
24.7	10	-	-	247		LWN1601-6EG	87	
37.05	3.3	-	-	123		LWR1701-6EG [3]	88	
37.05	6.6	-	-	245		LWN1701-6EG [3]	88	
49.4	2.5	-	-	124		LWR1801-6EG	88	
49.4	5	-	-	247		LWN1801-6EG	88	
12.35	7	12.35	7	173		LWN2320-6EG [3]	83	
24.7	5	24.7	5	247		LWN2660-6EG	87	
37.05	3.3	37.05	3.3	245		LWN2770-6EG[3]	89	
49.4	2.5	49.4	2.5	247		LWN2880-6EG	89	
24.7	5	-	-	120	66 – 150 VDC	EWR1601-0G [9]	87	R, M1, M2, Q, K2, non-G
24.7	5	24.7	5	240		EWN2660-0G [9]	87	

1 R-input not connected.
2 For derating at low input voltage see section *Output Power Derating*.
3 For minimum quantity and lead times contact the Company.
4 The converters have been tested up to 440 Hz; operation at $16^{2}/_{3}$ Hz is also possible, but the output ripple is slightly higher. For questions when operating at frequencies <47 Hz or >63 Hz, consult the Company.
5 On double-output models the options R, M2, D1, D2, D5 are related to the second output only.
6 Improved EMC performance for LWN/LWR models.
7 $V_i \leq 250$ VDC for models with option F
8 Min. efficiency at $V_{i\ nom}$, $I_{o\ nom}$, and T_A = 25 °C. Typical values are approx. 2% better.
9 EWN and EWR models are designed for railway applications according to EN 50155 and EN 50121.

Not for new designs (NFND) or End of Life (EOL).

© 2026 Bel Fuse Inc. BCD20020-G_AJ 4 March 2026

Downloaded from Arrow.com.

W Series

125, 250 Watt AC-DC & DC-DC DIN-Rail Converters

Table 2: Battery charger models (M1 included)

Output Voltage			Nominal Output Values			Operating Input Voltage	Type Designation [6]	Efficiency	Options [3]
V_{Bat} [VDC]	$V_{o\,safe}$ [1] [VDC]	$V_{o\,max}$ [VDC]	$V_{o\,nom}$ [5] [VDC]	$I_{o\,nom}$ [5] [A]	$P_{o\,nom}$ [5] [W]	$V_{i\,min} – V_{i\,max}$		η_{min} [8] [%]	
12	12.84 [1]	14.65	13.8	7.5	104	85 [2] – 264 VAC, 47 – 63 Hz [4], 90 [2] – 350 VDC [7]	LWR1140-6EM1G [3]	83	F, K2, non-G
				14	194		LWN1140-6EM1G [3]	85	
24	25.68 [1]	29.3	27.3	4.2	115		LWR1240-6EM1G	86	
				8.4	230		LWN1240-6EM1G	85	
36	38.52 [1]	43.95	40.88	2.8	115		LWR1840-6EM1G [3]	86	
				5.6	230		LWN1840-6EM1G [3]	86	
48	51.36 [1]	58.6	54.5	2.1	115		LWR1740-6EM1G	86	
				4.2	230		LWN1740-6EM1G	87	

1 Setting voltage (typ.) with open R-input
2 For derating at low input voltage, see section *Output Power Derating*.
3 For minimum quantity and lead times, contact the Company.
4 The converters have been tested up to 440 Hz; for operating frequency <47 Hz or >63 Hz consult the Company.
5 Nominal output figures, calculated with a cell voltage of 2.27 V at 20 °C.
6 Improved EMC performance.
7 $V_i \leq 250$ VDC for models with option F.
8 Min. efficiency at $V_{i\,nom}$, $V_{o\,nom}$, $I_{o\,nom}$, and T_A = 25 °C. Typical values are approx. 2% better.

Not for new designs (NFND) or End of Life (EOL).

Part Number Description

L W N 2 6 6 0 -6 E D1 F K2 G

Input voltage range ..... E, L
Series ..... W
Nominal output power
125 W ..... R
250 W ..... N
Number of outputs 1, 2
Type specification ..... 000 – 999
Operational ambient temperature range T_A
–40 to 60 °C ..... -6
EW or customer-specific ..... -0, -5
Improved EMC performance ..... E
Options
Output voltage control input [1] ..... R
Save data signal [1] D1, D2, D5
Multiple functions via D-SUB connector [1] . M1, M2
Built-in second fuse, input diode ..... F, Q
System connector K2
RoHS compliant for all six substances [2] ..... G

1 Only one of these options is possible.
2 Models without the suffix G (non-G option) do not use lead-free solder.

Note: The sequence of options must follow the order above.

Not for new designs (NFND) or End of Life (EOL).

Example: LWN2660-6ED1FG: Power factor corrected AC-DC converter, operating input voltage range 85 – 264 VAC, 2 electrically isolated and individually regulated outputs, each providing 24.7 V, 5 A, improved EMC performance, options D1, F and RoHS compatible for all 6 substances.

© 2026 Bel Fuse Inc. BCD20020-G_AJ 4 March 2026

Downloaded from Arrow.com.

W Series

125, 250 Watt AC-DC & DC-DC DIN-Rail Converters

Product Marking

Basic type designation, applicable safety approval and recognition marks, CE mark, warnings, pin designation, company logo.

Specific type designation, input voltage range, nominal output voltages and currents, degree of protection, batch number, serial number and data code including production site, version, and date of production.

Functional Description

The W Series converters are primary controlled AC-DC or DC-DC flyback converters with a constant switching frequency of 130 kHz. The power-factor-corrected single-step conversion of the input voltage to a low output voltage results in extremely high efficiency. Depending upon the output power, the converters are fitted with one (125 W) or two (250 W) powertrains. Models with two powertrains have one or two outputs. Double-output models exhibit individually regulated powertrains.

The input voltage is fed via fuse, filter, and rectifier to the main transformer, designed in planar technique. The input filter with very small input capacitance generates virtually no inrush current. An input transient suppressor protects the converter against high voltage peaks and surges. Input over- and undervoltage lockout as well as input current limitation protect the converter from operation outside of its specification. The input voltage waveform is sensed by the primary control logic to allow active power factor correction, forcing the input current to follow the input voltage waveform.

The secondary side of the main transformer supplies via the rectifier diode a large electrolytic output storage capacitor providing for the hold-up time. Double-output models exhibit an individual control logic each. The output voltage and the output current are measured and fed back to the primary control logic via an optocoupler. A second control loop monitors the output voltage. It disables the output in the case of a failure in the control logic and limits the output voltage.

Built-in temperature sensors monitor the internal temperature of each powertrain. If the temperature exceeds the limit, the converter reduces the output power continuously to keep the temperature below its limit. A green LED on the front cover confirms the presence of the output voltage(s).

The R input (option R, M1, or M2) allows for external adjustment of the output voltage by means of a resistor or an external voltage source. An external sensor can be connected to the R input and allows for temperature-controlled battery charging (see *Accessories*).

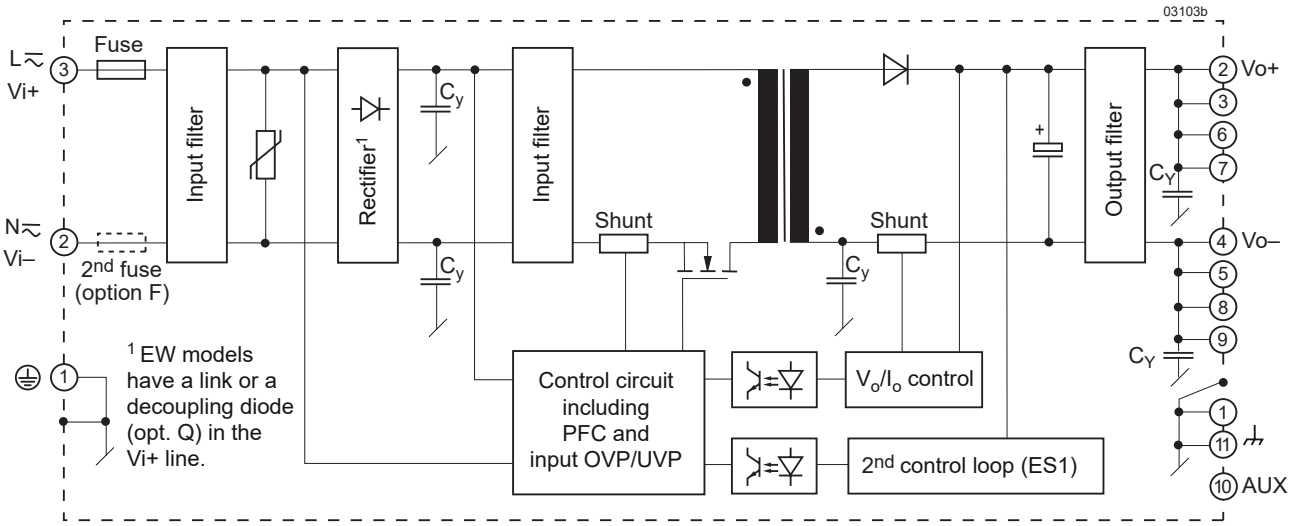

Fig. 1
Single-output converters (125 W).

© 2026 Bel Fuse Inc. BCD20020-G_AJ 4 March 2026

Downloaded from Arrow.com.

W Series

125, 250 Watt AC-DC & DC-DC DIN-Rail Converters

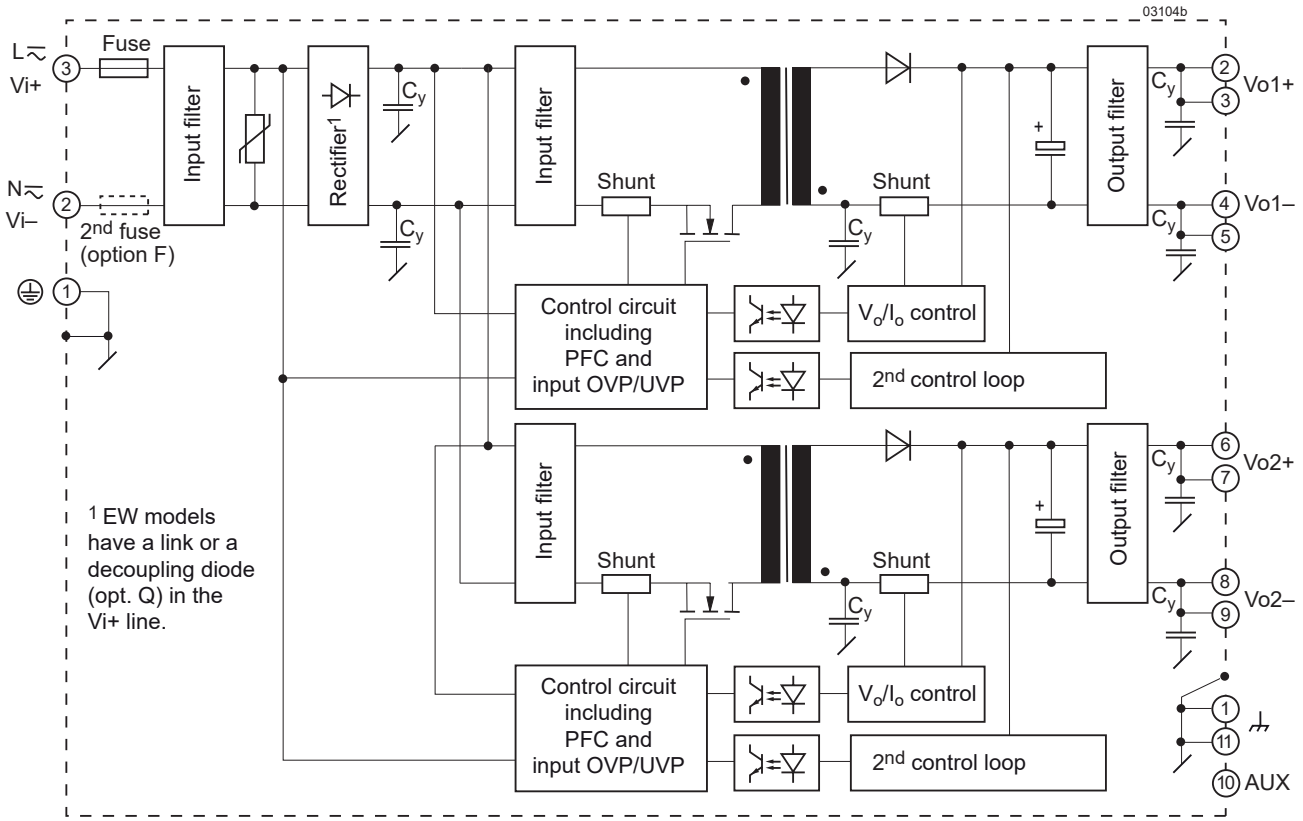

Fig. 2
250 W converters. The figure shows a double-output model.
For the pinout of 250 W single-output models, see fig. 1 or table 13.

© 2026 Bel Fuse Inc. BCD20020-G_AJ 4 March 2026

Downloaded from Arrow.com.

W Series

125, 250 Watt AC-DC & DC-DC DIN-Rail Converters

MELCHER™

Electrical Input Data

General conditions:
T_A = 25 °C, unless T_C is specified.

Table 4a: Input data of LW models

Input			LWR						LWN						Unit
			AC Input			DC Input			AC Input			DC Input			
Characteristics		Conditions	min	typ	max	min	typ	max	min	typ	max	min	typ	max	
V_i	Operating input voltage range	$I_o = 0 - I_{o\,nom}$ $T_c - T_{c\,max}$	85[2]		264	90[2]		350[3]	85[2]		264	90[2]		350[3]	V
$V_{i\,nom}$	Rated input voltage range		100	(230)	240		220		100	(230)	240		220		
f_i	Rated input frequency[1]			50 – 60			-			50 – 60			-		Hz
I_i	Input current	$I_{o\,nom}$, $V_i = V_{i\,nom}$		0.63			0.65			1.25			1.3		A
		$I_{o\,nom}$, $V_i = V_{i\,min}$		1.75			1.67			3.5			3.3		
P_{i0}	No-load input power	$V_{i\,min} - V_{i\,max}$		1.2			0.9			1.3			1		W
I_{inrush}	Inrush current	$V_{i\,max}$, $t > 0.1$ ms		3			3			5			5		A
C_i	Input capacitance			5			5			6			6		µF
PF	Power factor	$V_{i\,nom}$ = 230 V, $I_{o\,nom}$	0.86[4]				-		0.86[4]				-		
$V_{i\,RFI}$	Conducted input RFI	EN 55011 / 55032 $V_{i\,nom}$, $I_{o\,nom}$		A			A			A			A		
	Radiated input RFI			A			A			A			A		
f_{switch}	Switching frequency			130			130			130			130		kHz

[1] For operating frequencies <47 Hz and >63 Hz consult the Company. The converters have been tested up to 440 Hz.
[2] Output power derating at low input voltage and/or high case temperature T_C (see *Output power derating*).
[3] $V_i \leq 250$ VDC for models with option F.
[4] Models with 12 V output: ≥0.70 for LWR, ≥0.75 for LWN

Table 4b: Input data of EW models

Input			EWR			EWN			Unit
			DC Input			DC Input			
Characteristics		Conditions	min	typ	max	min	typ	max	
V_i	Operating input voltage range	$I_o = 0 - I_{o\,nom}$ $T_c - T_{c\,max}$	66		150[1]	66		150[1]	V
$V_{i\,nom}$	Rated input voltage range			110			110		
V_{UVT}	Undervoltage trigger		54		60	54		60	
I_i	Input current	$I_{o\,nom}$, $V_i = V_{i\,nom}$		1.25			2.5		A
		$I_{o\,nom}$, V_i = 66 V		2.2			4.4		
P_{i0}	No-load input power	$V_{i\,min} - V_{i\,max}$		0.8			1.3		W
I_{inrush}	Inrush current	$V_{i\,max}$, $t > 0.1$ ms		6			12		A
C_i	Input capacitance			2.5			4.5		µF
$V_{i\,RFI}$	Conducted input RFI	EN 55011 / 55032 $V_{i\,nom}$, $I_{o\,nom}$		A			A		
	Radiated input RFI			A			A		
f_{switch}	Switching frequency			130			130		kHz

[1] $V_i \leq 168$ VDC for 3 s. Overvoltage trigger adjusted to 170 – 182 V.

© 2026 Bel Fuse Inc. BCD20020-G_AJ 4 March 2026

Downloaded from Arrow.com.

Output Power Derating

The output power of LW models must be decreased at low input voltage and/or powertrain temperature above 125 °C.

The powertrain temperature depends on the output power, the input voltage, and the cooling method. At low input voltage the losses increase. At the maximum specified environment temperature T_A free air convection cooling might be insufficient approaching maximum ambient conditions. As a result, the output power has to be reduced according to the tables below.

Note: The measurements have been made by the approval boards with free air convection cooling according to 62368-1 3rd edition specified ambient temperature T_A and with the converter built in a cardboard box according to UL 508 and a specified temperature outside the box T_{out}.

The tables give a correlation between T_A or T_{out} and the case temperature T_C (measuring point T_C see *Mechanical Data*). For models not specified, please contact the Company.

Table 5a: P_o derating according to UL 60950-1 2nd edition at T_A = 60 °C, or according to UL 508 at T_{out} = 50 °C

Model	$P_{o\ nom}$	$T_{C\ max}$	Derate below		derate by
	[W]	[°C]	V_i [VAC]	V_i [VDC]	[W/V]
LWR1601-6E	124	80	113	100	-0.9
LWN1601/2660-6E	247	89	133	118	-1.4
LWR1701-6E	123	80	108	98	-0.9
LWN1701-6E	245	89	125	115	-1.4
LWR1801-6E	124	80	103	95	-0.9
LWN1801/2880-6E	247	89	125	115	-1.4

Table 5b: P_o derating according to UL 60950-1 2nd edition at T_A = 50 °C, or according to UL 508 at T_{out} = 40 °C

Model	$P_{o\ nom}$	$T_{C\ max}$	Derate below		derate by
	[W]	[°C]	V_i [VAC]	V_i [VDC]	[W/V]
LWR1601-6E	124	76	98	no derating	-0.9
LWN1601/2660-6E	247	86	115	105	-1.4
LWR1801-6E	124	76	93	no derating	-0.9
LWN1801/2880-6E	247	86	105	95	-1.4

Input Fuse and Protection

A fast-blow fuse (Schurter F 6.3A, 5 × 20 mm), protected by a sleeve, is connected to the input L or Vi+. EW models have a smaller fuse (250 V, 4 × 9 mm, SOC NT3 6.3A V009, UL-recognized E-39265). For DC input voltages above 250 V consult the *Installation Instructions*.

Converters with option F have large fuses (F6.3A, 5 × 20 mm). The DC input voltage for converters with option F is limited to 250 V.

A VDR and a symmetrical input filter form an effective protection against input transients.

An under- and an overvoltage lockout protect the converter, which is disabled below $V_{i\ min}$ and above $V_{i\ max}$ by an internally generated inhibit signal.

The built-in bridge rectifier (LW models) provides reverse polarity protection at the input if operated from DC.

EW models are protected by the (blowing) input fuse in connection with the body diode of the main transistor. Option Q offers a serial diode, but this reduces the efficiency by approx. 1%.

© 2026 Bel Fuse Inc. BCD20020-G_AJ 4 March 2026
Downloaded from Arrow.com.

Efficiency

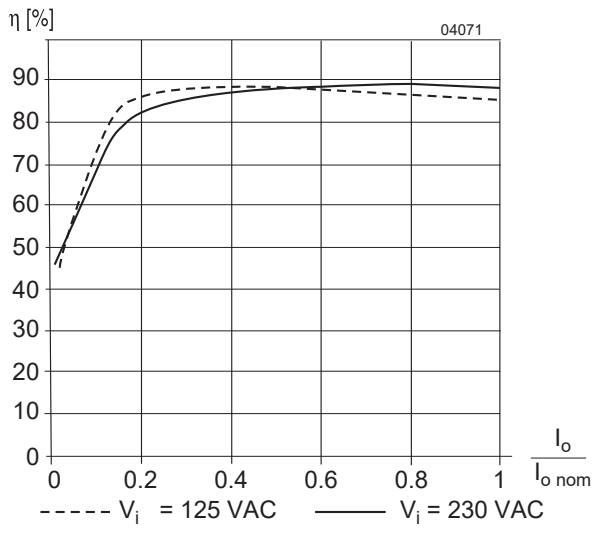

Fig. 3
Efficiency versus load (LWN2660-6)

Power Factor, Harmonics

All converters feature active power factor correction.

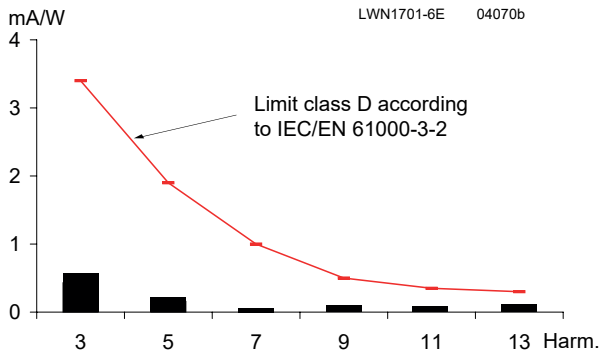

Fig. 4
Harmonic currents at input current, measured at V_i = 230 VAC, $I_o = I_{o\,nom}$ (LWN1701-6E).

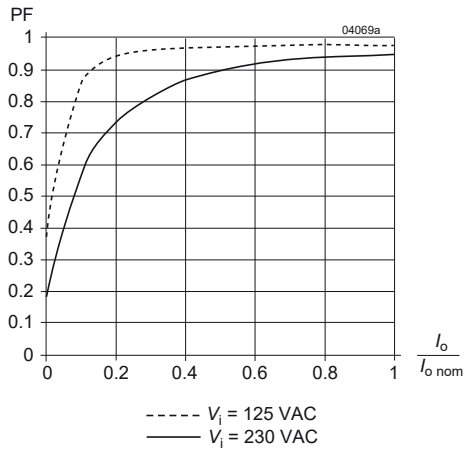

Fig. 5
Power factor versus load (LWN2660-6)

© 2026 Bel Fuse Inc. BCD20020-G_AJ 4 March 2026
Downloaded from Arrow.com.

W Series

125, 250 Watt AC-DC & DC-DC DIN-Rail Converters

MELCHER™

Electrical Output Data

Table 6a: Output data of 125 Watt standard models. General conditions: T_A = 25 °C, unless T_A is specified; R input open-circuit

Model			LWR1301			EWR / LWR1601			LWR1701			LWR1801			Unit
Characteristics		**Conditions**	**min**	**typ**	**max**	**min**	**typ**	**max**	**min**	**typ**	**max**	**min**	**typ**	**max**	
$V_{o\,nom}$	Output voltage nominal [1]	$V_{i\,nom}$, $I_{o\,nom}$ *		–		24.25	24.7	25.2	36.37	37.05	37.8	48.5	49.4	50.4	V
			12.27	12.35	12.43	24.55	24.7	24.85	36.82	37.05	37.28	49.1	49.4	49.7	
$V_{o\,worst}$	Output voltage range of tolerance	$V_{i\,min} – V_{i\,max}$, I_o = (0.1 – 1) $I_{o\,nom}$	12.0		12.9	24.0		25.8	36.0		38.7	48.0		51.6	
$V_{o\,L}$	Overvoltage protection		14.25*		15*	28.5		30	42.75		45	57		60	
$P_{o\,nom}$	Nominal output power	V_i = 100 V – $V_{i\,max}$		93*			124			123			124		W
$I_{o\,nom}$	Output current nominal			7.5*			5.0			3.3			2.5		A
$I_{o\,L}$	Output current limit [3]	$V_{i\,min} – V_{i\,max}$	7.58		8.6	5.1		5.7	3.37		3.8	2.53		2.9	
I_{op}	Output current boost [4]	typ. 1 s		11.3			7.5			5.0			3.75		
v_o	Ripple & noise EWR	V_i = 110 VDC, $I_{o\,nom}$		–			500			–			–		mV_{pp}
	Ripple & noise LWR	V_i = 230 VAC, f_i = 50 Hz, $I_{o\,nom}$		100			100			100			100		
				1100[2]			1100[2]			1200[2]			1200[2]		
$\Delta V_{o\,u}$	Static line regulation	100 V – $V_{i\,max}$, $I_{o\,nom}$		±0.08			±0.1			±0.15			±0.15		V
$\Delta V_{o\,l}$	Static load regulation (droop)	$V_{i\,nom}$ I_o = (0.1 – 1) $I_{o\,nom}$		–0.2			–0.4			–0.6			–0.8		
v_{od}	Dynamic load regulation Voltage deviation	$V_{i\,nom}$, I_o = (0.5 ↔ 1) $I_{o\,nom}$		±1			±1.2			±1.5			±1.8		
	Recovery time			40			40			80			80		ms
α_{vo}	Temperature coefficient	$T_{C\,min} – T_{C\,max}$		±0.02			±0.02			±0.02			±0.02		%/K
t_{or}	Start-up time	V_i = 0 → $V_{i\,nom}$, $I_{o\,nom}$		700			700			700			700		ms
$t_{oh\,min}$	Hold-up time	$I_{o\,nom}$, $V_{o\,nom}$ → 0.8 $V_{o\,nom}$		10			6 / 15			20			25		

* Standard models with option M or R
1 Setting voltage with open R-input
2 Superimposed low frequency ripple at 2 • f_i
3 Rectangular current limit characteristic (continuous operation)
4 Short-term peak power capability 150 % of $P_{o\,nom}$ for approx. 1 s

© 2026 Bel Fuse Inc. BCD20020-G_AJ 4 March 2026

Downloaded from Arrow.com.

Table 6b: Output data of 250 Watt single-output standard models. General conditions as in table 6a

Model			LWN1301			LWN1601			LWN1701			LWN1801			Unit
Characteristics		**Conditions**	**min**	**typ**	**max**	**min**	**typ**	**max**	**min**	**typ**	**max**	**min**	**typ**	**max**	
$V_{o\,nom}$	Output voltage nominal [1]	$V_{i\,nom}$, $I_{o\,nom}$ *		–		24.25	24.7	25.2	36.37	37.05	37.8	48.5	49.4	50.4	V
			12.27	12.35	12.43	24.55	24.7	24.85	36.82	37.05	37.28	49.1	49.4	49.7	
$V_{o\,worst}$	Output voltage range of tolerance	$V_{i\,min} - V_{i\,max}$, $I_o = (0.1 - 1)\ I_{o\,nom}$	12.0		12.9	24.0		25.8	36.0		38.7	48.0		51.6	
$V_{o\,L}$	Overvoltage protection		14.25*		15*	28.5		30	42.75		45	57		60	
$P_{o\,nom}$	Nominal output power	$V_i = 100\ V - V_{i\,max}$		173*			247			245			247		W
$I_{o\,nom}$	Output current nominal			14*			10			6.6			5.0		A
$I_{o\,L}$	Output current limit [3]	$V_{i\,min} - V_{i\,max}$	14.1*		16*	10.1		11.4	6.7		7.6	5.1		5.7	
I_{op}	Output current boost [4]	typ. 1 s		21			15			10			7.5		
v_o	Ripple & noise	$V_i = 230$ VAC, $f_i = 50$ Hz, $I_{o\,nom}$		100			100			100			100		mV_{pp}
				1100 [2]			1100 [2]			1200 [2]			1200 [2]		
$\Delta V_{o\,u}$	Static line regulation	$100\ V - V_{i\,max}$, $I_{o\,nom}$		±0.08			±0.1			±0.15			±0.15		V
$\Delta V_{o\,l}$	Static load regulation (droop)	$V_{i\,nom}$, $I_o = (0.1 - 1) I_{o\,nom}$		–0.2			–0.4			–0.6			–0.8		
v_{od}	Dynamic load regulation Voltage deviation	$V_{i\,nom}$, $I_o = (0.5 \leftrightarrow 1)\ I_{o\,nom}$		±1			±1.2			±1.5			±1.8		
	Recovery time			40			40			80			80		ms
α_{vo}	Temperature coefficient	$T_{C\,min} - T_{C\,max}$		±0.02			±0.02			±0.02			±0.02		%/K
t_{or}	Start-up time	$V_i = 0 \rightarrow V_{i\,nom}$, $I_{o\,nom}$		700			700			700			700		ms
$t_{oh\,min}$	Hold-up time	$I_{o\,nom}$, $V_{o\,nom} \rightarrow 0.8\ V_{o\,nom}$		10			15			20			25		

Table 6c: Output data of 250 Watt double-output standard models. General conditions as in table 6a

Model			LWN2320			EWN/LWN2660			LWN2770			LWN2880			Unit
Characteristics		**Conditions**	**min**	**typ**	**max**	**min**	**typ**	**max**	**min**	**typ**	**max**	**min**	**typ**	**max**	
$V_{o\,nom}$	Output voltage nominal [1]	$V_{i\,nom}$, $I_{o\,nom}$ *		–		24.25	24.7	25.2	36.37	37.05	37.8	48.5	49.4	50.4	V
			12.27	12.35	12.43	24.55	24.7	24.85	36.82	37.05	37.28	49.1	49.4	49.7	
$V_{o\,worst}$	Output voltage range of tolerance	$V_{i\,min} - V_{i\,max}$, $I_o = (0.1 - 1)\ I_{o\,nom}$	12.0		12.9	24.0		25.8	36.0		38.7	48.0		51.6	
$V_{o\,L}$	Overvoltage protection		14.25*		15*	28.5		30	42.75		45	57		60	
$P_{o\,nom}$	Nominal output power	$V_i = 100\ V - V_{i\,max}$		173*			247			245			247		W
$I_{o\,nom}$	Output current nominal			2 x 7*			2 x 5			2 x 3.3			2 x 2.5		A
$I_{o\,L}$	Output current limit [3]	$V_{i\,min} - V_{i\,max}$	7.1*		8.0*	5.1		5.7	3.37		3.8	2.53		2.9	
I_{op}	Output current boost [4]	typ. 1 s		2 x 10.5*			2 x 7.5			2 x 5.0			2 x 3.75		
v_o	Ripple & noise	$V_i = 230$ VAC, $f_i = 50$ Hz, $I_{o\,nom}$		100			100 [5]			100			100		mV_{pp}
				1100 [2]			1100 [2]			1200 [2]			1200 [2]		
$\Delta V_{o\,u}$	Static line regulation	$100\ V - V_{i\,max}$, $I_{o\,nom}$		±0.08			±0.1			±0.15			±0.15		V
$\Delta V_{o\,l}$	Static load regulation (droop)	$V_{i\,nom}$, $I_o = (0.1 - 1) I_{o\,nom}$		–0.2			–0.4			–0.6			–0.8		
v_{od}	Dynamic load regulation Voltage deviation	$V_{i\,nom}$, $I_o = (0.5 \leftrightarrow 1)\ I_{o\,nom}$		±1			±1.2			±1.5			±1.8		
	Recovery time			40			40			80			80		ms
α_{vo}	Temperature coefficient	$T_{C\,min} - T_{C\,max}$		±0.02			±0.02			±0.02			±0.02		%/K
t_{or}	Start-up time	$V_i = 0 \rightarrow V_{i\,nom}$, $I_{o\,nom}$		700			700			700			700		ms
$t_{oh\,min}$	Hold-up time	$I_{o\,nom}$, $V_{o\,nom} \rightarrow 0.8\ V_{o\,nom}$		10			6 / 15			20			25		

* Standard models with option M or R
1 Setting voltage with open R-input
2 Superimposed low frequency ripple at $2 \cdot f_i$
3 Rectangular current limit characteristic (continuous operation)
4 Short-term peak power capability 150% of $P_{o\,nom}$ for approx. 1s
5 EWN2660: 500 mV @ V_i = 110 VDC

Downloaded from Arrow.com.

W Series

125, 250 Watt AC-DC & DC-DC DIN-Rail Converters

Table 7a: Output data of 125 Watt battery charger models. General conditions: T_A = 25 °C, unless T_A is specified; R input left open-circuit, unless otherwise specified

Model			LWR1140-6EM1			LWR1240-6EM1			LWR1840-6EM1			LWR1740-6EM1			Unit
Characteristics		**Conditions**	**min**	**typ**	**max**	**min**	**typ**	**max**	**min**	**typ**	**max**	**min**	**typ**	**max**	
$V_{o\,safe}$	Output setting voltage [1]	$V_{i\,nom}$, $I_{o\,nom}$	12.25	12.84	13.15	24.5	25.68	26.3	36.75	38.52	39.45	49	51.36	52.6	V
V_{Bat}	Output voltage (max) controlled by R input	$V_{i\,min} - V_{i\,max}$, $I_o = (0.1 - 1)\ I_{o\,nom}$		14.65			29.3			43.95			58.6		
$V_{o\,L}$	Overvoltage protection		15.45		16.25	30.9		32.5	46.35		48.75	61.8		65	
$P_{o\,nom}$	Nominal output power	$V_i = 100\ V - V_{i\,max}$		104			115			115			115		W
$I_{o\,nom}$	Output current nominal			7.5			4.2			2.8			2.1		A
$I_{o\,L}$	Output current limit [3]	$V_{i\,min} - V_{i\,max}$	7.58		8.6	4.24		4.8	2.9		3.3	2.2		2.5	
I_{op}	Output current boost[4]	typ. 1 s		11.3			6.3			4.2			3.2		
v_o	Ripple & noise	V_i = 230 VAC, f_i = 50 Hz, $I_{o\,nom}$		100			100			100			100		mV_{pp}
				1100[2]			1100[2]			1200[2]			1200[2]		
$\Delta V_{o\,u}$	Static line regulation	100 V – $V_{i\,max}$, $I_{o\,nom}$		±0.08			±0.1			±0.15			±0.15		V
$\Delta V_{o\,l}$	Static load regulation (droop)	$V_{i\,nom}$, $I_o = (0.1 - 1) I_{o\,nom}$		–0.2			–0.4			–0.6			–0.8		
v_{od}	Dynamic load regulation Voltage deviation	$V_{i\,nom}$, $I_o = (0.5 \leftrightarrow 1)\ I_{o\,nom}$		±1.2			±1.2			±1.6			±1.9		
	Recovery time			40			40			80			80		ms
α_{vo}	Temperature coefficient	$T_{C\,min} - T_{C\,max}$		±0.02			±0.02			±0.02			±0.02		%/K
t_{or}	Start-up time	$V_i = 0 \rightarrow V_{i\,nom}, I_{o\,nom}$		700			700			700			700		ms

Table 7b: Output data of 250 Watt battery charger models. General conditions as in table 7a

Model			LWN1140-6EM1			LWN1240-6EM1			LWN1840-6EM1			LWN1740-6EM1			Unit
Characteristics		**Conditions**	**min**	**typ**	**max**	**min**	**typ**	**max**	**min**	**typ**	**max**	**min**	**typ**	**max**	
$V_{o\,safe}$	Output setting voltage [1]	$V_{i\,nom}$, $I_{o\,nom}$	12.25	12.84	13.15	24.5	25.68	26.3	36.75	38.52	39.45	49	51.36	52.6	V
V_{Bat}	Output voltage (max) controlled by R input	$V_{i\,min} - V_{i\,max}$, $I_o = (0.1 - 1)\ I_{o\,nom}$		14.65			29.3			43.95			58.6		
$V_{o\,L}$	Overvoltage protection		15.45		16.25	30.9		32.5	46.35		48.75	61.8		65	
$P_{o\,nom}$	Nominal output power	$V_i = 100\ V - V_{i\,max}$		194			230			230			230		W
$I_{o\,nom}$	Output current nominal			14			8.4			5.6			4.2		A
$I_{o\,L}$	Output current limit [3]	$V_{i\,min} - V_{i\,max}$	14.1		16.0	8.48		9.6	5.69		6.4	4.3		5.0	
I_{op}	Output current boost[4]	typ. 1 s		21			12.6			8.4			6.3		
v_o	Ripple & noise	V_i = 230 VAC, f_i = 50 Hz, $I_{o\,nom}$		100			100			100			100		mV_{pp}
				1100[2]			1100[2]			1200[2]			1200[2]		
$\Delta V_{o\,u}$	Static line regulation	100 V – $V_{i\,max}$, $I_{o\,nom}$		±0.08			±0.1			±0.15			±0.15		V
$\Delta V_{o\,l}$	Static load regulation (droop)	$V_{i\,nom}$, $I_o = (0.1 - 1) I_{o\,nom}$		–0.2			–0.4			–0.6			–0.8		
v_{od}	Dynamic load regulation Voltage deviation	$V_{i\,nom}$, $I_o = (0.5 \leftrightarrow 1)\ I_{o\,nom}$		±1.2			±1.2			±1.6			±1.9		
	Recovery time			40			40			80			80		ms
α_{vo}	Temperature coefficient	$T_{C\,min} - T_{C\,max}$		±0.02			±0.02			±0.02			±0.02		%/K
t_{or}	Start-up time	$V_i = 0 \rightarrow V_{i\,nom}, I_{o\,nom}$		700			700			700			700		ms

1 Setting voltage with open R-input = $V_{o\,safe}$
2 Superimposed low frequency ripple at 2 • f_i
3 Rectangular current limit characteristic (continuous operation)
4 Short-term peak power capability 150 % of $P_{o\,nom}$ for approx. 1 s

© 2026 Bel Fuse Inc. BCD20020-G_AJ 4 March 2026

Downloaded from Arrow.com.

Parallel Operation

Double-output models exhibit an independent control logic each. Both outputs can be connected in parallel, provided that options S (included in M1) and R are not used, since they influence only the 2nd output. The two power trains share the current due to their output voltage droop characteristic.

Up to 3 converters with the same output voltage may be operated in parallel. It is possible to parallel W Series with X Series converters.

Reasonable current sharing is achieved by the droop characteristic. Correct mode of operation is highly dependent upon the wiring of the converters and the impedance of these wires. Use wires with equal length and equal cross sections of min. 1.5 mm^2. The best results for parallel operation can be achieved with the wiring shown in fig. 6.

Parallel operation of single-output models using the option R (output voltage adjust) is possible, but not recommended. Refer to fig. 6; the connections between the pins 8 and 9 (both Vo–) should be as short as possible.

Note: Parallel operation is not possible, if a temperature sensor is connected, as the sensor eliminates the output voltage droop.

Note: For ORing diodes, we recommend to use Schottky diodes, mounted on a common heatsink to avoid thermal run away (or the use of double diodes).

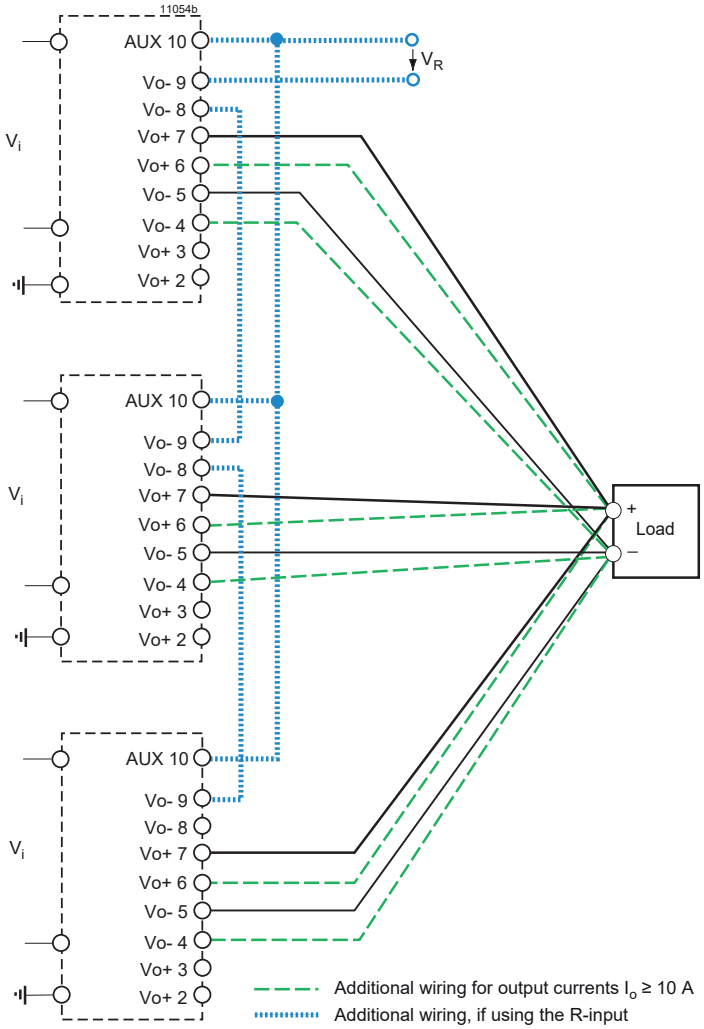

Fig. 6
Wiring for single-output converters connected in parallel.
Additional wiring for higher output currents and with the use of option R is shown.

Series Connection

Series connection of several outputs up to 150 V is possible. Exceeding an output voltage of 60 V, the output is not ES1.

© 2026 Bel Fuse Inc. BCD20020-G_AJ 4 March 2026
Downloaded from Arrow.com.

Output Characteristic and Protection

The output characteristic, individual for each powertrain, is rectangular with a droop to ease parallel operation; see fig. 7.

However, a 50% higher output current is possible for a short time, such allowing start-up of loads or charging of capacitors; see fig. 8.

Each output is independently protected against internal overvoltage by means of a second control loop. When the output voltage exceeds $V_{o\,L}$, the respective output is disabled.

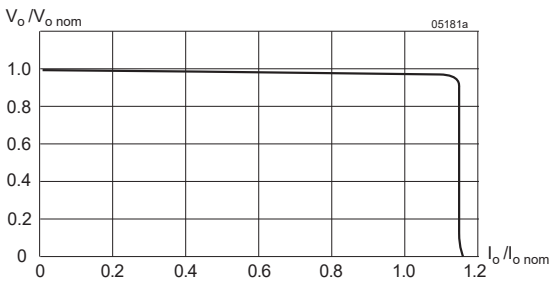

Fig. 7
V_o versus I_o (single-output model, typical values).

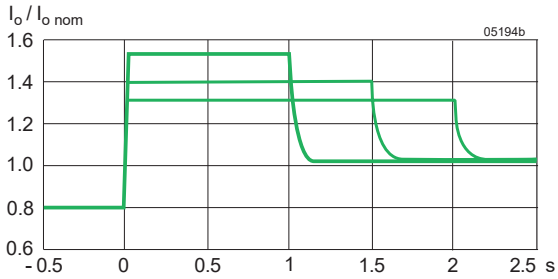

Fig. 8
Short term peak power characteristic: overcurrent versus time (typical values).

Overtemperature Protection

A built-in temperature sensor protects each powertrain is independently protected against overtemperature. When a certain temperature is reached, the concerned powertrain reduces its output power continuously.

Thermal Considerations

The thermal conditions are influenced by input voltage, output current, airflow, and temperature of surrounding components. $T_{A\,max}$ is therefore, contrary to $T_{C\,max}$, an indicative value only.

Caution: The installer must ensure that under all operating conditions T_C remains within the limits stated in the table *Temperature specifications*.

Note: Sufficient forced cooling allows T_A to be higher than $T_{A\,max}$ provided that $T_{C\,max}$ is not exceeded. It is recommended that continuous operation under worst case conditions of the following 3 parameters be avoided: Minimum input voltage, maximum output power, and maximum temperature.

Battery Charging and Temperature Sensor

The battery charger models exhibit the option M1 and have been designed to charge lead-acid batteries. The R-input allows for connecting a battery-specific temperature sensor, which provides temperature controlled adjust of the trickle charge voltage. This optimizes charging as well as battery life time. Depending upon the cell voltage and the temperature coefficient of the battery, different sensor types are available; see *Accessories*.

Note: Parallel operation is not possible, if the temperature sensor is connected to the paralleled outputs Vo+, as the sensor eliminates the output voltage droop.

However, it is possible to insert bleeding resistors in the Vo+ output lines of each converter in order to create a droop of approx. 0.6 V @ $I_{o\,nom}$ for 24 V outputs (1.2 V @ $I_{o\,nom}$ for 48V outputs), but this creates considerable power losses.

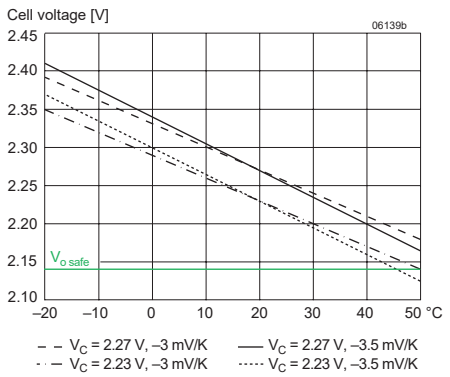

Fig. 9
Trickle charge voltage versus temperature for different temperature coefficients ($V_{o\,safe}$ with disconnected sensor)

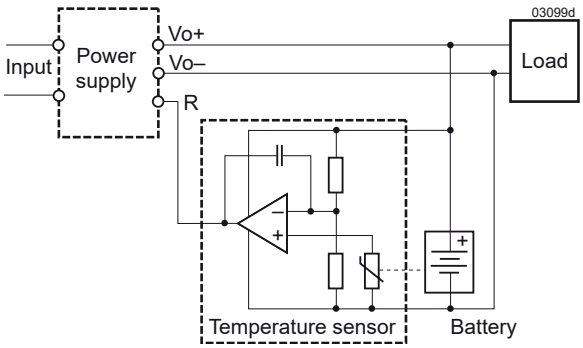

Fig. 10
Schematic circuit diagram of a system with battery backup and temperature-controlled charging.

© 2026 Bel Fuse Inc. BCD20020-G_AJ 4 March 2026
Downloaded from Arrow.com.

Electromagnetic Compatibility (EMC)

Compliant with EMC standards EN IEC 61204-3 / EN 50121-3-2.

Electromagnetic Immunity

The W Series has been successfully tested to the following specifications:

Table 8: Electromagnetic immunity (type tests)

Phenomenon	Standard	Level	Coupling mode [1]	Value applied	Waveform	Source imped.	Test procedure	In oper.	Perf. crit. [2]
Electrostatic discharge (to case)	IEC/EN 61000-4-2	4 [3]	contact discharge	8000 V_p	1/50 ns	330 Ω	10 positive and 10 negative discharges	yes	A
			air discharge	15000 V_p					
Electromagnetic field RF	IEC/EN 61000-4-3	3 [4]	antenna	10 V/m [4]	AM 80%, 1 kHz sinusoidal	N/A	80 – 1000 MHz	yes	A
	ENV 50204	3	antenna	10 V/m	50% duty cycle, 200 Hz repet. frequ.	N/A	900 ± 5 Mhz	yes	A
	IEC/EN 61000-4-3 (EW models)	[5]	antenna	20 V/m	AM 80%, 1 kHz sinusoidal	N/A	80 – 1000 MHz	yes	A
				10 V/m			1400 – 2100 MHz		
				5 V/m			2100 – 2500 MHz		
Electrical fast transients/burst	IEC/EN 61000-4-4	3	capacitive, o/c	±2000 V_p	bursts of 5/50 ns 5 kHz over 15 ms; burst period: 300 ms	50 Ω	60 s positive 60 s negative transients per coupling mode	yes	A
		3 [6]	±i/c, +i/–i direct coupling	±2000 V_p [6]					
Surges	IEC/EN 61000-4-5	3 [7]	+i/c, –i/c	±2000 V_p	1.2 / 50 µs	12 Ω	5 pos. & 5 neg. surges per coupling mode	yes	B
			+i/–i	±1000 V_p	1.2 / 50 µs	2 Ω			
Conducted disturbances	IEC/EN 61000-4-6	3 [8]	i, o, signal wires	10 VAC (140 dBµV)	AM 80% 1 kHz	150 Ω	0.15 – 80 MHz	yes	A
Power frequency magnetic field	IEC/EN 61000-4-8	–	–	100 A/m	50 and 60 Hz	–	x, y, and z axis	yes	A
Surges (EW models)	IEC/EN 50155:2001	wave A [9]	+i/c, –i/c	1800 V_p	5/50 µs	5 Ω	5 pos. and 5 neg. pulses	yes	A

1 i = input, o = output, c = case.
2 A = Normal operation, no deviation from specifications, B = Normal operation, temporary loss of function or deviation from specs. possible.
3 Exceeds EN 50121-3-2:2006 table 9.3 and EN 50121-4:2006 table 1.4.
4 EW models: 20 V/m, which corresponds to EN 50121-3-2:2006 table 9.1 and exceeds EN 50121-4:2006 table 1.1.
5 EW models only. Corresponds to EN 50121-3-2:2006 table 9.2 and EN 50121-4:2006 table 1.2 (compliance with digital mobile phones).
6 Corresponds to EN 50121-3-2:2006 table 7.2 and EN 50121-4:2006 table 2.2.
7 Complies with EN 50121-3-2:2006 table 7.3 and EN 50121-4:2006 table 2.3.
8 Corresponds to EN 50121-3-2:2006 table 8.1 and EN 50121-4:2006 table 3.1 (radio frequency common mode).
9 Corresponds to EN 50121-3-2:2000. Covers EN 50155:1995, RIA12, direct transients, waveform D (EW models only).

© 2026 Bel Fuse Inc. BCD20020-G_AJ 4 March 2026
Downloaded from Arrow.com.

W Series

125, 250 Watt AC-DC & DC-DC DIN-Rail Converters

Emissions

Table 9: Electromagnetic emissions for LW models with feature E: (type tests with LWN1701-6EG)

Phenomenon	Standards	Conditions	Results
Harmonics	EN 61000-3-2:2006	V_i = 230 V, $V_{o\ nom}$, $I_{o\ nom}$	Class A, D
Voltage fluctuation and flicker	EN 61000-3-3 + A2:2005	V_i = 230 V, $V_{o\ nom}$, $I_{o\ nom}$	Complied

Note: An external toroid ferrite core across the input lines reduces the emissions considerably.

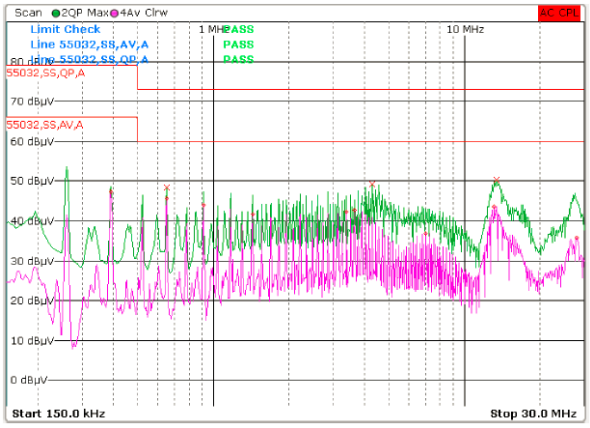

Fig. 11a
Conducted emissions of LW models with feature E: Disturbances at the phase input according to EN 55032, measured at $V_{i\ nom}$ and $I_{o\ nom}$. (LWN1701-6EG)

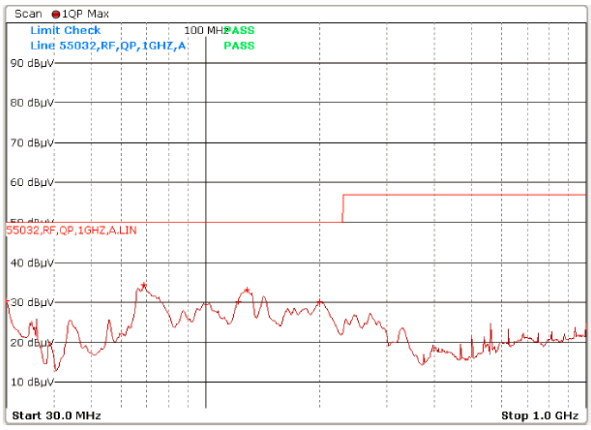

Fig. 11b
Radiated emissions measured according to EN 55032 for LW models with feature E (LWN1701-6EG), antenna 3 m distance, horizontal polarized)

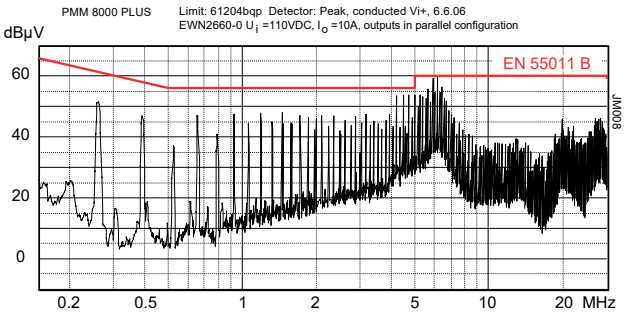

Fig. 12a
Conducted emissions of EW models: Disturbances (peak) at the phase input according to EN 55011, measured at $V_{i\ nom}$ and $I_{o\ nom}$. (EWN2660-0)

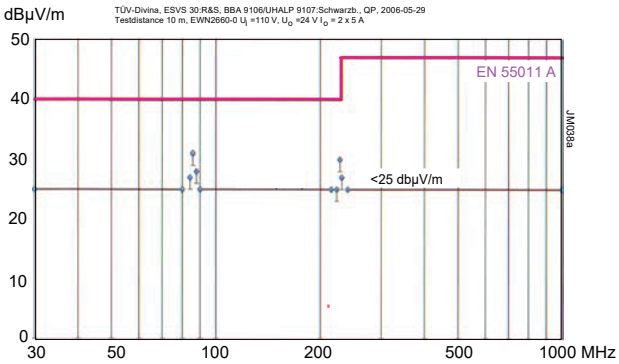

Fig. 12b
Radiated emissions of EW models, measured at $V_{i\ nom}$, $I_{o\ nom}$, accord. to EN 55011, antenna 10 m distance, (EWN2660-0)

© 2026 Bel Fuse Inc. BCD20020-G_AJ 4 March 2026

Downloaded from Arrow.com.

W Series

125, 250 Watt AC-DC & DC-DC DIN-Rail Converters

External EMC Filter for Models with Feature E

An external EMC filter can be connected to the inputs lines of the converter. However, a small choke has to be included in the phase line to avoid interferences between the internal and external filter, which would cause dramatically increased low harmonics.

The figure below shows the used external filter configuration consisting of the inlet filter KMF1.1241.11 (4 A, Schurter www.schurter.com) and the decoupling choke EPCOS B82111B0000C018, 11 µH, 4 A, 6 × 20 mm.

Note: This filter allows for connection of an IEC inlet and is available with 1 or 2 incorporated fuses. A similar filter with AMP terminals (6.3 × 20 mm) is also available (Schurter FMLB 5500.2028).

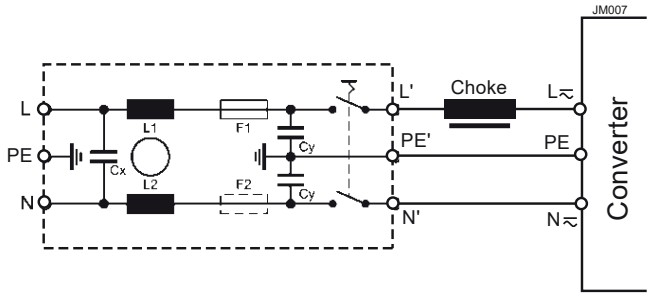

Fig. 13a
External filter to reduce conducted emissions of LW models with feature E (L1 = L2 = 1.6 mH, Cx = 47 nF, Cy = 2.2 nF)

Fig. 13b
External inlet filter

© 2026 Bel Fuse Inc. BCD20020-G_AJ 4 March 2026

Downloaded from Arrow.com.

Immunity to Environmental Conditions

Table 10: Mechanical stress and climatic

Test method		Standard	Test Conditions		Status
Cab	Damp heat steady state	IEC/EN 60068-2-78 MIL-STD-810D section 507.2	Temperature: Relative humidity: Duration:	$40^{\pm 2}$ °C $93^{+2/-3}$ % 56 days	Converter not operating
Kb	Salt mist, cyclic (sodium chloride NaCl solution)	IEC/EN 60068-2-52	Concentration: Duration: Conditions: Storage Duration:	5% (30 °C) 2 h per cycle 40°C, 93% rel. humidity 3 cycles of 22 h	Converter not operating
E b	Bump (half-sinusoidal)	IEC/EN 60068-2-29 MIL-STD-810D sect. 516.3	Acceleration amplitude: Bump duration: 6000 bumps:	25 g_n = 245 m/s^2 11 ms 1000 in each direction	Converter not operating, wall mounted [1]
			Acceleration amplitude: Bump duration: 6000 bumps:	10 g_n = 98.1 m/s^2 11 ms 1000 in each direction	Converter not operating, on DIN-rail [2]
Fc	Vibration (sinusoidal)	IEC/EN 60068-2-6 MIL-STD-810D sect. 514.3	Acceleration amplitude: Frequency (1 Oct/min): Test duration:	0.35 mm (10 – 60 Hz) 5 g_n = 49 m/s^2 (60 – 2000 Hz) 7.5 h (2.5 h each axis)	Converter operating, wall mounted [1]
			Acceleration amplitude: Frequency (1 Oct/min): Test duration:	0.25 mm (10 – 60 Hz) 2 g_n = 19 m/s^2 (60 – 2000 Hz) 7.5 h (2.5 h each axis)	Converter operating, on DIN-rail [2]
Ea	Shock (half-sinusoidal)	IEC/EN 60068-2-27 MIL-STD-810D sect. 516.3	Acceleration amplitude: Bump duration: Number of bumps:	50 g_n = 490 m/s^2 11 ms 18 (3 in each direction)	Converter not operating, wall mounted [1]
	Shock	EN 50155/EN 61373 [3] sect. 10, class A and B body mounted [4]	Acceleration amplitude: Bump duration: Number of bumps:	5.1 g_n 30 ms 18 (3 in each direction)	Converter operating, on DIN-rail [2]
Fh	Random vibration broad band, digital control & guidance	IEC/EN 60068-2-64	Acceleration spectral density: Frequency band: Acceleration magnitude: Test duration:	0.05 g_n^2/Hz 8 – 500 Hz 4.9 $g_{n\,rms}$ 3 h (1 h each axis)	Converter operating, wall mounted [1]
Fda	Random vibration wide band, high reproducibility	IEC/EN 60068-2-35	Acceleration spectral density: Frequency band: Acceleration magnitude: Test duration:	0.01 g_n^2/Hz 20 – 500 Hz 2.2 $g_{n\,rms}$ 1.5 h (0.5 h each axis)	Converter operating, mounted on DIN-rail [2]
	Simulated long life time testing at increased random vibration levels	EN 50155/EN 61373 [3] sect. 8 and 9, class B body mounted [3]	Acceleration spectral density: Frequency band: Acceleration magnitude: Test duration:	0.01 g_n^2/Hz 5 – 150 Hz 0.8 $g_{n\,rms}$ 1.5 h (0.5 h each axis)	Converter operating, mounted on DIN-rail [2]

[1] Wall-mounted with brackets UMB-W [HZZ00618]; see *Accessories*
[2] Fastened on a DIN-rail with 2 additional DIN-rail fixing brackets DMB-EWG, see *Accessories*. This covers also wall-mounting with brackets, because wall mounting performs better in vibration test.
[3] EW models (railway standards)
[4] Body mounted = chassis of a railway coach

Asia-Pacific +86 755 298 85888
EMEA +353 61 531 820
North America +1 866 513 2839
powersupport@belf.com
belfuse.com
© 2026 Bel Fuse Inc. BCD20020-G_AJ 4 March 2026
Downloaded from Arrow.com.

Temperatures

Table 11: Temperature specifications, valid for an air pressure of 800 - 1200 hPa (800 - 1200 mbar)

Model			LW models -6		EW models -0		Unit
Characteristics		**Conditions**	**min**	**max**	**min**	**max**	
T_A	Ambient temperature	Converter operating[1]	–40	60	–40	70 [3]	° C
T_C	Case temperature [2]		–40	90 [2]	–40	90 [3]	
T_S	Storage temperature	Non operational	–40	100	–40	100	

[1] See *Thermal Considerations*
[2] See table 5 P_o *derating*
[3] Mounted in vertical position

Failure Rates

Table 12: MTBF

Values at specified case temperature	Module types	Ground benign	Ground fixed		Ground mobile	Unit
		40 °C	40 °C	70 °C	50 °C	
MTBF [1]	LWR1xxx	892 000	180 000	197 000	68 000	h
	LWN1xxx	644 000	131 000	72 000	51 000	
	LWN2xxx	522 000	101 000	55 000	38 000	

[1] Calculated in accordance with MIL-HDBK-217E, notice 2.

© 2026 Bel Fuse Inc. BCD20020-G_AJ 4 March 2026
Downloaded from Arrow.com.

W Series

125, 250 Watt AC-DC & DC-DC DIN-Rail Converters

Mechanical Data

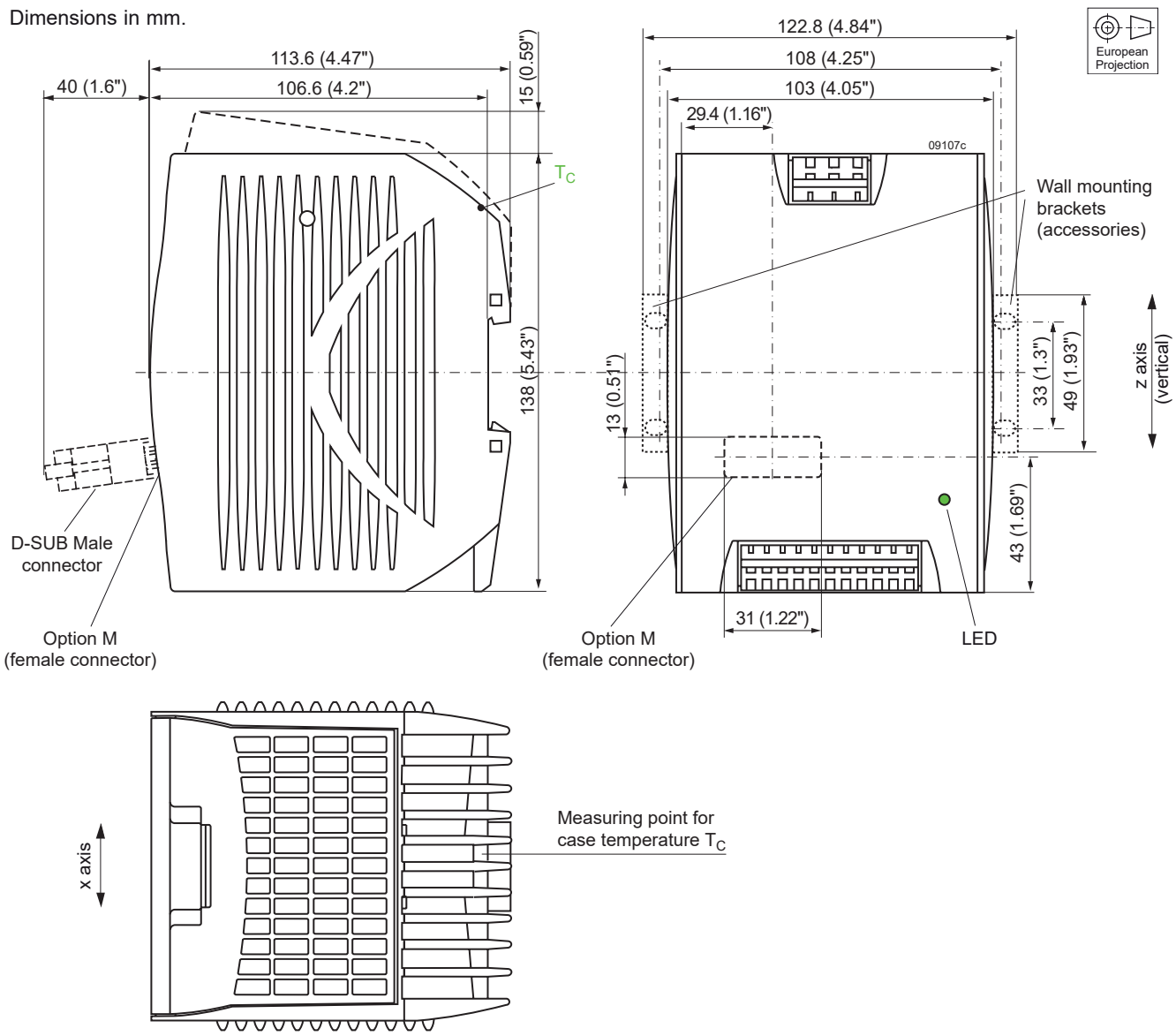

Fig. 14
Case W01
EWN/LWN: weight approx. 1400 g
EWR/LWR: weight approx. 1200 g
Case designed by ATP, Munich.

© 2026 Bel Fuse Inc. BCD20020-G_AJ 4 March 2026

Downloaded from Arrow.com.

Safety and Installation Instructions

Terminal Allocation

The terminal allocation tables define the electrical potential of the converters.

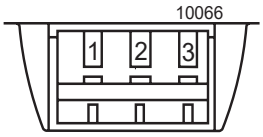

Fig. 15a
View of the input terminals (cage clamp style)

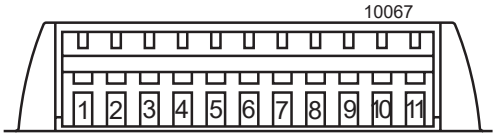

Fig. 15b
View of the output terminals (cage clamp style)

Table 13a: Input terminals of LW models

Pin no.	Pin designation	Electrical determination
1	⏚	Protective earth PE
2	N≈	Input neutral, DC negative
3	L≈	Input phase, DC positive

Table 13b: Input terminals of EW models

Pin no.	Pin designation	Electrical determination
1	⏚	Protective earth PE
2	Vi-	Input negative
3	Vi+	Input positive

Table 13c: Terminal allocation output side

Pin no.	Pin des.	Single output	Double output
1	⏚	Functional earth to load	Functional earth to load
2	+	Output positive	Output 1 positive
3	+	Output positive	Output 1 positive
4	–	Output negative	Output 1 negative
5	–	Output negative	Output 1 negative
6	+	Output positive	Output 2 positive
7	+	Output positive	Output 2 positive
8	–	Output negative	Output 2 negative
9	–	Output negative	Output 2 negative
10	AUX	Option	Option
11	⏚	Functional earth to load	Functional earth to load

Installation Instructions

The converters of the W Series are components, intended exclusively for inclusion within other equipment by professional installers. Installation must strictly follow the national safety regulations in compliance with the enclosure, mounting, creepage, clearance, casualty, markings and segregation requirements of the end-use application.

DIN-rail mounting is possible with the built-in snap-fit device on a DIN-rail. This fulfills the mechanical transport requirements as per ETSI 300019-1-2, class 2 (vertical).

To fulfill the requirements of IEC 721-3-2, class 2.1 (vertical), 2 additional fixing brackets HZZ00624-G (see *Accessories)* must be fitted on the bottom side of the DIN-rail. For heavy duty railway applications, we recommend installing all 4 fixing brackets HZZ00624-G.

Chassis or wall mounting is possible using the universal chassis-mounting brackets HZZ00618-G (see *Accessories*). Such installation complies with IEC 721-3-2, class 2.2 (vertical and horizontal).

Caution: Install the converters vertically, and make sure that there is sufficient airflow available for convection cooling. The minimum space to the next device should be: top/bottom: 30 mm, left/right: 20 mm.

The converters of the W Series are class I equipment: Input terminal 1 (⏚) and the output terminals 1 and 11 (⏚) are reliably connected to the case. For safety reasons it is essential to connect the input terminal 1 (⏚) with protective earth. Output terminals 1 and 11 can be used to connect the output voltage(s) or the load to functional earth.

© 2026 Bel Fuse Inc. BCD20020-G_AJ 4 March 2026
Downloaded from Arrow.com.

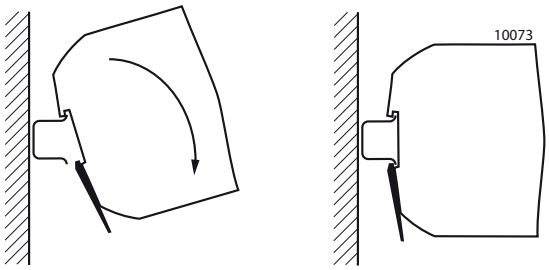

Fig. 16a
Snap-fit mounting to DIN-Rail.

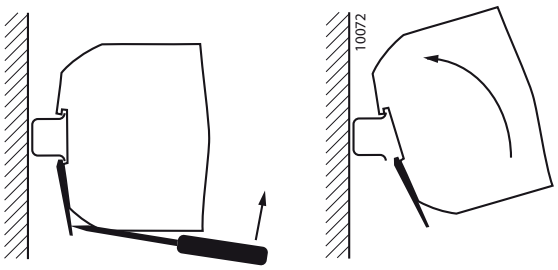

Fig. 16b
Dismounting from DIN-rail. Use proper tool (min. 3 mm screwdriver) and adequate force.

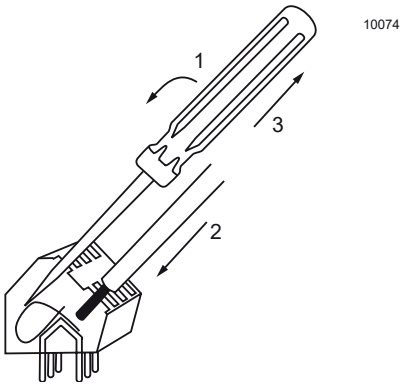

Fig. 17
Cage clamp terminals. Use 0.5 to 2.5 mm² (AWG 20 to 12) solid or stranded wires depending on local requirements.

The phase input (L≈ or Vi+) is internally fused; see *Input Fuse*. This fuse is designed to break an overcurrent in case of a malfunction of the converter and is not customer-accessible.

External fuses in the wiring to one or both input lines (L≈ and/or N≈) may be necessary to ensure compliance with local requirements. A built-in second fuse in the neutral path is available as option F.

A second fuse in the wiring to the neutral terminal N≈ or option F is needed if:

- Local requirements demand an individual fuse in each source line
- Neutral and earth impedance is high or undefined
- Phase and neutral of the mains are not defined or cannot be assigned to the corresponding terminals (L≈ to phase and N≈ to neutral).

Models with Option F: Caution! Double-pole/neutral fusing.

If the converters operate at source voltages above 250 VDC, an external fuse or a circuit breaker at system level should be installed.

Caution:

- Installation must strictly follow the national safety regulations.
- Do not open this apparatus!

Protection Degree and Cleaning Liquids

The protection degree of the converters is IP 20. Protective covers over input and output terminals are available on request; see *Accessories*.

Any penetration of liquid or foreign solid objects is to be prevented, since the converters are not hermetically sealed.

© 2026 Bel Fuse Inc. BCD20020-G_AJ 4 March 2026
Downloaded from Arrow.com.

Standards and Approvals

The converters of the LW Series with feature E were safety-approved to IEC/EN 62368-1 3rd edition and UL/CSA 60950-1 2nd edition (models without E: IEC/EN 62368-1 3rd edition).

The converters are UL508-listed components.

The EW models are safety-approved to IEC/EN 62368-1 3rd edition and UL/CSA 60950-1 2nd edition

The converters have been designed in accordance with said standards for:

- Class I equipment
- Power supply for building-in, vertical mounting on 35 mm DIN-rail or on a wall
- Overvoltage category II (III for 110 VAC supply)
- Basic insulation between input and case, based on 250 VAC
- Double or reinforced insulation between input and output, based on 250 VAC and 350 VDC.
- Functional insulation between outputs and case.
- Functional insulation between outputs.
- Pollution degree 2 environment.

The converters are subject to manufacturing surveillance in accordance with the above mentioned standards and with ISO9001:2015.

Operation at Frequencies Greater 60 Hz

The LW Series converters have been tested for operation up to 440 Hz. However, the Y and X caps are not approved to such frequency. The leakage currents are higher than at 60 Hz, whereas the output ripple voltage is lower.

Leakage Currents with AC Supply

Leakage currents flow due to internal leakage capacitance and RFI suppression Y-capacitors. The current values are proportional to the mains voltage and nearly proportional to the mains frequency. They are specified at maximum operating input voltage where phase, neutral, and protective earth are correctly connected as required for class I equipment.

Leakage current may exceed 5 mA, if f_i > 63 Hz.

Railway Applications

The W Series converters have been designed observing the railway standards EN 50155 and EN 50121. All boards are coated with a protective lacquer.

The EW Series is particularly suitable for connection to 110 V railway batteries.

Isolation

The electric strength test is performed in the factory as routine test in accordance with EN 62911 and IEC/EN 62368-1 3rd edition and should not be repeated in the field. The Company will not honor warranty claims resulting from incorrectly executed electric strength field tests.

Table 14: Isolation

Characteristics		Input to Case and Output(s)	Output(s) to Case	Output 1 to Output 2 and AUX	Unit
Electric strength test	Factory test ≥1 s	2.8 [1]	1.4	0.5	kVDC
	AC test voltage equivalent to factory test	2.0	1.0	0.35	kVAC
Insulation resistance		>300 [2]	>300 [2]	>100	MΩ

[1] In accordance with IEC/EN 62368-1 3rd edition, subassemblies are pretested with 4.2 kVDC.
[2] Tested at 500 VDC.

LED Indicator

A green LED is activated, when the output voltage V_o is within the normal operating tolerance band.

Note: This LED is also activated, when the converter is not powered by the input, but a loaded battery is connected to the output.

© 2026 Bel Fuse Inc. BCD20020-G_AJ 4 March 2026
Downloaded from Arrow.com.

Safety of Operator-Accessible Output Circuits

If the output circuit of a converter is operator accessible, it shall be a ES1 circuit according to 62368-1 3rd edition related safety standards.

The converters have ES1 output circuits up to an output voltage of 57.5 V. However, if the isolated outputs are connected to another voltage source or connected in series with a total of >57.5 V the outputs are hazardous.

It is the sole responsibility of the installer to ensure the compliance with the relevant and applicable safety regulations.

Description of Options

E designates LW models with improved EMC performance. Refer to the EC Declaration of Conformity. Feature E is standard for new designs.

Single options D1, D2, D5, R are available (as single choice options) on the AUX terminal (10), referenced to Vo–.

Option M1 and **M2** designate a combination of several options accessible via a D-SUB connector. Option M1 includes the function SD (shutdown).

Note: In double-output models, the options D1, D5, R, and SD concern only output 2.

Single Options Using the AUX Pin

The connection is shown in the figure below. For the description refer to *Adjustment of V_o or V_{o2}* (next section).

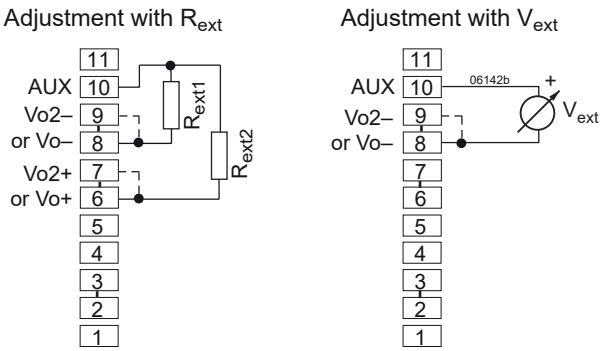

Fig. 18
Connection of adjust resistors or an external voltage source to adjust the output voltage V_o or V_{o2} (option M1 or M2 not fitted)

Multiple Options M1 or M2 via D-SUB Connector

The option board is suitable for applications, where several options are needed. Option M1 is standard for battery charger models, option M2 is suitable for applications without battery or for simple applications with battery.

Table 15: Pin allocation of the 9 pin D-SUB connector

Pin	Designation	Description
1	GND1[1]	System ground / common signal return
2	R	R input[3]
3	VCC[2]	Positive supply voltage (≈ output 2)
4	D1	Output voltage monitor $V_{o\ low\ D1}$[3]
5	D5	Output 2 voltage monitor $V_{o\ low\ D5}$[3]
6	SD	Shutdown[3]
7	D-adj	Adjustment of threshold values of D1 or D5
8	D2	Input voltage monitor $V_{i\ low}$
9	Sys-OK	System okay (all outputs are okay)

[1] Do not connect GND1 (pin 1) with the neg. output (–)
[2] Do not connect VCC (pin 3) with the positive output (+)
[3] In double-output models, R, D1, D5, SD concern output 2 only.

© 2026 Bel Fuse Inc. BCD20020-G_AJ 4 March 2026
Downloaded from Arrow.com.

Table 16a: Option board M1

Function	Description
R	Output voltage adjust [1]
D1	Output voltage monitor $V_{o\ low\ D1}$ [1]
D2	Input voltage monitor $V_{i\ low}$
D5	Output 2 voltage monitor [1] (battery deep discharged): $V_{o\ low\ D5}$
Sys-OK	System okay
SD	Shutdown [1]
D-adj	Adjustment of trigger values D1 and D5

[1] In double-output models, only output 2 is concerned.

Table 16b: Option board M2

Function	Description
R	Output voltage adjust [1]
D2	Input voltage monitor $V_{i\ low}$
D5	Output voltage monitor [1] (battery deep discharged): $V_{o\ low\ D5}$
D-adj	Adjustment of trigger values D1 and D5

[1] In double-output models, only output 2 is concerned.

D2: Input Voltage Monitor (Power Fail)

D2 monitors the input voltage V_i. When V_i drops below 65±3 VAC or 92 VDC, the D2 signal output is high impedance (open-collector, max. 50 V).

When V_i is greater then said level, the signal output D2 is conducting: $V_{D2} < 1.5$ V, $I_{D2\ max} < 50$ mA. D1: Output Voltage Monitor.

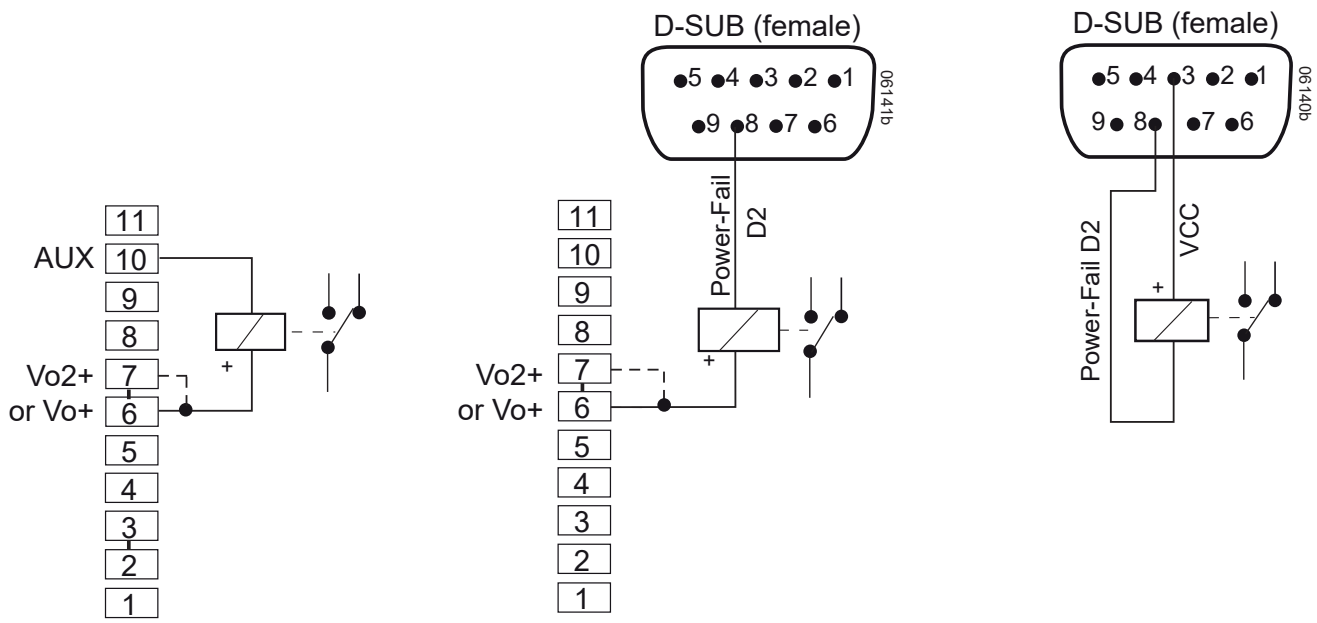

Fig. 19
Option D2: Examples of relay control to monitor a power failure.

D1: Output Voltage Monitor

D1 is intended for monitoring the bus voltage of a battery-buffered system. It indicates that the system is powered from the battery and can for instance be used as a warning signal or to switch off a part of the load. When the output voltage V_o (or V_{o2}) is greater than $V_{o\ low\ D1}$ specified in table 17, the D1 signal output is conducting: $V_{D1} < 1.5$ V, $I_{D1\ max} < 50$ mA.

When V_o is lower, the D1 signal output is high impedance (open-collector, max. 58.6 V). In double-output models, D1 monitors only output 2 (V_{o2}).

In applications without battery-buffering the D1 signal may not be suitable, since smaller dynamic load changes may cause D1 to trigger. For such applications, D5 with a trigger level of approx. 85% of $V_{o\ nom}$ should be chosen (e.g., for a bus voltage of 24.7 V: trigger level at 21 V).

© 2026 Bel Fuse Inc.

Downloaded from Arrow.com.

D5: System Voltage Monitor (Battery Low)

D5 monitors the output voltage V_o (V_{o2} in double-output models) or the lowest admissible voltage of a connected battery (battery deep discharge). The definition of D5 is similar to D1, but the trigger level is lower. When V_o (or V_{o2}) is greater than $V_{o\ low\ D5}$ specified in table 17, the D2 signal output is conducting:

$V_{D5} < 1.5$ V, $I_{D5\ max} < 50$ mA.

When V_o is lower, the D5 signal output is high impedance (open-collector, max. 58.6 V). In double-output models, D5 monitors only output 2 (V_{o2}).

In systems without battery support, D5 signals that V_o (or V_{o2}) is going to drop below a safe value.

In battery-buffered systems, D5 indicates that the battery has reached its deepest discharge level prior to getting damaged.

The D5 signal can be used for instance to disable loads, save data, or to start a controlled switch-off of running processes.

Table 17: Options D1 and D5: Trigger and switch-on levels

Model	Battery V_{Bat} [V]	$V_{o\ low\ D1}$		$V_{o\ low\ D5}$	
		trigger [V]	switch on [V]	trigger [V]	switch on [V]
LWR/LWN1140	12	11.5	12.1	10.5	12.1
LWR/LWN1240	24	23	24.2	21	24.2
LWR/LWN1840	36	34.4	36.3	31.5	36.3
LWR/LWN1740	48	46	48.4	42	48.4

Adjustment of Threshold Levels (D1/D5)

Pin 7 of the D-SUB connector allows for adjustment of the threshold levels of D1 and D5. Both levels are influenced by the voltage divider *R*x / *R*y. Resistor *R*x to pin 3 (VCC) lowers the levels, whereas *R*y to pin 1 (GND1) increases them (see fig. 20).

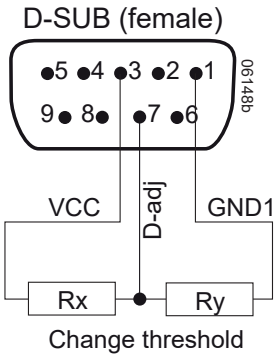

Fig. 20
Wiring to adjust both threshold levels of option D1 or D5

SD: Shutdown

Reduces the output power to approx. 1 W, but the converter is not fully disabled. In a no-load condition, V_o drops below 6.2 V; see fig. 21. In double-output models, only output 2 is influenced.

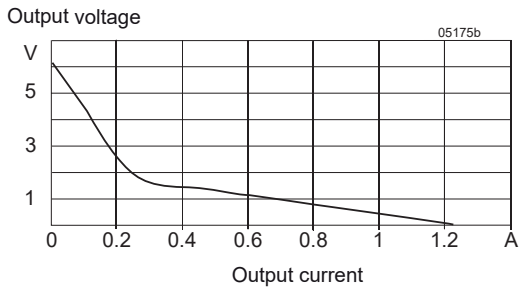

Fig. 21
Output voltage versus output current, while the shutdown is activated ($V_i = V_{i\ nom}$).

Table 18: Shutdown conditions

Voltage V_{SD} on shutdown pin	Result
<0.7 V	Converter disabled (P_o approx. 1 W)
≥2.0 V or open	Converter enabled

© 2026 Bel Fuse Inc. BCD20020-G_AJ 4 March 2026
Downloaded from Arrow.com.

Sys-OK: Status

This function allows in a battery charger application for checking, whether the output is correctly following the external control signal at the R-input (coming for instance from the temperature sensor). The logic is shown in table 19.

Table 19: System OK (M1 with external battery sensor)

System Status	Input	$V_{control}$ sensor signal	V_{Bat} theoretical	V_{Bat} measured	Sys-OK Output
System OK	OK	2.7 V	27 V	27 V	Low ohmic
Battery overcharged / temp. sensor defect / control voltage to high	OK	2.7 V	27 V	28 V	High ohmic
Overload, converter cannot follow the control signal	OK	2.7 V	27 V	24 V	High ohmic
Output does not follow control signal, since battery would be overcharged	OK	3.0 V	30 V	27 V	High ohmic
System OK	OK	2.5 V	25 V	25 V	Low ohmic

R: Adjustment of V_o or V_{o2}

The R input allows external adjustment of the output voltage in the range of 50% to 110% $V_{o\,nom}$. Double-output models allow only adjustment of output 2 (connected to the terminals 6, 7, 8 and 9). This enables asymmetric output voltage configuration.

Adjustment can be achieved via a resistor or an external voltage source (in the range of 1.25 – 2.75 V).

Note: If the R input is not connected: V_o or $V_{o2} \approx V_{o\,nom}$.

a) Adjustment by an external resistor:

Resistor R_{ext1}, connected between R (pin 2) and GND1 (pin 1) of the D-SUB connector or according to fig. 20.

$$V_o = 50 - 100\%\ V_{o\,nom}.\quad R_{ext1} \approx 4\ \text{k}\Omega \bullet \frac{V_o}{V_{o\,nom} - V_o}$$

Resistor R_{ext2}, connected between R (pin 2) and VCC (pin 3) of the D-SUB connector or according to fig. 20.

$$V_o = 100 - 110\%\ V_{o\,nom}.\ R_{ext2} \approx 4\,\text{k}\Omega \bullet \frac{V_o - 2.5\ \text{V}}{2.5\,\text{V} \bullet (V_o / V_{o\,nom} - 1)}$$

Note: If the R function is not included in M1 or M2, refer to figure 20 how to connect R_{ext1} or R_{ext2} .

b) Adjustment by an external control voltage V_{ext} (1.25 – 2.75 V), connected between R (pin 2) and GND (pin 1) of the D-SUB connector or according to fig. 20.

$$V_{ext} \approx 2.5\ \text{V} \bullet \frac{V_o}{V_{o\,nom}} \qquad V_o \approx V_{o\,nom} \bullet \frac{V_{ext}}{2.5\,\text{V}}$$

Caution: To prevent damage, V_{ext} should not exceed 3 V, nor be negative.

Note: If longer wires are used to connect the R input at the D-SUB connector, the wiring to pin 1 (GND1) should be done as star point connection. If wired differently, the output voltage setting may be adversely affected.

In battery charging systems, an external battery temperature sensor (see *Accessories*) can be connected to optimize V_o. However, adjustment using the R input (pin 2 of D-SUB) is possible as well. The above shown formulas are valid, but $V_{o\,nom}$ stands for the voltage with open R input (= $V_{o\,safe}$).

F: Built-in Second Fuse

A built-in second fuse in the neutral line provides safe phase-to-phase connection at low mains voltages (e.g., USA 120 V/208 V / 60 Hz systems).

The built-in second fuse also enables safe connection to the mains, where phase and neutral are not defined or cannot be identified, as e.g., in the case of plug and socket connection to the mains via German Schuko-plugs; see also *Safety and Installation Instructions*.

Option F limits the DC input voltage to ≤ 250 V.

Q: Reverse Polarity Protection

EW models have no bridge rectifier at the input. To provide reverse polarity protection, an additional diode can be fitted. However this lowers the efficiency by approximately 1%.

© 2026 Bel Fuse Inc. BCD20020-G_AJ 4 March 2026
Downloaded from Arrow.com.

K2: System Connectors

For installation in systems using pre-assembled harnesses the converters are available with system connectors. They are UL-listed, approved for currents up to 15 A at –40 to 105 °C.

The mating system connectors with screw terminals and retainers are delivered together with every converter with option K2. Use max. 2.5 mm^2 (AWG 12) solid or stranded wires, or max. 1.5 mm^2 (AWG 14) stranded wires with crimp termination, stripped length 6 mm. Tightening torque of input/output terminals: max. 0.79 Nm (7 lbs.in.).

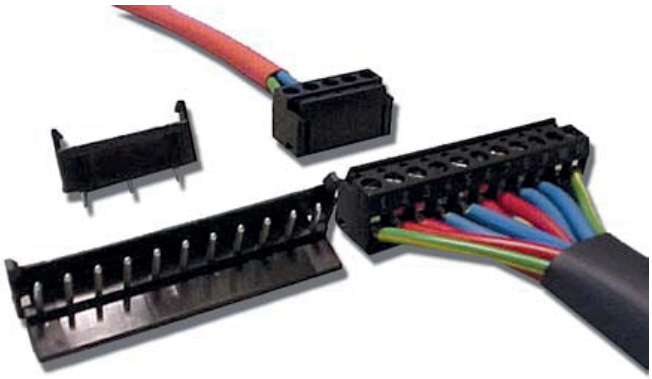

Fig. 22
System connectors Option K2

G: RoHS

RoHS compliant for all six substances.

© 2026 Bel Fuse Inc. BCD20020-G_AJ 4 March 2026
Downloaded from Arrow.com.

W Series

125, 250 Watt AC-DC & DC-DC DIN-Rail Converters

Accessories

Shock-Resistant Wall Mounting

Set of wall mounting brackets HZZ00618-G (UMB-W)

Content: 2 clamps, 4 countersunk screws M4, washers, and spring washers

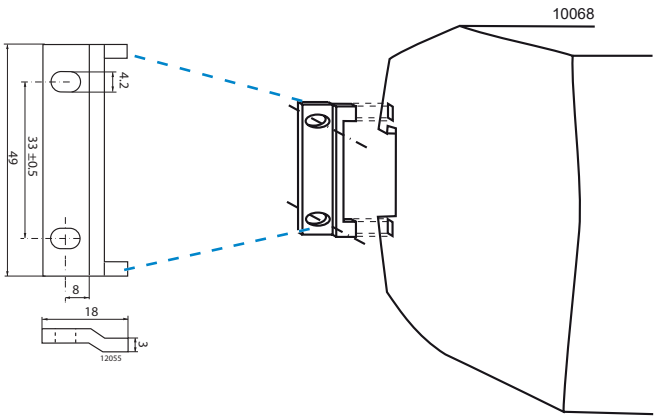

Fig. 23
Wall mounting with mounting brackets HZZ00618-G

DIN-Rail Fixing Brackets HZZ00624-G

For DIN-Rail vibration-proof fastening, use a set of brackets HZZ00624-G (DMB-EWG). For heavy-duty application 2 sets (= 4 brackets) are preferable.

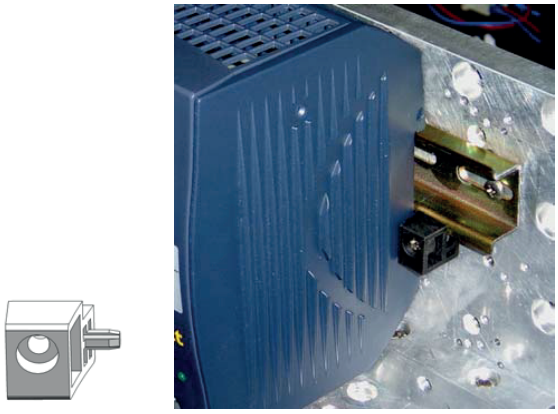

Fig. 24
DIN-rail fixing bracket HZZ00624-G (DMB-EWG)

Protective Covers over Terminals

Protective covers are available to avoid touching of the terminals. HZZ01219-G and HZZ01219A-G (protective cover with cut-outs) contains in a bag a plastic cover with length A = 26.5 mm for the primary terminals and a second one with length A = 59 mm for the secondary terminals; see figures below.

Content: 2 covers to protect the input and output terminals.

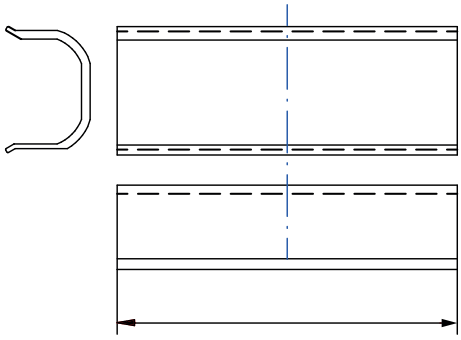

Fig. 25a
Protective cover HZZ01219-G

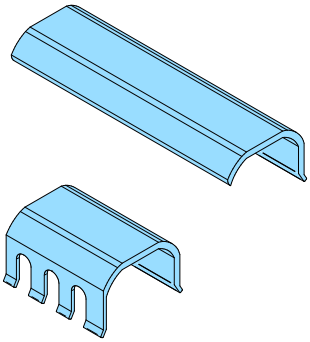

Fig. 25b
Protective cover with cut-outs HZZ01219A-G

© 2026 Bel Fuse Inc. BCD20020-G_AJ 4 March 2026

Downloaded from Arrow.com.

W Series

125, 250 Watt AC-DC & DC-DC DIN-Rail Converters

Battery Temperature Sensor

To charge lead-acid batteries according to their temperature different types of temperature sensors are available, (see *Battery Charging and Temperature Sensor* in this data sheet and the *Temperature Sensor data sheet* at **belfuse.com/power-solutions.**

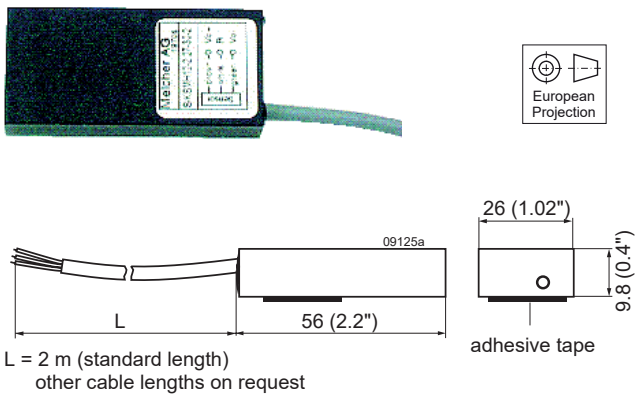

Fig. 26
Temperature sensor

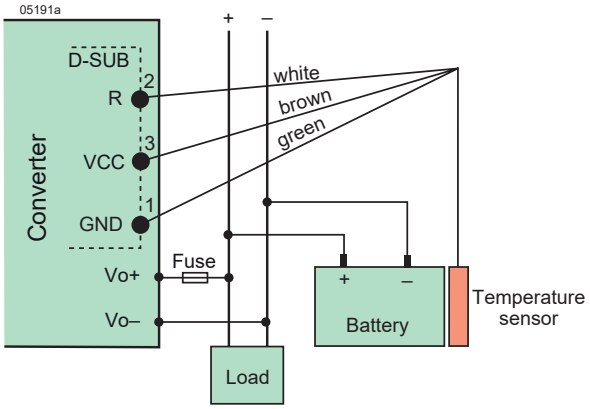

Fig. 27
Connection of temperature sensor

Table 20: Sensors for converters with standard R-input

Battery voltage nom. [V]	Sensor type	Cell volt-age [V]	Cell temp. coefficient [mV/K]	Cable length [m]
12	S-KSMH12-2.27-30-2	2.27	–3.0	2
12	S-KSMH12-2.27-35-2	2.27	–3.5	2
24	S-KSMH24-2.27-30-2	2.27	–3.0	2
24	S-KSMH24-2.27-35-2	2.27	–3.5	2
24	S-KSMH24-2.31-35-0	2.31	–3.5	4.5
24	S-KSMH24-2.31-35-2	2.31	–3.5	2
24	S-KSMH24-2.35-35-2	2.35	–3.5	2
48	S-KSMH48-2.27-30-2	2.27	–3.0	2
48	S-KSMH48-2-27-35-2	2.27	–3.5	2

For additional accessory product information, see the accessory data sheets listed with each product series or individual model at our website.

NUCLEAR AND MEDICAL APPLICATIONS - These products are not designed or intended for use as critical components in life support systems, equipment used in hazardous environments, or nuclear control systems.

TECHNICAL REVISIONS - The appearance of products, including safety agency certifications pictured on labels, may change depending on the date manufactured. Specifications are subject to change without notice.

POWER | PROTECT | CONNECT

Asia-Pacific +86 755 298 85888
EMEA +353 61 531 820
North America +1 866 513 2839

powersupport@belf.com
belfuse.com

© 2026 Bel Fuse Inc. BCD20020-G_AJ 4 March 2026

Downloaded from Arrow.com.