Downloaded from Arrow.com.

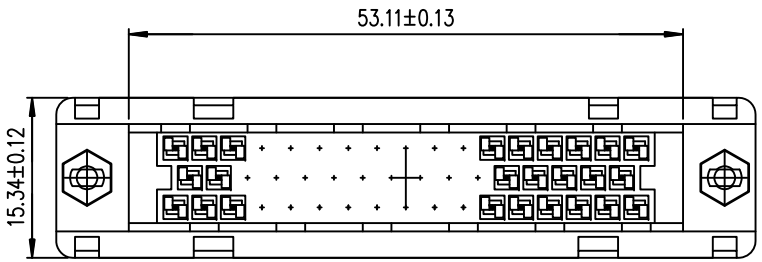

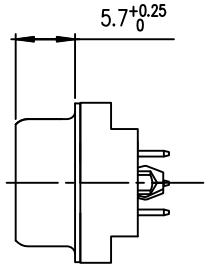

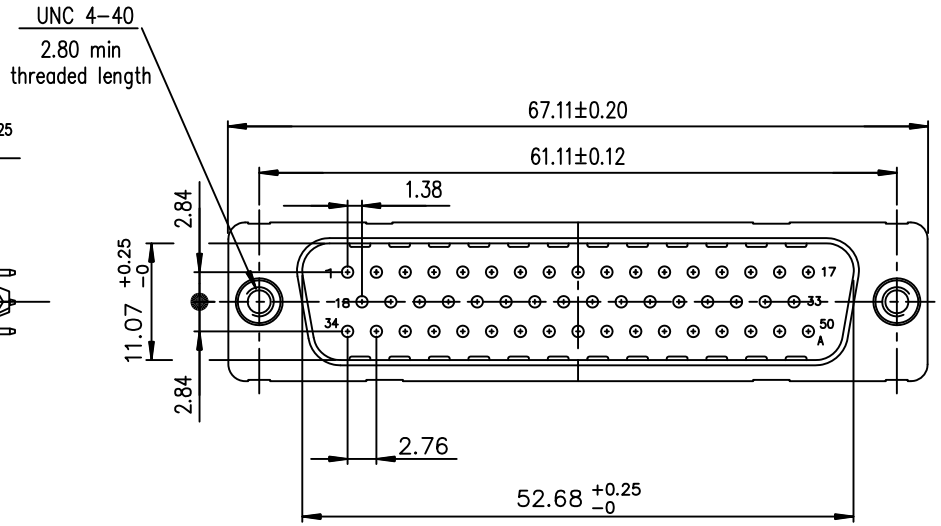

PC board drilling dimensions
(after plating – thickness: 1.60 to 3.20 mm)

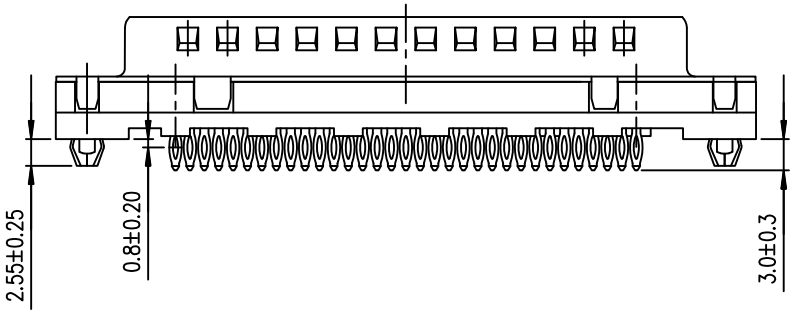

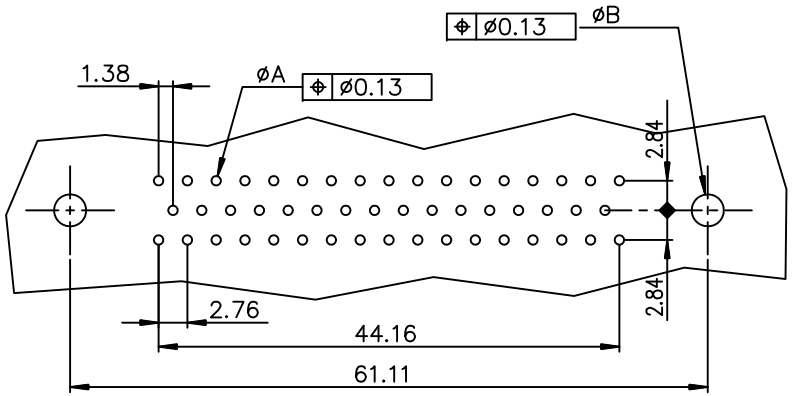

ROHS PART NUMBER

PART NUMBER	
Flash Gold	D50P91C4GX00LF
0.76µ Gold	D50P91C6GX00LF

GENERAL CHARACTERISTICS AND ROHS INFORMATIONS:
SEE DRAWING C01-8646-0001

ltr	ecn no	dr	date
F	ELX-I-21654	AB	2015-10-26
G	ELX-I-24020	AAB	2016-06-06

dr	PESSON	1995-10-03
engr	MITHUN PAUL	2016-06-06
chr	ATHUL A.B	2016-06-06
appd	BIJU K PAUL	2016-06-06

mat'l. code
surface ISO 1302
tolerance ISO 406 ISO 1101
tolerances unless otherwise specified
angles 0°±2°
linear .0±0.1 .00±0.1 .000±0.1
projection
mm
scale 2:1
product family D-SUB
title MALE DELTA-D 50 STRAIGHT PRESS-FIT
dwg no C01-8646-0378
sheet 1 of 1
size A3
type Product Customer Drawing
sheet index
revision G
sheet 1

form: A3-2016-02-24

© 2016 AFCI