We connect and protect

Plug-In Unit Kit With Extraction Handle Type 1, Unshielded, Grey, 3 U, 8 HP

CATALOG NUMBER

20817-447

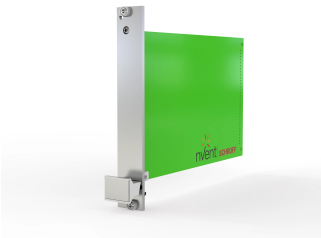

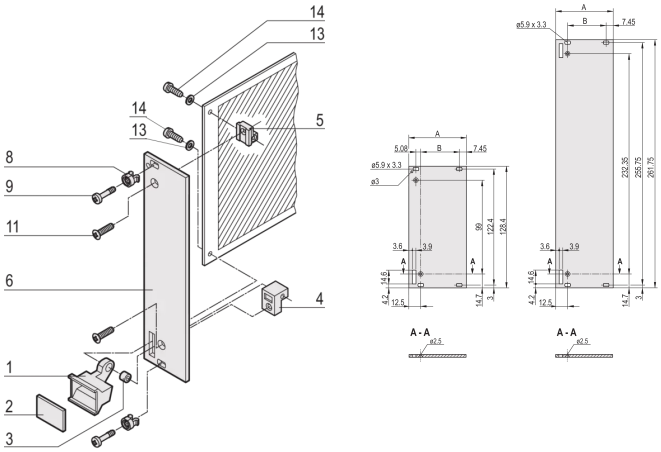

Plug-in unit, with extraction handle type 1 and flat panel. The grey handle is assembled on the front panel.

CERTIFICATIONS

RoHS COMPLIANT

FEATURES

Front panel, flat, unshielded

Handle with extraction function

Downloaded from Arrow.com.

PRODUCT ATTRIBUTES

Rack Height: 3U
Rack Width: 8HP
Package Quantity: 1
Handle Type: Trapezoid, Type 1
Mounting: Screw-on Front
Front Finish: Anodized
Rear Finish: Passivated
Treated Edges: No
Flammability Rating: UL® 94V-0
Complies With: EN 45545-2, R22-R24, HL3; IEC 60297-3-101; IEEE 1101.1/11
EMC Shielding: No
Finish: Anodized; Passivated
Material: Aluminum
Product Type: Front Panel
Type: Front Panel with Handle (PIU)

DIAGRAMS

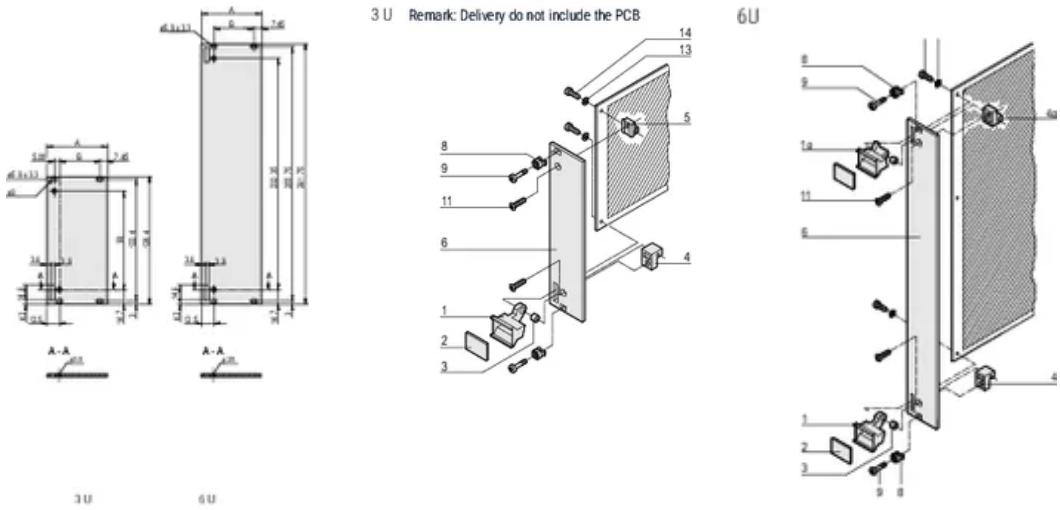

WARNING

nVent products shall be installed and used only as indicated in nVent's product instruction sheets and training materials. Instruction sheets are available at www.nvent.com and from your nVent customer service representative. Improper installation, misuse, misapplication or other failure to completely follow nVent's instructions and warnings may cause product malfunction, property damage, serious bodily injury and death and/or void your warranty.

Downloaded from Arrow.com.

North America
All locations
+1.763.422.2661
Chat with us:
nvent.com/schroff

Europe
Straubenhardt, Germany
+49.7082.794.0
Betschdorf, France
+33.3.88.90.64.90
Warsaw, Poland
+48.22.209.98.35
Assago, Italy
+39.02.932.7141
Chat with us:
nvent.com/schroff

Asia
Shanghai, China
+86.21.2412.6943
Qingdao, China
+86.532.8771.6101
Singapore
+65.6768.5800
Shin-Yokohama, Japan
+81.45.476.0271
Chat with us:
nvent.com/schroff

Middle East & India
Dubai, United Arab Emirates
+971.4.378.1700
Bangalore, India
+91.80.6715.2001
Istanbul, Turkey
+90.216.250.7374
Chat with us:
nvent.com/schroff

Our powerful portfolio of brands:

CADDY ERICO HOFFMAN ILSCO SCHROFF TRACHTE

©2026 nVent. All nVent marks and logos are owned or licensed by nVent Services GmbH or its affiliates. All other trademarks are the property of their respective owners. nVent reserves the right to change specifications without notice.

This document is system-generated.

Downloaded from Arrow.com.