© 2021 TE Connectivity. All Rights Reserved.

REVISIONS					
P	LTR	DESCRIPTION	DATE	DWN	APVD
	A1	ECN-23-221783 LABEL POSITION CORRECTED	18JUL2023	KS	RB

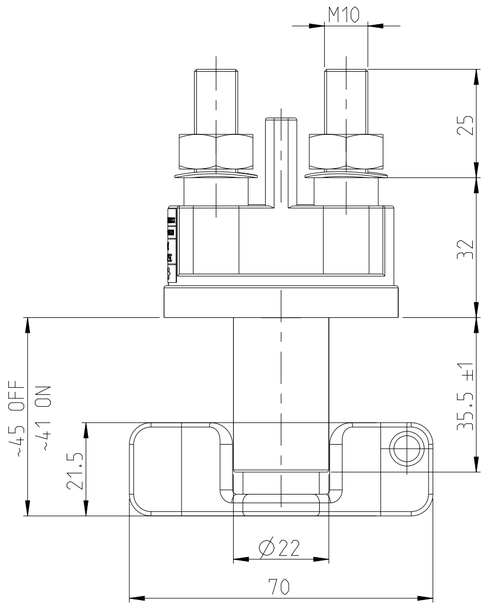

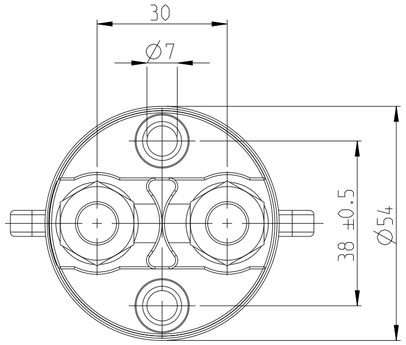

NOTES
Bemerkungen

1 TE-CONNECTIVITY ORDER-NUMBER
TE-Connectivity Bestellnummer

2 DO NOT SWITCH UNDER LOAD!
Nicht unter Last schalten!

Technische Daten

Allgemeine Daten
Umgebungstemperatur ..... -40°C bis +85°C
Schutzart ..... IP 67 / IEC 529
Vibration ..... 4G / 50-2000 Hz
Schock ..... 6G / 11ms

Elektrische Daten
Min. Isolationswiderstand ..... 100 MOhm
Hochspannungsfestigkeit ..... 1050V - 1 min.
Max. Kontaktspannungsabfall bei Nennlast.. 150 mV
Dauerstrom ..... 200 A
Ueberlast ..... 500 A - 180 sec.
..... 1000A - 30 sec.
..... 2500A - 5 sec.

Lebensdauer und Schaltvermoegen
Mechanisch ..... 20000 Schaltspiele
Nennlast 250 A ..... 10000 Schaltspiele
Ueberlast 200 A ..... 10 Schaltspiele

Sonstige Angaben
Gehaeusewerkstoff ..... PA GF schwarz
Schalthebelwerkstoff ..... PA GF rot
Anschlussquerschnitt bei Nennlast ..... min. 70 mm²
Schalthebel ..... nicht abziehbar
Max. Anzugsmoment (Hauptkontakte) ..... 15 - 20 Nm

TECHNICAL DATA

ENVIRONMENTAL CHARACTERISTICS
TEMPERATURE RANGE ..... -40°C TO +85°C
SEALING ..... IP 67 / IEC 529
VIBRATION ..... 4G / 50-2000 Hz
SHOCK G-LEVEL ..... 6G / 11ms

ELECTRICAL CHARACTERISTICS
MIN INSULATION RESISTANCE ..... 100 MOHM
DIELECTRIC WITHSTANDING VOLTAGE ..... 1050V - 1 min.
MAX. CONTACT VOLTAGE DROP DURING NOMINAL LOAD .... 150 mV
DUTY RATING ..... 200 A
OVERLOAD ..... 500 A - 180 sec.
..... 1000A - 30 sec.
..... 2500A - 5 sec.

OPERATING LIFE CHARACTERISTICS
MECHANICAL LIFE ..... 20000 CYCLES
NOMINAL LOAD 250 A ..... 10000 CYCLES
OVERLOAD 2000 A ..... 10 CYCLES

GENERAL CHARACTERISTICS
CASE MATERIAL ..... PA GF BLACK
SWITCH LEVER MATERIAL ..... PA GF RED
WIRE SECTION (AT NOMINAL LOAD) ..... MIN. 70 MM²
SWITCH LEVER ..... NOT REMOVEABLE
MAX TORQUE (MAIN CONTACTS) ..... 15 - 20 Nm

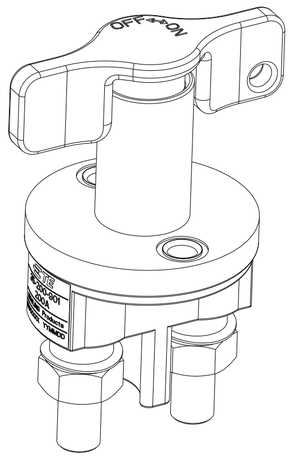

CIRCUIT
Schaltbild

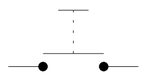

TE ORDER-NO.	REV.	DESCRIPTION	WEIGHT [g]	ITEM NO
K1060710 1	A	BATTERY DISCONNECTOR 200A Batterietrennschalter 200A	200	1

THIS DRAWING IS A CONTROLLED DOCUMENT.

DIMENSIONS: mm

TOLERANCES UNLESS OTHERWISE SPECIFIED: DIN ISO 2768mK cL
0 PLC ±
1 PLC ±
2 PLC ±
3 PLC ±
4 PLC ±
ANGLES ±

MATERIAL
FINISH

DWN 11OCT2002 U.Grindemann
CHK 07SEP2020 E.Hamarat
APVD 07SEP2020 U.Grindemann
PRODUCT SPEC
APPLICATION SPEC
WEIGHT

TE Connectivity

NAME
BATTERY DISCONNECTOR 200A
Batterietrennschalter 200A

SIZE	CAGE CODE	DRAWING NO	RESTRICTED TO
A2	00779	C-35-200-901	-

CUSTOMER DRAWING
SCALE 1:1 SHEET 1 OF 1 REV A1

Downloaded from Arrow.com.