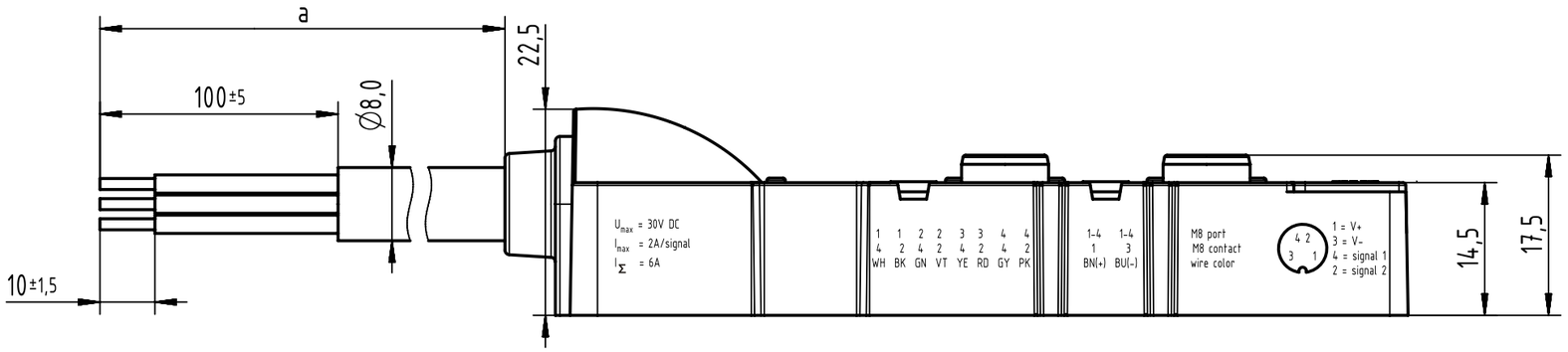

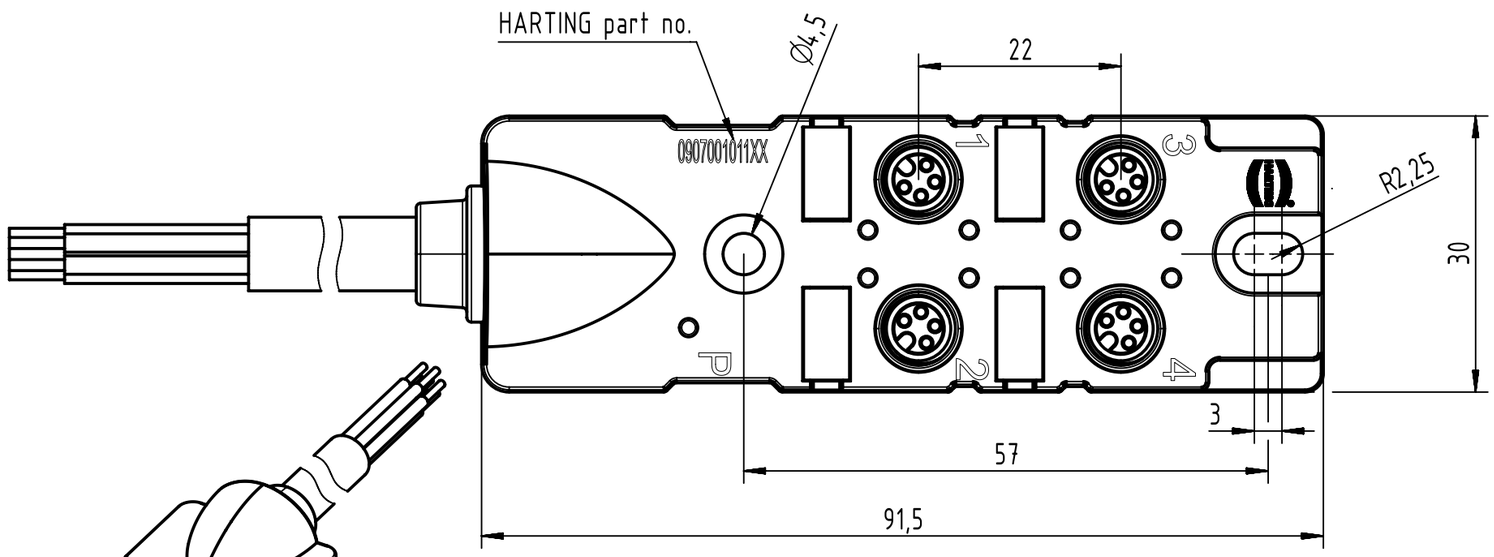

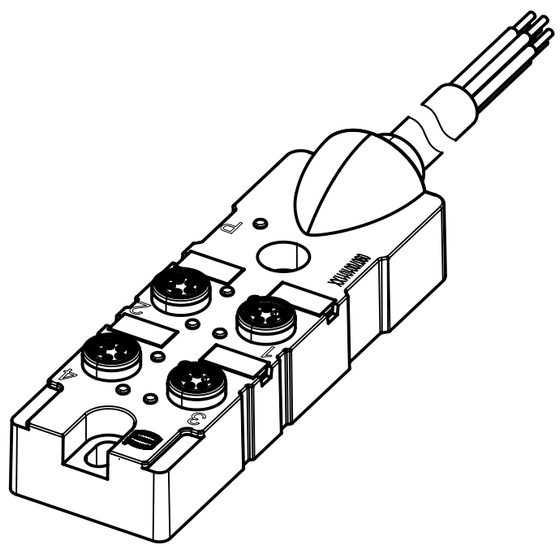

Loading plan

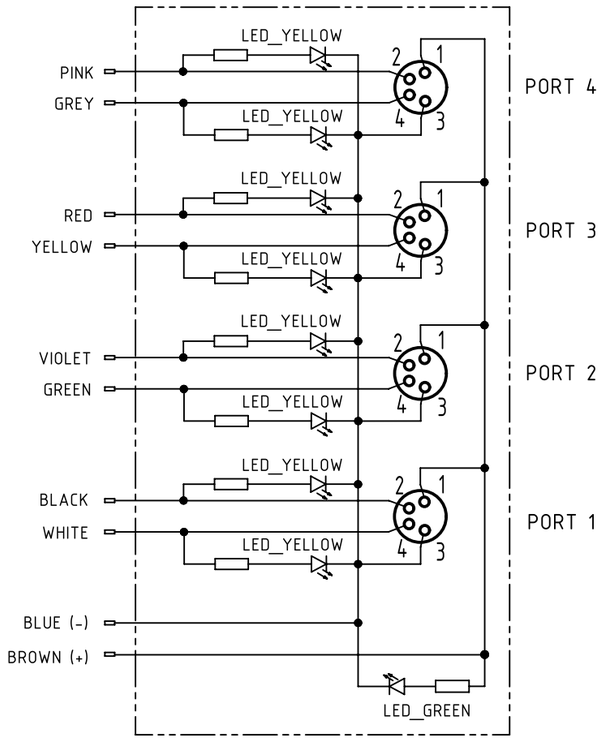

- Protection level: IP67
- Temperature range: -25°C ... +85°C

Electrical data:
-Rated voltage: 15-30V DC
-Nominal: 2 A per Contact
-Current: 6 A max total

Cont. no	HARTING part no.	Type of cable	Dim. a[m]
6	090700101150	PVC, 2xAWG20 + 8xAWG24, black	10
5	090700101151		5
4	090700101153		2
3	090700101100	PUR, 2xAWG20 + 8xAWG24, black	10
2	090700101101		5
1	090700101103		2

All Dimensions in mm | Tech. Character. | Free size tol. | According to production drawing

All rights reserved

Department HCS - RO

HARTING Customised Solutions
D-32339 Espelkamp

Created by	Inspected by	Standardisation	Date	State
STOCHECIC Stocheci	COSTEA Costea	MUNTEANV Munteanu	2020-06-16	Final Release

Title: har-SAB M8/4/4p PAC

Doc-Key / ECM-Nr.: 100689718/UGD/000/F 500000174539

Type: TB | Number: 0907001011XX | Rev.: F | Page: 1/1

A3

Downloaded from Arrow.com.