# 750W AC/DC High Reliable Multi-Industries Encolsed Type Power Supply NSP-750 series

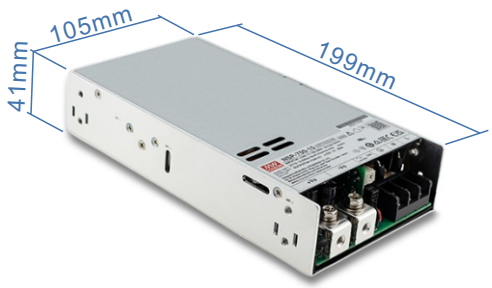


User's Manual
Click Me

IEC62368-1
IEC61558-1/-2-16
IEC61010-1/-2-201
IEC60601-1
IEC60335-1
IEC62477-1

BS EN/EN62368-1
BS EN/EN61558-1/-2-16
BS EN/EN61010-1/-2-201
BS EN/EN60601-1
BS EN/EN60335-1
BS EN/EN62477-1

UL62368-1
UL61010-1/-2-201
ANSI/AAMI ES60601-1

LISTED
UL61010-1

(Note.5) GB4943.1 CNS15598-1 KC62368-1 (By request) IS 13252 (By request Note.7) TPTC004

ECO Automate Industrial Security Network
Telecom Household Medical 2xMOPP BF rated

## Features

- 85~305Vac input with PFC(277Vac available)
- No load power consumption <0.75W~1W by R.C.
- Global certificates in multi-fields (ITE 62368-1, Medical 60601-1,Household 60335-1, Industrial 61558-1/2-16/61010-1, Energy converter 62477-1)
- 200% peak power capability(12~60V models)
- High efficiency up to 95%
- -40~+85℃ wide range operation temperature(> +60℃ derating)
- Extremely low leakage current<350μA, 2 x MOPP, suitable for BF medical applications
- Built-in constant current limiting circuit
- Protections: Short circuit / Overload / Over voltage / Over temperature
- Forced air cooling by built-in DC fan with noise <45dB and fan ON/OFF control
- Built-in Remote ON/OFF control/Remote Sense/ DC OK signal
- Over voltage category Ⅲ (OVC Ⅲ)
- Operating altitude up to 5000 meters
- Conformal coating
- 5 years warranty

## Applications

- Industrial automation machinery/ control system
- Security system
- Mechanical and electrical equipment
- Electronic instruments, equipments orapparatus
- Network equipment
- Telecom devices
- Power sourcing equipment of PoE
- Home automation
- Medical devices
- Charging application

## GTIN CODE

MW Search: https://www.meanwell.com/serviceGTIN.aspx

## Description

The NSP-750 series is a 750W AC/DC power supply with PFC function, designed for high reliability and suitable for multiple industries. Key features include: compact size (199*105*41 mm) for better space utilization in system installations, ultra-wide input range of 85~305Vac for global compatibility, up to 95% efficiency and low standby power consumption (<0.75W~1W by models) for energy-saving and carbon reduction, constant current design with 200% peak power capability, wide operating temperature range from -40 to +85°C (+60°C at full load), compliance with OVCIII, built-in Remote Control/Remote Sense/DC OK signal, internal PCB coating, complete protections, certifications for multiple safety standards including 62368-1, 60601-1, 61558-1, 60335-1, 62477-1, and 61010-1, as well as 2 X MOPP compliance and extremely low leakage current (<350μA). It is suitable for BF-rated medical equipment and comes with a 5-years warranty, making it a highly cost-effective solution for industrial power supply needs.

## Model Encoding

**NSP -750- 24**

- 24 — Output voltage (5V/12V/15V/24V/27V/36V/48V/60V)
- 750 — Output wattage
- NSP — Series name



Downloaded from Arrow.com.

MEAN WELL

# 750W AC/DC High Reliable Multi-Industries Encolsed Type Power Supply **NSP-750 series**

| SPECIFICATION | | NSP-750-5 | NSP-750-12 | NSP-750-15 | NSP-750-24 | NSP-750-27 | NSP-750-36 | NSP-750-48 | NSP-750-60 |
|---|---|---|---|---|---|---|---|---|---|
| **OUTPUT** | | | | | | | | | |
| **DC VOLTAGE** | | **5V** | **12V** | **15V** | **24V** | **27V** | **36V** | **48V** | **60V** |
| **RATED CURRENT** | | 100A | 62.5A | 50A | 31.3A | 27.8A | 20.9A | 15.7A | 12.6A |
| **CURRENT RANGE** | | 0 ~ 100A | 0 ~ 62.5A | 0 ~ 50A | 0 ~ 31.3A | 0 ~ 27.8A | 0 ~ 20.9A | 0 ~ 15.7A | 0 ~ 12.6A |
| **RATED POWER** | | 500W | 750W | 750W | 751.2W | 750.6W | 752.4W | 753.6W | 756W |
| **PEAK** | **CURRENT(5 sec.)** | N/A | 125A | 100A | 62.5A | 55.6A | 41.7A | 31.3A | 25A |
| | **POWER(5 sec.)** | N/A | 1500W | 1500W | 1500W | 1500W | 1500W | 1500W | 1500W |
| **RIPPLE & NOISE (max.)** | **Note.2** | 200mVp-p | 200mVp-p | 200mVp-p | 240mVp-p | 240mVp-p | 240mVp-p | 240mVp-p | 300mVp-p |
| **VOLTAGE ADJ. RANGE** | | 4.7 ~ 5.5V | 10.8 ~ 14V | 15 ~ 19V | 21 ~ 26V | 26 ~ 32V | 32 ~ 43V | 44 ~ 57V | 54 ~ 72V |
| **VOLTAGE TOLERANCE** | **Note.3** | ±2.0% | ±2.0% | ±2.0% | ±1.0% | ±1.0% | ±1.0% | ±1.0% | ±1.0% |
| **LINE REGULATION** | | ±0.5% | ±0.5% | ±0.5% | ±0.5% | ±0.5% | ±0.5% | ±0.5% | ±0.5% |
| **LOAD REGULATION** | | ±1.0% | ±0.5% | ±0.5% | ±0.5% | ±0.5% | ±0.5% | ±0.5% | ±0.5% |
| **SETUP, RISE TIME** | | 1500ms, 80ms/115Vac 1000ms, 80ms/230Vac 900ms, 80ms/277Vac | | | | | | | |
| **HOLD UP TIME (Typ.)** | | 16ms at full load | | | | | | | |
| **INPUT** | | | | | | | | | |
| **VOLTAGE RANGE** | **Note.4** | 85 ~ 305Vac 120 ~ 431Vdc | | | | | | | |
| **NO LOAD POWER CONSUMPTION(Typ.)** | **Remote Power OFF** | 0.75W/115Vac 0.75W/230Vac 1W/277Vac | | | | | | | |
| | **Remote Power ON** | 5W/115Vac 5W/230Vac 5W/277Vac | | | | | | | |
| **FREQUENCY RANGE** | | 47 ~ 63Hz | | | | | | | |
| **POWER FACTOR (Typ.)** | | PF>0.98/115Vac PF>0.93/230Vac PF>0.9/277Vac at full load | | | | | | | |
| **EFFICIENCY (Typ.)** | | 90% | 92% | 92% | 94% | 94% | 95% | 95% | 95% |
| **AC CURRENT (Typ.)** | | 8.2A/115Vac 3.9A/230Vac 3.2A/277Vac | | | | | | | |
| **INRUSH CURRENT (Typ.)** | | COLD START 20A/115Vac 40A/230Vac 50A/277Vac | | | | | | | |
| **LEAKAGE CURRENT** | | Earth leakage current <350μA(rms)@277Vac, touch current<100μA(rms) @ 277Vac | | | | | | | |
| **PROTECTION** | | | | | | | | | |
| **SHORT CIRCUIT** | | 5V | Constant current limiting for more than 5 seconds (Vout<30%) and then hiccup mode, recovers automatically after faul condition is removed | | | | | | |
| | | 12V ~ 60V | Constant current limiting for more than 5 seconds (Vout<30%) and then shut down o/p voltage, AC re-power on to recover or Hiccup mode, recovery automatically after fault conditon is removed. Depends on the user's wire impedance | | | | | | |
| **OVERLOAD** | | 5V | 105%~150% rated output power; More than 5 seconds and then hiccup mode,recovers automatically after fault condition is removed | | | | | | |
| | | 12V ~ 60V | Normally works within 105 ~ 200% rated output power for more than 5 seconds and then constant current limiting without shutdown(Vout>30%), recovers automatically after fault condition is removed, or shut down o/p voltage when Vout<30%,AC re-power on to recover | | | | | | |
| | | | >200% rated power, constant current limiting (Vout>30%)with auto-recovery after fault condition is removed, or shut down o/p voltage when Vout<30%,AC re-power on to recover | | | | | | |
| **OVER VOLTAGE** | | 5.8 ~ 7.5V | 15 ~ 19V | 20 ~ 25V | 28 ~ 36V | 33~ 42V | 44 ~ 54V | 58~ 70V | 73~ 86V |
| | | Protection type : Shut down o/p voltage, AC re-power on to recover | | | | | | | |
| **OVER TEMPERATURE** | | Shut down o/p voltage, recovers automatically after temperature goes down | | | | | | | |
| **FUNCTION** | | | | | | | | | |
| **AUXILIARY POWER** | | 5Vaux @ 0.2A Tolerance -15% ~ +15% at main output 20% rated current<br>12Vaux @ 0.8A Tolerance -15% ~ +15% at main output 20% rated current | | | | | | | |
| **REMOTE CONTROL** | | POWER ON : short between RC+(pin11)&5V-AUX(pin13) on CN1 | | | | | | | |
| | | POWER OFF: open between RC+(pin11)&5V-AUX(pin13) on CN1 | | | | | | | |
| **REMOTE SENSE** | | Compensate voltage drop on the load wiring up to 0.3V. Please refer to the Function Manual | | | | | | | |
| **DC OK SIGNAL** | | By phototransistor contact rating(max.):15Vdc/10mA resistive load. Please refer to the Function Manual. | | | | | | | |
| **FAN NOISE(Typ.)** | | Fan ON/OFF control, RTH3≥50℃ ±10℃ FAN ON ; RTH3≤40℃ ±10℃ FAN OFF | | | | | | | |
| | | 45dB | | | | | | | |
| **ENVIRONMENT** | | | | | | | | | |
| **WORKING TEMP.** | | -40 ~ +85℃ (Refer to "Derating Curve") | | | | | | | |
| **WORKING HUMIDITY** | | 20 ~ 90% RH non-condensing | | | | | | | |
| **STORAGE TEMP., HUMIDITY** | | -40 ~ +85℃, 10 ~ 95% RH non-condensing | | | | | | | |
| **TEMP. COEFFICIENT** | | ±0.05%/℃ (0 ~ 60℃) | | | | | | | |



Downloaded from Arrow.com.

| SPECIFICATION | NSP-750-5 | NSP-750-12 | NSP-750-15 | NSP-750-24 | NSP-750-27 | NSP-750-36 | NSP-750-48 | NSP-750-60 |
|---|---|---|---|---|---|---|---|---|
| **VIBRATION** | 10 ~ 500Hz, 2G 10min./1cycle, 60min. each along X, Y, Z axes | | | | | | | |
| **SAFETY & EMC** (Note.5&6&7) | | | | | | | | |
| **SAFETY STANDARDS** | CB IEC62368-1, IEC60335-1, IEC61558-1/-2-16, IEC61010-1/-2-201, IEC60601-1; IEC62477-1<br>DEKRA BS EN/EN62368-1, BS EN/EN60335-1, BS EN/EN61558-1/-2-16, BS EN/EN61010-1/-2-201, BS EN/EN60601-1(3.2 Version);BS EN/EN62477-1<br>UL UL62368-1, ANSI/AAMI ES60601-1(3.2 Version),UL61010-1/-2-201<br>CCC GB4943.1<br>BSMI CNS15598-1<br>EAC TP TC 004<br>SEMI F47 approved;<br>KC/BIS KC62368-1 and BIS IS 13252(Part 1) certified, No stock ,contact sales by request | | | | | | | |
| **ISOLATION LEVEL** Note.8 | Primary-Secondary: 2xMOPP, Primary-Earth: 1xMOPP, Secondary-Earth: 1xMOPP | | | | | | | |
| **OVER VOLTAGE CATEGORY** Note.9 | IEC/EN 61558-1/-2-16 (OVC Ⅲ, altitude up to 2000M)<br>IEC/EN/UL 62368-1 (OVC Ⅱ, altitude up to 5000M)<br>IEC/EN 60335-1 (OVC Ⅱ, altitude up to 5000M)<br>IEC/EN/ANSI/AAMI ES60601-1 (OVC Ⅱ, altitude up to 4000M)<br>IEC/EN/UL 61010-1/-2-201 (OVC Ⅱ, altitude up to 5000M)<br>IEC/EN 62477-1 (OVC Ⅱ, altitude up to 5000M) | | | | | | | |
| **SAFETY EXTRA-LOW VOLTAGE(SELV)** | IEC/EN 61558-2-16 (SELV, 5 ~ 36V)<br>IEC/EN 60335-1 (SELV, 5 ~ 36V)<br>IEC/EN/UL 62368-1 (SELV/ES1, 5 ~ 36V) | | | | | | | |
| **WITHSTAND VOLTAGE** | I/P-O/P:4.2KVac I/P-FG:2.1KVac O/P-FG:1.5KVac | | | | | | | |
| **ISOLATION RESISTANCE** | I/P-O/P, I/P-FG, O/P-FG:100M Ohms / 500VDC / 25℃/ 70% RH | | | | | | | |

**EMC EMISSION**

| Parameter | Standard | Test Level / Note |
|---|---|---|
| Conducted | BS EN/EN55032(CISPR32),CNS 15936,GB/T 9254.1,KS C 9832 | Class B |
| | BS EN/EN55014-1(CISPR14-1) | |
| | BS EN/EN55011(CISPR11) | Class B |
| Radiated | BS EN/EN55032(CISPR32),CNS 15936,GB/T 9254.1,KS C 9832 | Class B |
| | BS EN/EN55014-1(CISPR14-1) | |
| | BS EN/EN55011(CISPR11) | Class B |
| Harmonic Current | BS EN/EN61000-3-2(IEC61000-3-2),GB 17625.1 | Class A |
| Voltage Flicker | BS EN/EN61000-3-3(IEC61000-3-3) | ----- |

**EMC IMMUNITY**

BS EN/EN55035(CISPR35),BS EN/EN61000-6-2(IEC61000-6-2),BS EN/EN60601-1-2(IEC60601-1-2), BS EN/EN55014-2(CISPR14-2),KS C 9835,SEMI F47 tested at 200Vac

| Parameter | Standard | Test Level / Note |
|---|---|---|
| ESD | BS EN/EN61000-4-2 | Level 4, 15KV air ; Level 4, 8KV contact |
| Radiated | BS EN/EN61000-4-3 | Level 3, 10V/m(80MHz~2.7GHz)<br>Table 9, 9~28V/m(385MHz~5.78GHz) |
| EFT / Burst | BS EN/EN61000-4-4 | Level 3, 2KV |
| Surge | BS EN/EN61000-4-5 | Level 4, 2KV/Line-Line 4KV/Line-Earth |
| Conducted | BS EN/EN61000-4-6 | Level 3, 10V |
| Magnetic Field | BS EN/EN61000-4-8 | Level 4, 30A/m |
| Voltage Dips and Interruptions | BS EN/EN61000-4-11 | >95% dip 0.5 periods, 30% dip 25 periods, >95% interruptions 250 periods |

| OTHERS | |
|---|---|
| **MTBF** | 1047.1 K hrs min. Telcordia SR-332 (Bellcore) ; 137.4K hrs min. MIL-HDBK-217F (25℃) |
| **DIMENSION (L*W*H)** | **199*105*41mm** |
| **PACKING** | 1.23Kg;9pcs/12.1Kg/0.63 CUFT |

**NOTE**

1. All parameters NOT specially mentioned are measured at 230Vac input, rated load and 25℃ of ambient temperature.
2. Ripple & noise are measured at 20MHz of bandwidth by using a 12" twisted pair-wire terminated with a 0.1uF & 47uF parallel capacitor.
3. Tolerance: includes set up tolerance, line regulation and load regulation.
4. Derating may be need under low input voltages. Please refer to "STATIC CHARACTERISTIC" sections for details.
5. The Regulatory Compliance Mark (RCM) is applied on a voluntary basis. The equipment meets the relevant IEC or AS/NZS standards, or AS/NZS 3820 where applicable. The use of the RCM mark complies with AS/NZS 4417.1.
6. The power supply is considered a component which will be installed into a final equipment. All the EMC tests are been executed by mounting the unit on a 360mm*360mm metal plate with 1mm of thickness. The final equipment must be re-confirmed that it still meets EMC directives. For guidance on how to perform these EMC tests, please refer to "EMI testing of component power supplies." (as available on https://www.meanwell.com//Upload/PDF/EMI_statement_en.pdf)
7. Some factory or model may not have the BIS logo, please contact your MEAN WELL sales for more information.
8. MOPP is suitable for 100-240Vac input only.
9. The ambient temperature derating of 3.5℃/1000m with fanless models and 5℃/1000m with fan models for operating altitude higher than 2000m(6500ft)..

※ Product Liability Disclaimer: For detailed information, please refer to https://www.meanwell.com/serviceDisclaimer.aspx



Downloaded from Arrow.com.

## ■ Block Diagram

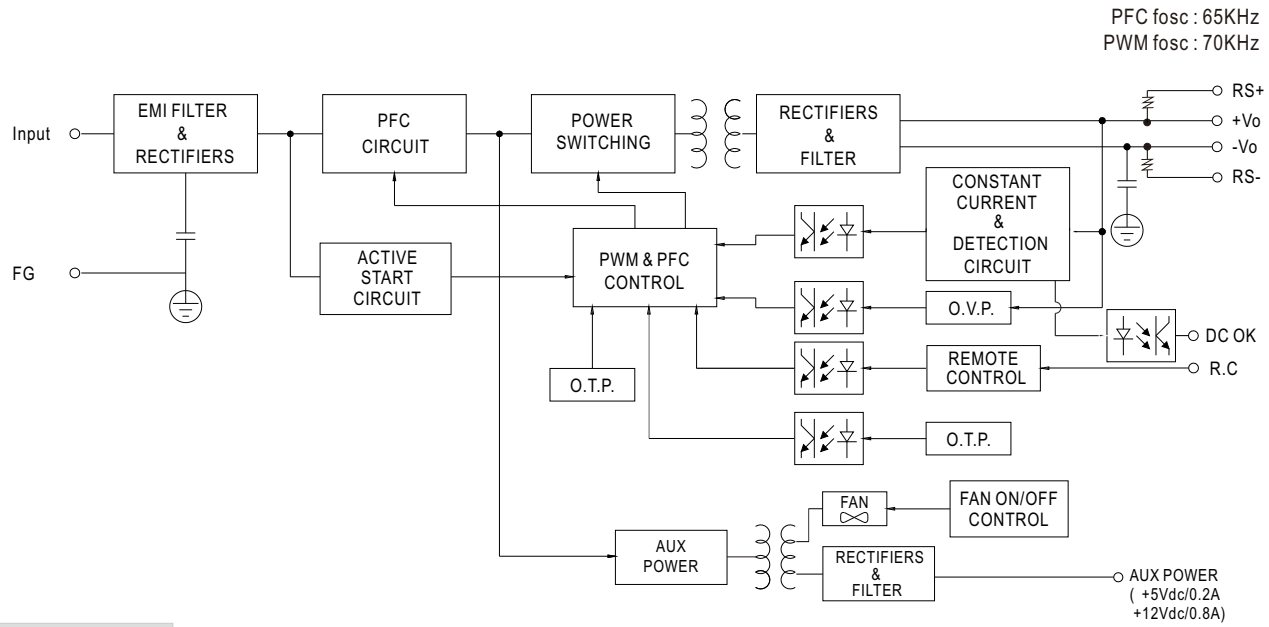


## ■ Derating Curve

Suitable for 100/110/115/120Vac System
(85~135Vac)

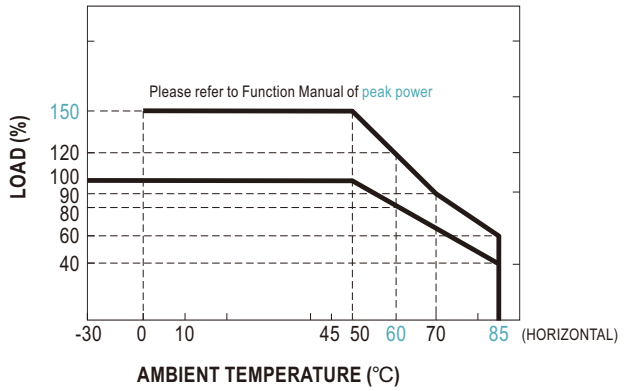


Note: Below 100Vac @-30℃ there may be a restart situation within 3 seconds after power-on

Suitable for 220/230/240/277Vac System
(180~305Vac)

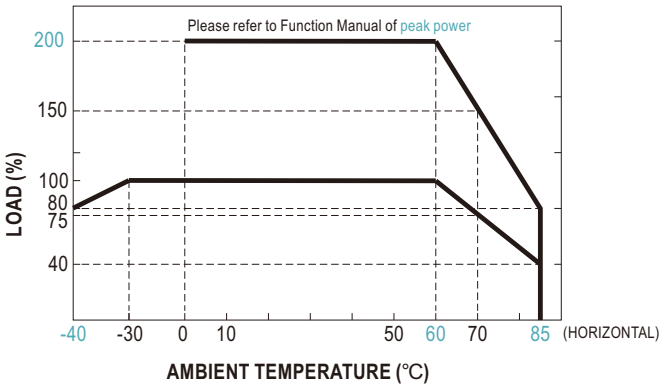


## ■ Output Derating vs Input Voltage

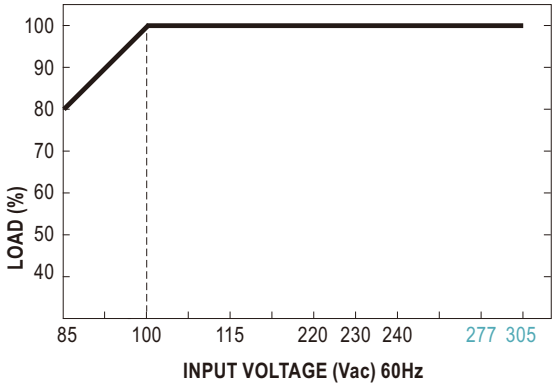




Downloaded from Arrow.com.

## ■ Funtion Manual

### 1. Peak Power

$$P_{av} = \frac{P_{pk} \times t + P_{npk} \times (T-t)}{T} \leqslant P_{rated}$$

$$Duty = \frac{t}{T} \times 100\% \leqslant 35\%$$

$t \leqslant 5$ sec

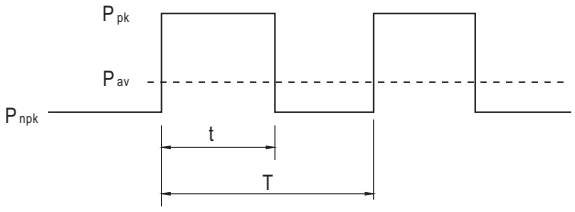


$P_{av}$ : Average output power (W)

$P_{pk}$ : Peak output power (W)

$P_{npk}$ : Non-peak output power (W)

$P_{rated}$ : Rated output power (W)

t : Peak power width (sec)

T : Period (sec)

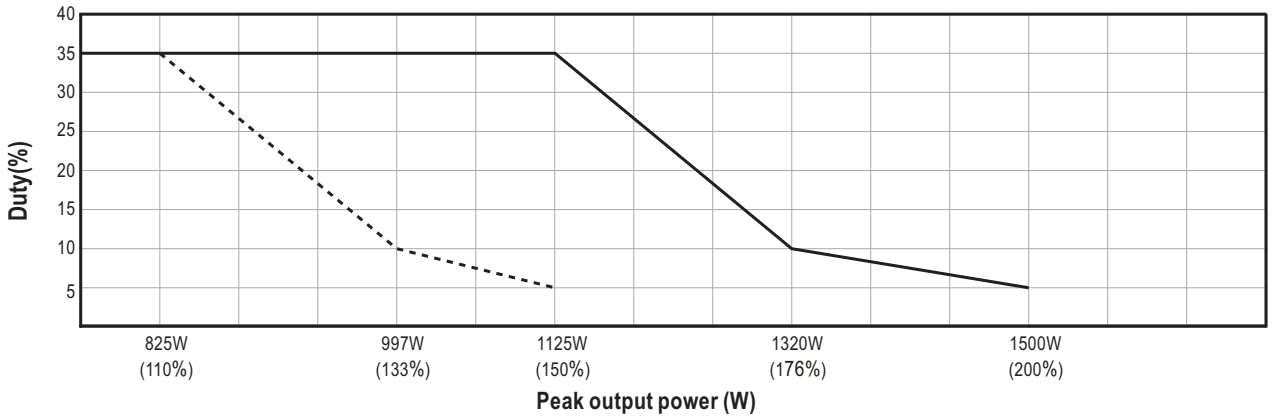


**For example (24V model) :**

Vin = 200Vac  Duty_max = 5%

$P_{av} = P_{rated} = 750W$

$P_{pk} = 1500W$

$t \leqslant 5$ sec

$$T \geqq \frac{5\ sec}{5\%} \geqq 100sec$$

$$P_{npk} \leqslant \frac{T P_{av} - t P_{pk}}{T-t}$$

$P_{npk} \leqslant 710W$

Note: When the output voltage is adjusted to the upper limit, the peak power is 150% rated power.



Downloaded from Arrow.com.

## 2.Remote Control

The PSU can be turned ON/OFF by using the "Remote Control" function with external switch.

| PSU Vo Status | Between RC+ (pin11) and 5V-AUX(pin13) on CN1 |
|---|---|
| POWER ON | SW close (Short) |
| POWER OFF | SW open (Open) |

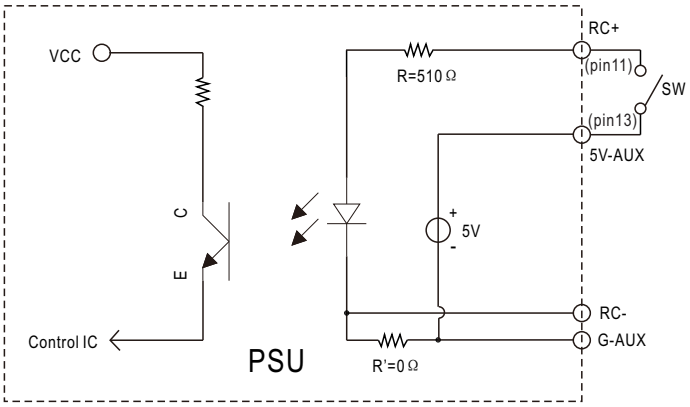


## 3.Remote Sense

The remote sensing compensates voltage drop on the load wiring up to 0.3Vdc.

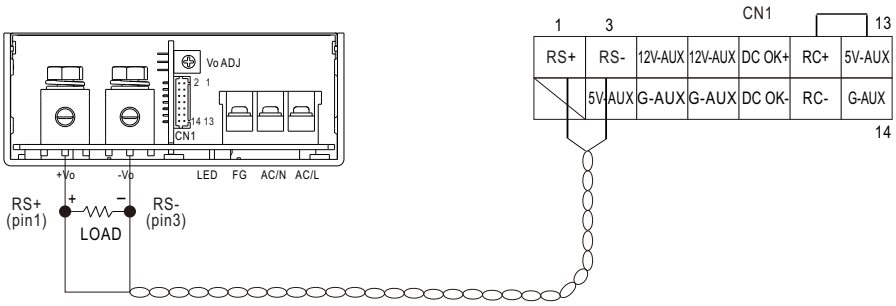


Sense lines should be twisted in pairs

## 4.DC_OK signal

DC_OK is a collector shorted signal. It is used by an optocoupler in the power supply which indicates the output status of the power supply as exhibited below.

| PSU Vo Status | Photo transistor |
|---|---|
| POWER ON | Conduct(Low impedance) |
| POWER OFF | Open(High impedance) |

Optocoupler Rating(max.) 15Vdc/10mA resistive load

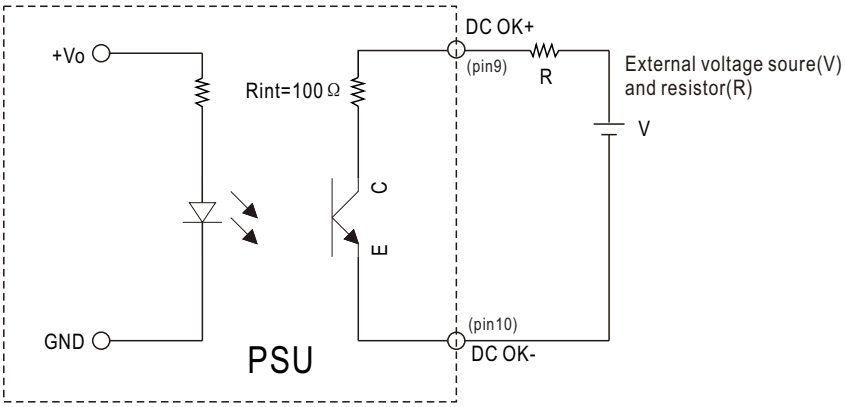




Downloaded from Arrow.com.

## ■ Mechanical Specification

(Unit: mm , tolerance ± 1mm)

Case No.980D

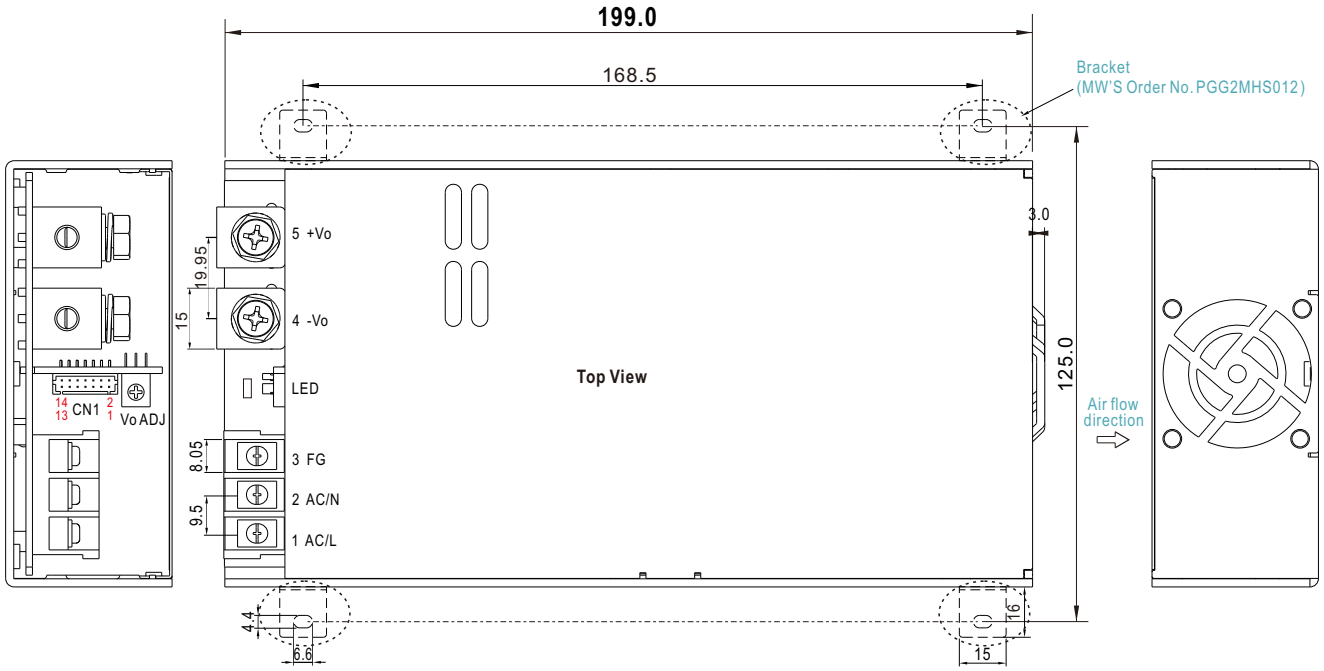


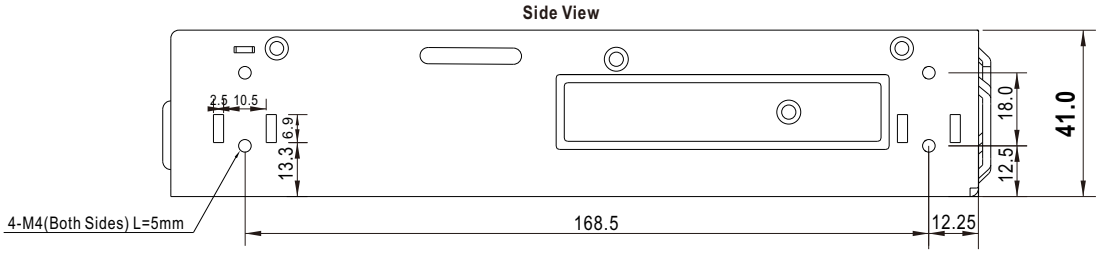


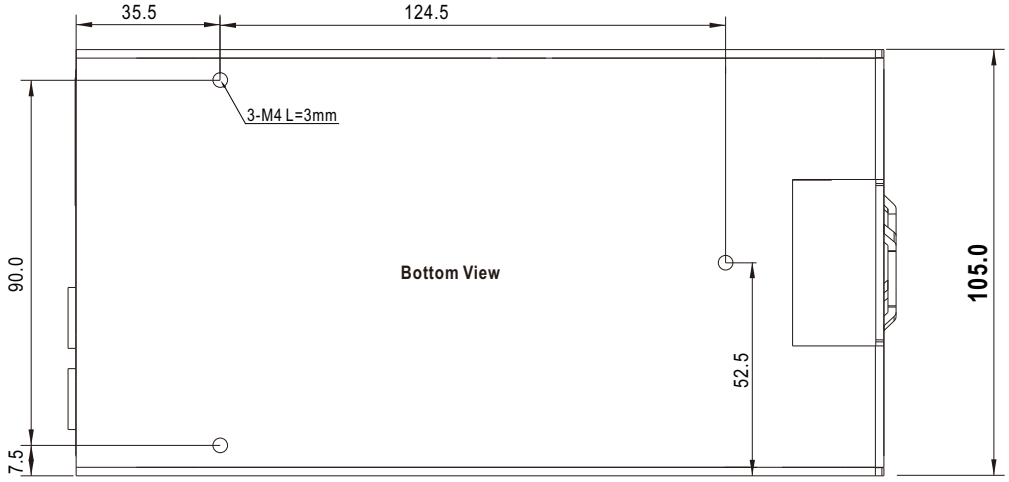


※ AC Input Terminal Pin No. Assignment

| Pin No. | Assignment | Diagram | Screw Size | Maximum mounting torque |
|---|---|---|---|---|
| 1 | AC/L or DC input +Vin | 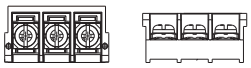 | M3.5 | 8~10Kgf-cm |
| 2 | AC/N or DC input -Vin | | | |
| 3 | FG ⏚ | | | |



Downloaded from Arrow.com.

※ DC Output Terminal Pin No. Assignment

| Pin No. | Assignment | Diagram | Screw Size | Maximum mounting torque |
|---|---|---|---|---|
| 4 | -Vo | | M5 | 10~12Kgf-cm |
| 5 | +Vo | | | |

※ Control Pin No. Assignment (CN1) : HRS DF11-14DP-2DS or equivalent

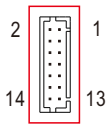


| | |
|---|---|
| Mating Housing | HRS DF11-14DS or equivalent |
| Terminal | HRS DF11-**SC or equivalent |

| Pin No. | Function | Description |
|---|---|---|
| 1 | RS+ | Positive sensing for remote sense. |
| 2 | NC | Reserve |
| 3 | RS- | Negative sensing for remote sense. |
| 4,13 | 5V-AUX | Auxiliary voltage output, 4.25~5.75Vdc, referenced to pin 6,8,14(G-AUX).<br>The maximum load current is 0.2A. This output is not controlled by the "remote ON/OFF control". |
| 5,7 | 12V-AUX | Auxiliary voltage output, 10.2~13.8Vdc, referenced to pin 6,8,14(G-AUX).<br>The maximum load current is 0.8A. This output is not controlled by the "remote ON/OFF control". |
| 6,8,14 | G-AUX | Auxiliary voltage output ground.<br>The signal return is isolated from the output terminals (+Vo & -Vo). |
| 9 | DC OK+ | Positive sensing for DC OK. |
| 10 | DC OK- | Negative sensing for DC OK. |
| 11 | RC+ | Turns the output on and off by electrical or dry contact between pin 11 ( RC+) and pin 13 (5V-AUX).<br>Short: Power ON, Open: Power OFF. |
| 12 | RC- | The output is internally connected to pin 6,8,14(G-AUX). |

## ■ Accessory List

| No. | Item | | Quantity |
|---|---|---|---|
| 1 | Control function interface(CN1) mating wire along with NSP-750 (standard accessory) | 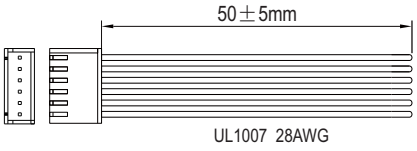 | 1pcs/per model |
| 2 | Bracket<br>MW'S Order NO. :PGG2MHS012<br>(Optional accessories can be purchased separately) | 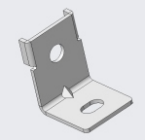 | 4pcs/per model<br>(Please refer to Installation Diagram) |
| 3 | Terminal cover<br>MW'S Order NO. : PEE4TBC-03<br>(Optional accessories can be purchased separately) | | 1pcs/per model |



Downloaded from Arrow.com.

## ■ Installation Diagram

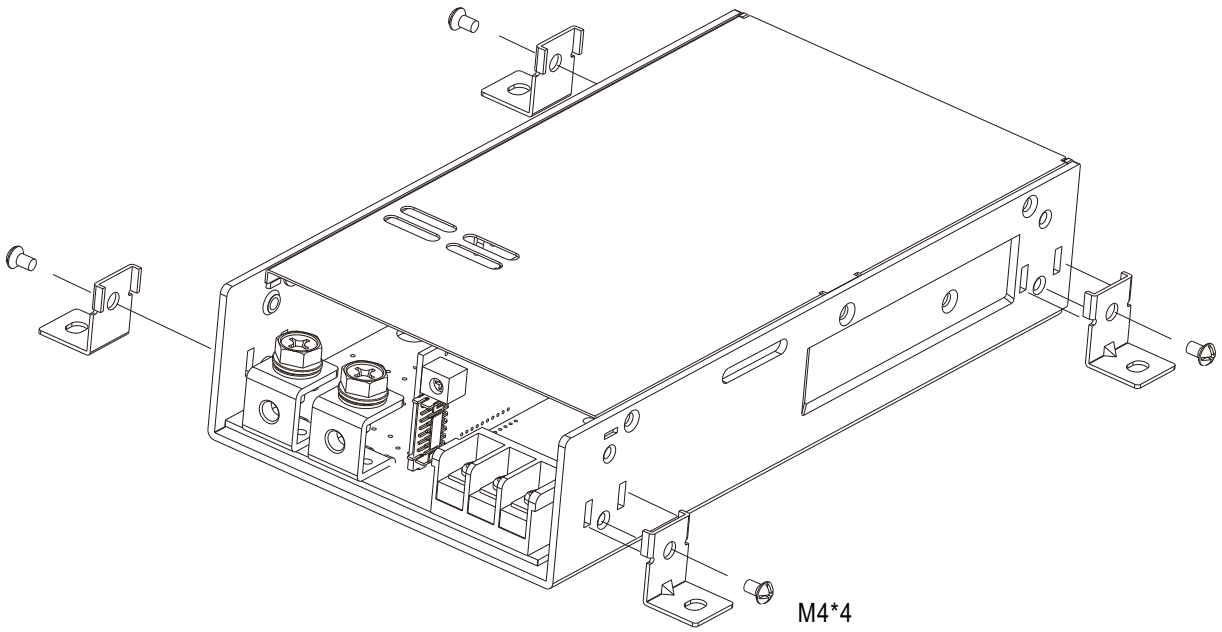


## ■ Installation Manual

Please refer to : http://www.meanwell.com/manual.html



Downloaded from Arrow.com.