MICRO SPEAKER

Product No. 130555

BMS2212F-11-08H3.9-02

Issue no. BS/TES01.2261

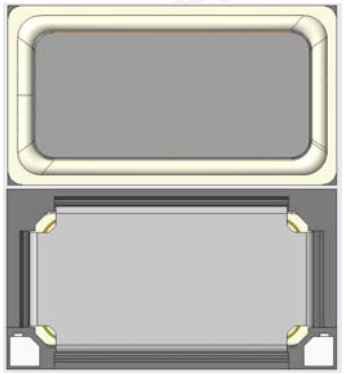

Features:

- Loud sound output
- RoHS

BESTAR Holdings Co., Ltd.

www.be-star.com | info@be-star.com

Downloaded from Arrow.com.

Content:

1 Characteristics 3
1.1 Technical terms 3
1.2 Test method 4
1.3 Frequency Response Curve 5
1.4 F0 Curve 6
1.5 Total Harmonic Distortion 7
1.6 R&B Curve 8
2 Part List 9
3 Dimension 10
4 Reliability Test 11
Packing 12
5.1 Packing drawing 12
5.2 Packing quantity 12
6 History change record 13
7 Important Notice 14

Downloaded from Arrow.com.

1.Characteristics

1.1 Technical terms

1. Size	22*12*3.9H mm(uint)
2. Impedance at 2KHz	8±20%Ω
3. Lowest Resonance frequency	740±20%Hz(in 3cc box)
4.Frequency Response	F0~16KHz
5. Rated input power	2.0W(in 3cc box)
6. Maximum input power	2.5W(in 3cc box)
7. Buzz & Rattle(at sine wave 4V)	must be normal between 300~3400Hz(in 3cc box)
8. SPL(2W 10cm)	102±3dB at 0.8,1.0,1.18,1.5KHz Ave(in 3cc box)
9. THD(2W 10cm)	≤10% at 1kHz
10.Weight	≈4g
11. Storage temperature	-30...+70℃
12. Operating temperature	-20...+60℃

Downloaded from Arrow.com.

1.2 Test method:

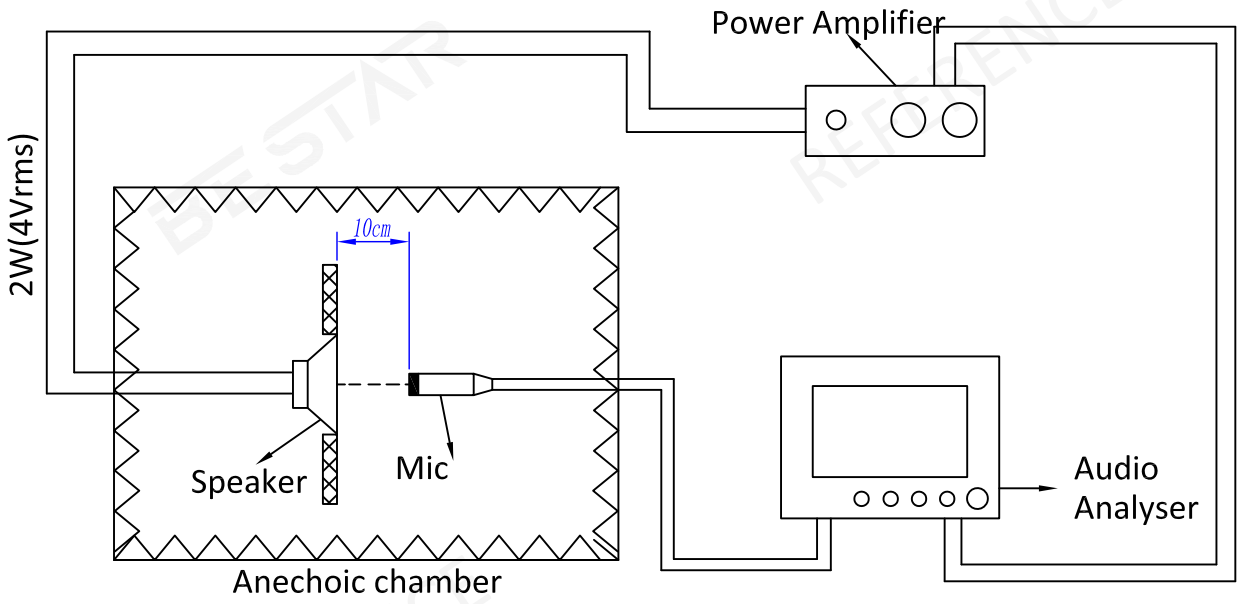

Downloaded from Arrow.com.

1.3 Frequency Response Curve (only for reference)

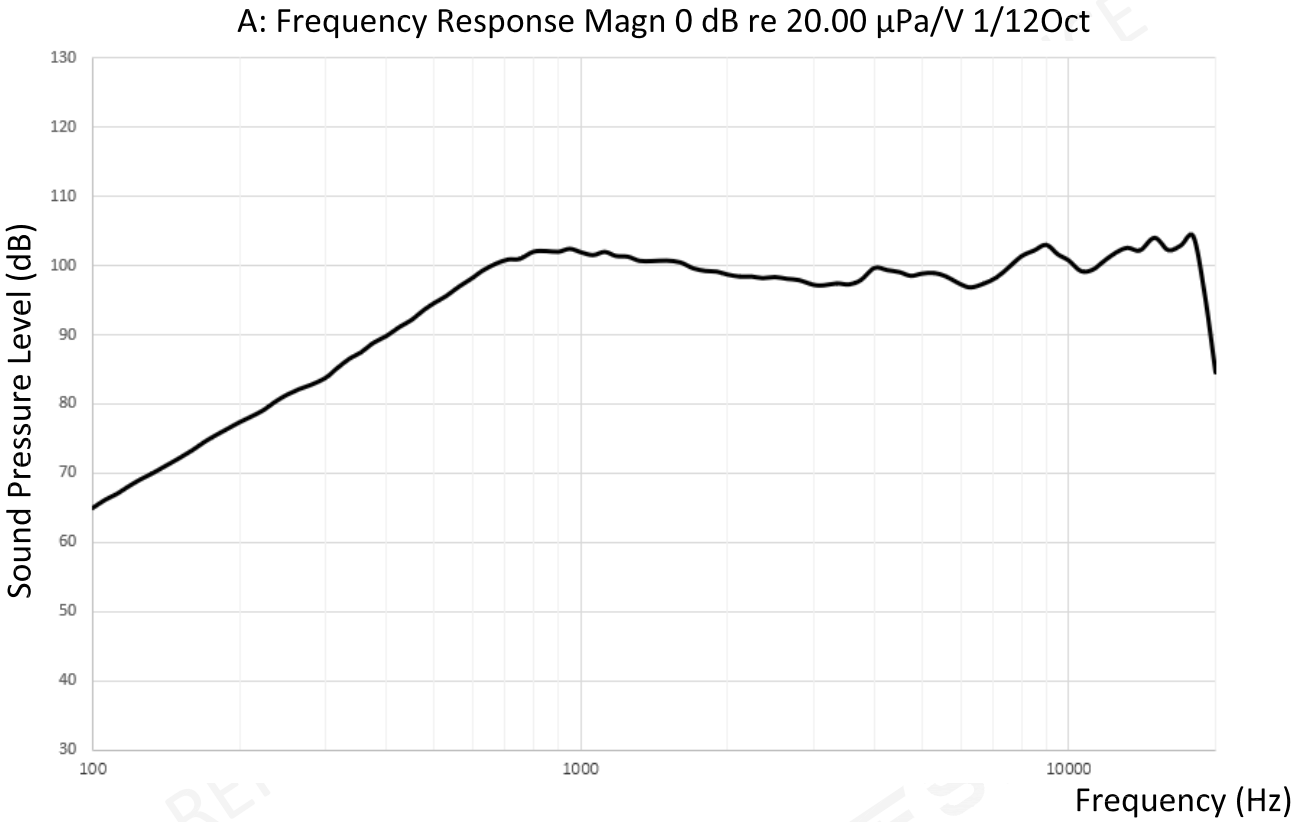

1.3.1 Sensitivity

SPL is expressed in dB rel 20 µPa,computed according to IEC 268-5.
Measurement set up according chapter 1.2 and parameters according chapter 1.3.

Downloaded from Arrow.com.

1.4 F0 Curve (only for reference)

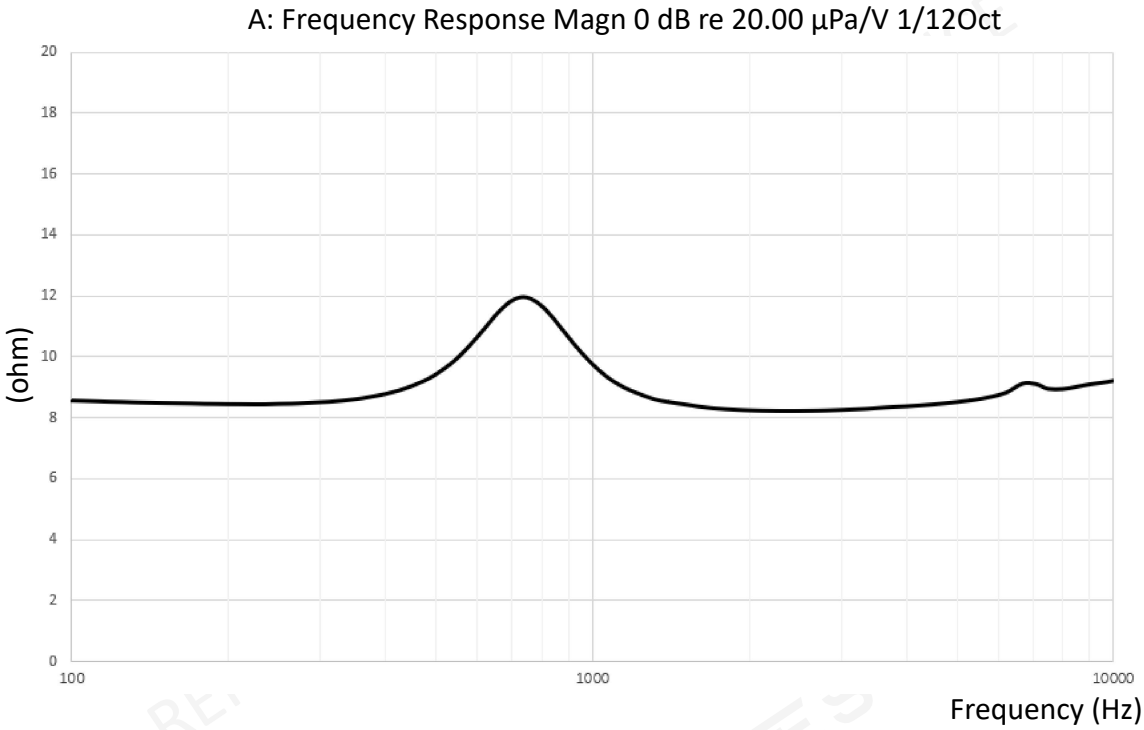

1.4.1 Resonance Frequency

Resonance frequency is measured according test set up in chapter 1.2 and parameters according chapter 1.4

Downloaded from Arrow.com.

1.5 Total Harmonic Distortion (only for reference)

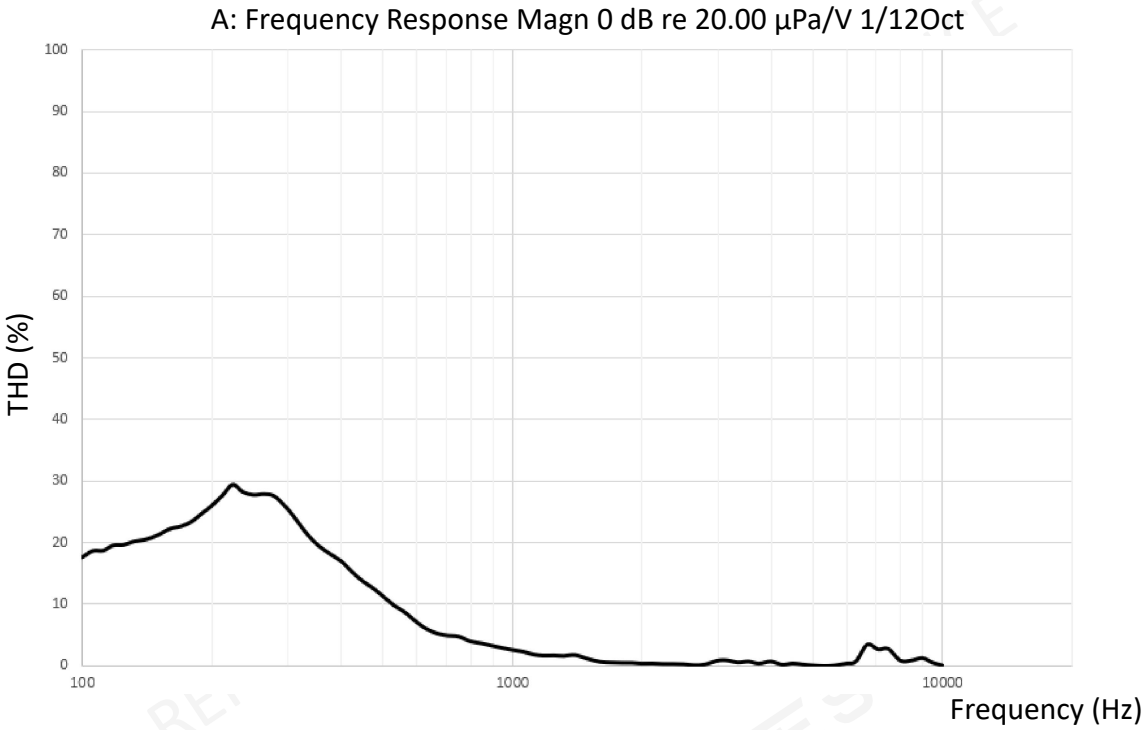

1.5.1 THD

THD is measured according test set up in chapter 1.2 and parameters according chapter 1.5

Downloaded from Arrow.com.

1.6 R&B Curve (only for reference)

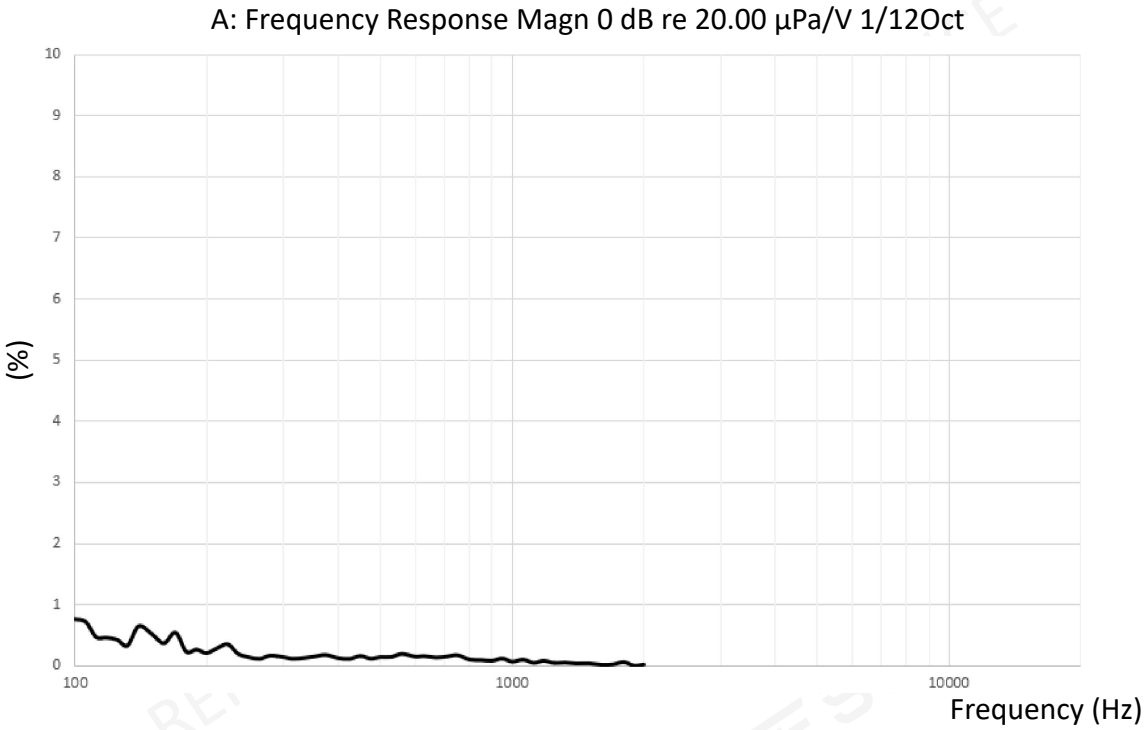

1.6.1 R&B

R&B is measured according test set up in chapter 1.2 and parameters according chapter 1.6

Downloaded from Arrow.com.

2.Part List

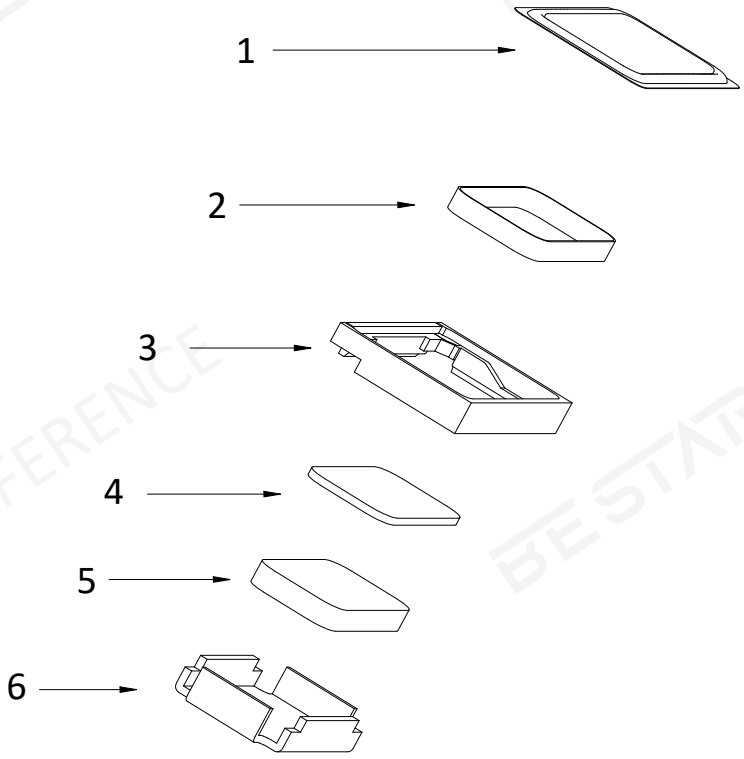

6. Yoke	SPCC
5. Magnet	NdFeB
4. Plate	SPCC
3.Frame	PPA+SUS
2.Voice coil	Cu
1. Diaphragm	PEEK+PMI

Downloaded from Arrow.com.

3. Dimension

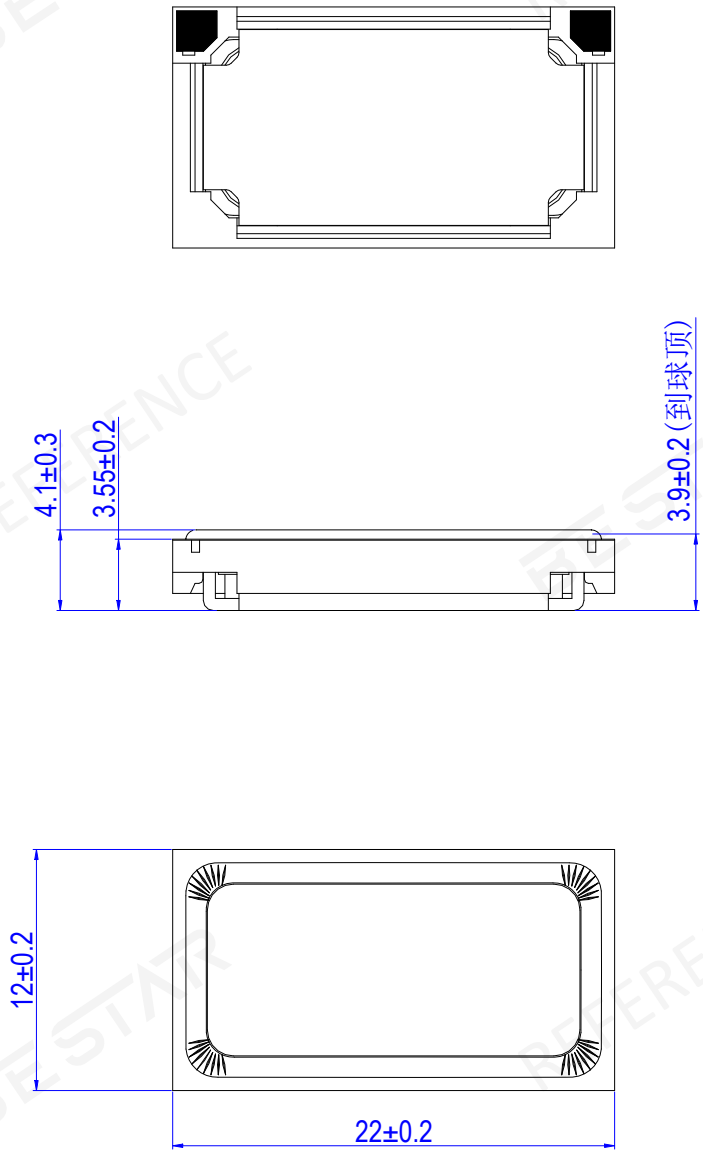

Tolerance:±0.2mm

Downloaded from Arrow.com.

4. Reliability test

4.1High temperature preservation test

Temperature	+70℃
Duration	96hrs

4.2 Low temperature preservation test

Temperature	-30℃
Duration	96hrs

4.3 Humidity Test

Temperature	+40±3℃
Relative Humidity	92%-95%RH
Duration	96hrs

4.4 Thernal Humidity Cycling

The part shall be subjected 5 cycles.

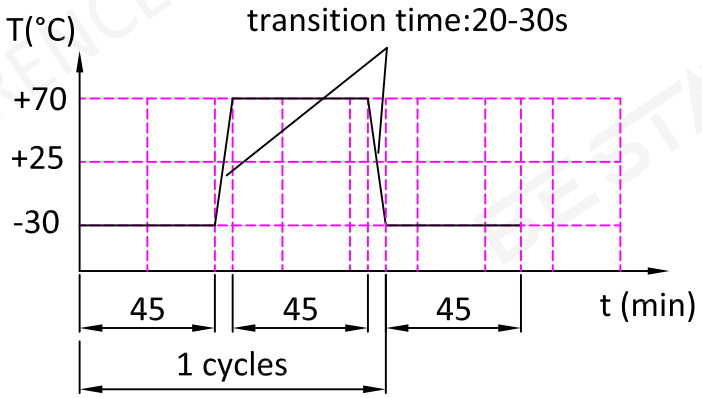

4.5 Short Term Maximum Power test

Test for 1 hour under maximum power. Input shall be pink noise（300~3400Hz） in rated frequency response. And the signal will be 1 second on, 59 seconds off, total 60 cycles.

4.6 Drop test

Drop the speaker contained in normal box onto the surface of 5mm thick board 10 times from the height of 100cm.

4.7 Operation Life Test

At room temperature, the Pink noise signal（300~3400Hz）of the rated power input of the product works continuously for 96 hours.

Downloaded from Arrow.com.

5. Packing

5.1 Packing drawing (unit:mm)

TBD

Downloaded from Arrow.com.

6. History change record

Version	Change Items	Date	Drawn	Checked	Approved
A0	First Edition	2023.09.25	Frank.Wang	Emma. Ren	Jason.Zhang

REFERENCE BE STAR

Downloaded from Arrow.com.

7.Important Notice

7.1 The products mustn't be washed

7.2 Storage Condition (Packaging)

The products should be stored in the room ,where the temperature/humidity is stable. And avoid suchplaces where there are large temperature changes. Please store the products at the following conditions: Temperature: -10 to + 40 ℃ Humidity: 15 to 85% R.H.

7.3 Expire Date on Storage

Expire date (Shelf life) of the products is six months after deliveried under the conditions of a sealed and an unopened package. Please use the products within six months after deliveried.

If you store the products for a long time (more than six months), use carefully because the products may be degraded in the solderability and/or rusty.Please confirm solderability and characteristics for the products regularly.

7.4 Notice on Product Storage

(1) Please do not store the products in a chemical atmosphere (Acids, Alkali, Bases, Organic gas, Sulfides and so on), because the characteristics may be reduced at quality, and/or be degraded in the solderability due to the storage in a chemical atmosphere.

(2) Please use the products immediately after the package is opened, because the characteristics may be reduced at quality, and/or be degraded in the solderability due to storage under the poor condition.

7.5 Rated and Max input power

Rated input power

Rated input power is the maximum (limit) value which can be input to the component intentionally. If the actual input power to component keeps exceeding Rated Input power, it will damage the component acoustic performances and reliability. In the worst case, the component will get broken and no sound.

Max input power

Max input power is the maximum (limit) value for unexpected input power which is caused in the customer's circuit like surge voltage. If the actual input power to component keeps exceeding Maximum input power, it will break the component and cause no sound in a short time. Please note that component will have a risk to get broken if the unexpected input power continues.

The value of input power is set based on the sinusoidal power in the normal speaker use. If the special signal is input to component, the values of Rated and Max input power will be different. Please make a well-investigation at your laboratory in the case of the special signal input.

Downloaded from Arrow.com.