SYMBOL DEFINITION		
A DIMENSION WITHOUT AN INSPECTION REPORT SYMBOL DOES NOT REQUIRE INSPECTION. IT MAY BE CONTROLLED ON THE INDIVIDUAL COMPONENT DRAWING.	TOTAL NO OF INSPECTIONS REQUIRED	282
	LAST NO. USED	30

MISSING SYMBOLS

NO MISSING SYMBOL NUMBER

DWG STATUS DATE	SIZE	REV	N/P	CHG	ZONE	REVISION HISTORY	AUTH	DR	APVD	APVD
15JN20	R	01	-	-	-	35264515 - WAS SEPARATE DRAWING1 35473802 - RELEASED PART DRAWING	951793	EVV	EVV	AC
13JL20	R	02	-	-	-	SHT 1 OF 2 WAS SHT 1 OF 1 35473802 - MOVE TO SHT02; 35466515 - WAS PE467829 AND RELEASED1 35466516 - WAS PE467848 AND RELEASED1	951947	CDD	CDD	EDA
03DE21	R	03	-	-	-	35466515 & 35466516 - UPDATED PART AVAILABILITY: (P/N WAS NOT AVAILABLE)	556673	ESB	EVV	EDA

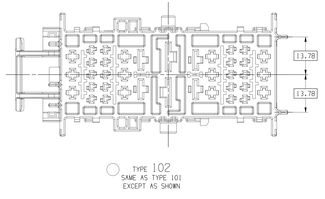

TYPE 102
SAME AS TYPE 101
EXCEPT AS SHOWN

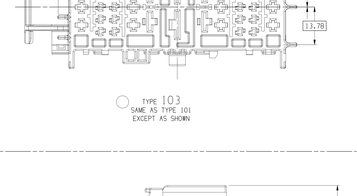

TYPE 103
SAME AS TYPE 101
EXCEPT AS SHOWN

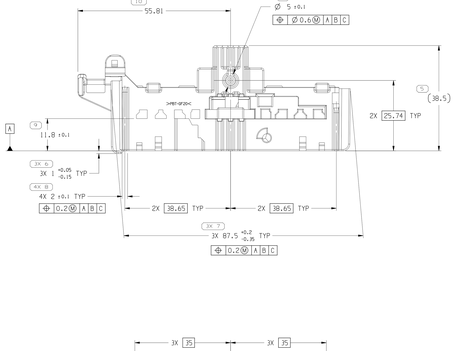

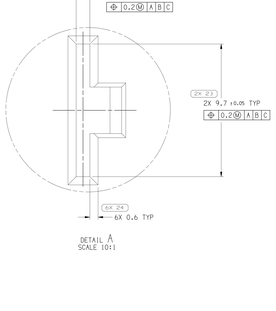

DETAIL A
SCALE 10:1

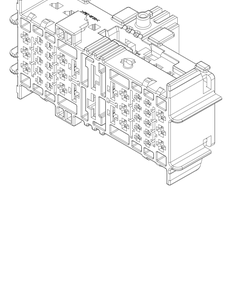

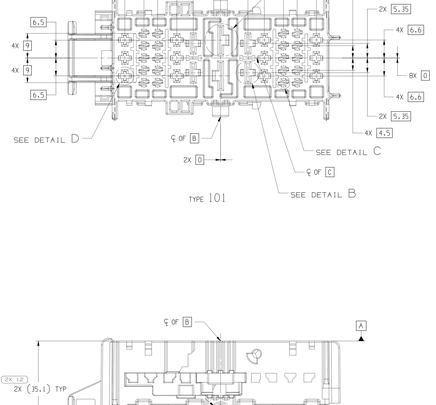

TYPE 101

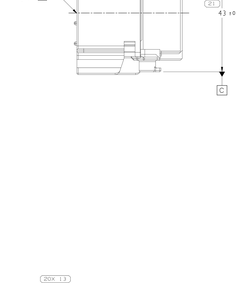

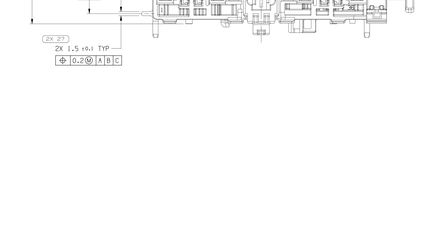

DETAIL D
SCALE 10:1

DETAIL C
SCALE 10:1

DETAIL B
SCALE 10:1

NOTES

1. UNLESS OTHERWISE SPECIFIED AND/OR INDICATED:

   DIMENSIONS ARE TO FACE OF VIEW SHOWN AND AUTOMATICALLY ROUNDED BY COMPUTER FOR INSPECTION (SEE MATH MODEL FOR PRECISE DIMENSIONS). FOR ALL OTHER DIMENSIONS NOT SHOWN BUT REQUIRED FOR TOOL BUILD, SEE MATH MODEL FOR PRECISE TOOL PATH DATA.

2. MATERIAL RECYCLING CODE PER ISO 11469, 11)X10.11 CHARACTERS AS SHOWN TO BE LOCATED ON ANY EXTERIOR SURFACE.

3. THIS PRODUCT IS NOT CATEGORIZED AS AN APPEARANCE ITEM. MINOR IMPERFECTIONS INCLUDING, BUT NOT LIMITED TO, FLOW MARKS, COLOR BLEMISHES, GATE VESTIGE, AND SOFT FLASH THAT DO NOT AFFECT THE FIT, FORM, OR FUNCTION OF THE PART ARE PERMISSIBLE PER EAMP.4-3.CS.01.EN.

4. CORPORATE BRAND TO BE APPLIED TO PRODUCT DESIGN PER THE LATEST REVISION OF ESD S10B5201.

5. FOR APPLICATION DATA SEE THE INDIVIDUAL APPLICATION DRAWINGS.

6. THIS CONNECTOR DOES NOT MEET SAE/USCAR-2 2013 -6. SECTION 5.4.8 CONNECTOR DROP TEST.

7. FOR PN 35473802 SEE SHT02.

PART NO	REV	N/P	TYPE	MATERIAL SPECIFICATION AND COLOR	VOLUME (CM³)
35466516	01	AA	103	POLYESTER COMPOUND GRAY	38.389
35466515	01	AA	102	POLYESTER COMPOUND BLACK	38.359
35264615	01	AB	101	POLYESTER COMPOUND BLUE	38.389

DRAWING NUMBER: 35473803
A1x3 | SCALE 2:1 | FRAME NO 2 OF 2 | SHEET NO 1 OF 2 | R | REV 03 | N/P -

DIMENSIONAL RANGE (MM)									
FROM	0	>6	>30	>120	>315	>1000	>2000	>4000	>8000
TO	6	30	120	315	1000	2000	4000	8000	16000
TOLERANCE UNLESS OTHERWISE SPECIFIED									
±0.25	±0.5	±0.8	±1.2	±2	±3	±4	±5	±6	±7
ANGULAR TOLERANCE ±0°									

(19) PROCESS SENSITIVE DIMENSION

REFERENCE

DIMENSIONS ENCLOSED IN ( ) INDICATE REFERENCE DIMENSIONS AND NO TOLERANCE WILL BE ESTABLISHED.

THIRD ANGLE PROJECTION

DO NOT SCALE

USE MATH DATA

NX

1. LINE DRAWN THROUGH A PART NUMBER INDICATES THAT PHYSICAL PARTS ARE NOT AVAILABLE FOR ORDERING.

   PART NUMBERS THAT DO NOT HAVE A LINE PRESENT INDICATE THAT PHYSICAL PARTS ARE AVAILABLE FOR ORDERING.

   CONTACT APTIV SALES TO ASSURE AVAILABILITY OF PARTS.

MAIN TITLE: PART DRAWING

TITLE

VOLUME (CM³)

SYSTEM CODE: D

UNLESS OTHERWISE SPECIFIED

THIS DOCUMENT IS IN ACCORDANCE WITH ASME Y14.5M-1994 UNLESS OTHERWISE SPECIFIED. ALL DIMENSIONS TOLERANCING MAXIMUM MATERIAL. SEPARATE PATTERNS OF FEATURES MAY BE GAGED SEPARATELY REGARDLESS OF DATUM REFERENCES.

ALL DIMENSIONS ARE IN MILLIMETERS

		DATE
DR		
APVD1	ELIAS VAZQUEZ Y.	15JN20
APVD2	ELIAS VAZQUEZ Y.	15JN20
APVD3	A. CARRIZALES	16JN20
APVD4		
APVD5		

SUBSTANCES OF CONCERN AND RECYCLED CONTENT PER APTIV (DRAWING)

MATERIAL: SEE CHART

DRAWING NAME: TAXI CONN 3B F CTS 150 280 630

DRAWING NUMBER: 35473803

A1x3 | SCALE 2:1 | FRAME NO 1 OF 1 | SHEET NO 1 OF 2 | R | REV 03 | N/P -

•APTIV•
CONNECTION SYSTEMS
WARREN, OH

COPYRIGHT 2020 APTIV. ALL RIGHTS RESERVED.

THIS DRAWING IS THE PROPERTY OF APTIV AND CONTAINS APTIV CONFIDENTIAL INFORMATION. THE REPRODUCTION, DISTRIBUTION AND UTILIZATION OF THIS DOCUMENT OR ITS RELATED CAD MATH DATA, AS WELL AS COMMUNICATION OF ANY CONTENTS TO OTHERS, WITHOUT EXPRESS AUTHORIZATION, IS PROHIBITED.

3B47 3803