Voltage Regulator - Micropower

MC78LC00 Series

The MC78LC00 series of fixed output low dropout linear regulators are designed for handheld communication equipment and portable battery powered applications which require low quiescent current. The MC78LC00 series features an ultra−low quiescent current of 1.1 μA. Each device contains a voltage reference unit, an error amplifier, a PMOS power transistor, and resistors for setting output voltage.

The MC78LC00 has been designed to be used with low cost ceramic capacitors and requires a minimum output capacitor of 0.1 μF. The device is housed in the micro−miniature Thin SOT23−5 surface mount package Standard voltage versions are 1.8, 2.5, 3.0, 3.3, V.

Features

- Low Quiescent Current of 1.1 μA Typical
- Excellent Line and Load Regulation
- Maximum Operating Voltage of 12 V
- Low Output Voltage Option
- High Accuracy Output Voltage of 2.5%
- Industrial Temperature Range of −40°C to 85°C
- Surface Mount Packages (SOT−23, 5 Pin)
- These are Pb−Free Devices

Typical Applications

- Battery Powered Instruments
- Hand−Held Instruments
- Camcorders and Cameras

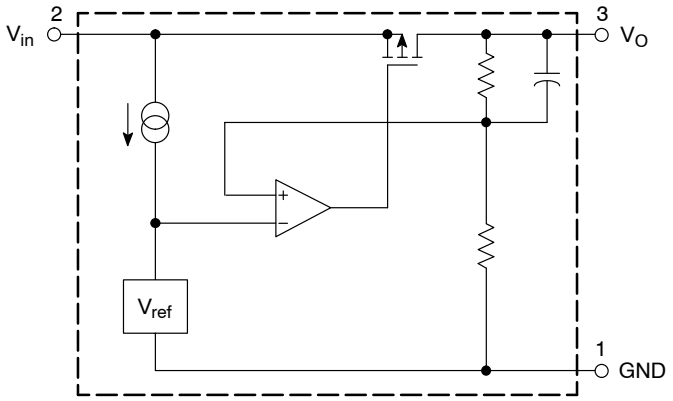

This device contains 8 active transistors.

Figure 1. Representative Block Diagram

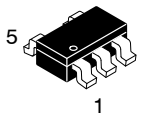

TSOP−5
NTR SUFFIX
CASE 483

MARKING DIAGRAMS AND PIN CONNECTION

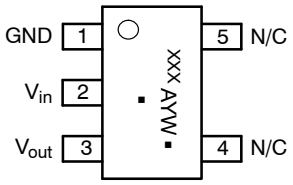

(Top View)

(Tab is connected to Pin 2)

XXX = Specific Device Code
A = Assembly Location
Y = Year
W = Work Week
▪ = Pb−Free Package

(Note: Microdot may be in either location)

ORDERING INFORMATION

See detailed ordering and shipping information in the package dimensions section on page 10 of this data sheet.

© Semiconductor Components Industries, LLC, 2016

Downloaded from Arrow.com.

PIN FUNCTION DESCRIPTION

Pin No.	Pin Name	Description
1	GND	Power supply ground
2	V_{in}	Positive power supply input voltage
3	V_{out}	Regulated Output
4	N/C	No Internal Connection
5	N/C	No Internal Connection

MAXIMUM RATINGS

Rating	Symbol	Value	Unit
Input Voltage	V_{in}	12	V
Output Voltage	V_{out}	−0.3 to V_{in} +0.3	V
Power Dissipation and Thermal Characteristics Case 483−01 (Thin SOT23−5) NTR Suffix Power Dissipation @ T_A = 85°C Thermal Resistance, Junction−to−Ambient	 P_D $R_{\theta JA}$	 140 280	 mW °C/W
Operating Junction Temperature	T_J	+125	°C
Operating Ambient Temperature	T_A	−40 to +85	°C
Storage Temperature	T_{stg}	−55 to +150	°C
Lead Soldering Temperature @ 260°C	T_{solder}	10	s

Stresses exceeding those listed in the Maximum Ratings table may damage the device. If any of these limits are exceeded, device functionality should not be assumed, damage may occur and reliability may be affected.

Downloaded from Arrow.com.

ELECTRICAL CHARACTERISTICS (V_{in} = $V_{out(nom.)}$ + 1.0 V, C_{in} = 1.0 μF, C_{out} = 1.0 μF, T_J = 25°C, unless otherwise noted.) (Note 5)

NTR SUFFIX

Characteristic	Symbol	Min	Typ	Max	Unit
Output Voltage (T_A = 25°C, I_{out} = 1.0 mA)	V_{out}				V
1.5 V		1.455	1.5	1.545	
1.8 V		1.746	1.8	1.854	
2.5 V		2.425	2.5	2.575	
2.7 V		2.646	2.7	2.754	
2.8 V		2.744	2.8	2.856	
3.0 V		2.94	3.0	3.06	
3.3 V		3.234	3.3	3.366	
4.0 V		3.9	4.0	4.1	
5.0 V		4.90	5.0	5.10	
Output Voltage (T_A = −40°C to 85°C)	V_{out}				V
1.5 V		1.455	1.5	1.545	
1.8 V		1.746	1.8	1.854	
2.5 V		2.425	2.5	2.575	
2.7 V		2.619	2.7	2.781	
2.8 V		2.716	2.8	2.884	
3.0 V		2.910	3.0	3.09	
3.3 V		3.201	3.3	3.399	
4.0 V		3.9	4.0	4.1	
5.0 V		4.90	5.0	5.10	
Line Regulation (V_{in} = $V_{O(nom.)}$ + 1.0 V to 12 V, I_{out} = 1.0 mA)	Reg_{line}	–	0.05	0.2	%/V
Load Regulation (I_{out} = 1.0 mA to 10 mA)	Reg_{load}	–	40	60	mV
Output Current (Note 6)	I_{out}				mA
1.5 V, 1.8 V (V_{in} = 4.0 V)		35	50	–	
2.5 V, 2.7 V, 2.8 V, 3.0 V (V_{in} = 5.0 V)		50	80	–	
3.3 V (V_{in} = 6.0 V)		50	80	–	
4.0 V (V_{in} = 7.0 V)		80	80	–	
5.0 V (V_{in} = 8.0 V)		80	100	–	
Dropout Voltage (I_{out} = 1.0 mA, Measured at V_{out} −3.0%)	V_{in}–V_{out}				mV
1.5 V		–	35	70	
1.6 V–3.2 V		–	30	60	
3.3 V–3.9 V		–	30	53	
4.0 V–5.0 V		–	30	38	
Quiescent Current (I_{out} = 1.0 mA to $I_{O(nom.)}$)	I_Q	–	1.1	3.6	μA
Output Voltage Temperature Coefficient	T_c	–	±100	–	ppm/°C
Output Noise Voltage (f = 1.0 kHz to 100 kHz)	V_n	–	89	–	μVrms

1. This device series contains ESD protection and exceeds the following tests:
   Human Body Model 2000 V per MIL−STD−883, Method 3015
   Machine Model Method 200 V
2. Latch up capability (85°C) ±100 mA
3. Maximum package power dissipation limits must be observed.

$$PD = \frac{T_{J(max)} - T_A}{R_{\theta JA}}$$

4. Low duty cycle pulse techniques are used during testing to maintain the junction temperature as close to ambient as possible.
5. Low duty pulse techniques are used during test to maintain junction temperature as close to ambient as possible.
6. Output Current is measured when V_{out} = V_{O1} − 3% where V_{O1} = V_{out} at I_{out} = 0 mA.

Downloaded from Arrow.com.

DEFINITIONS

Load Regulation

The change in output voltage for a change in output current at a constant temperature.

Dropout Voltage

The input/output differential at which the regulator output no longer maintains regulation against further reductions in input voltage. Measured when the output drops 3% below its nominal. The junction temperature, load current, and minimum input supply requirements affect the dropout level.

Maximum Power Dissipation

The maximum total dissipation for which the regulator will operate within its specifications.

Quiescent Current

The quiescent current is the current which flows through the ground when the LDO operates without a load on its output: internal IC operation, bias, etc. When the LDO becomes loaded, this term is called the Ground current. It is actually the difference between the input current (measured through the LDO input pin) and the output current.

Line Regulation

The change in output voltage for a change in input voltage. The measurement is made under conditions of low dissipation or by using pulse technique such that the average chip temperature is not significantly affected.

Line Transient Response

Typical over and undershoot response when input voltage is excited with a given slope.

Maximum Package Power Dissipation

The maximum power package dissipation is the power dissipation level at which the junction temperature reaches its maximum operating value, i.e. 125°C. Depending on the ambient power dissipation and thus the maximum available output current.

Downloaded from Arrow.com.

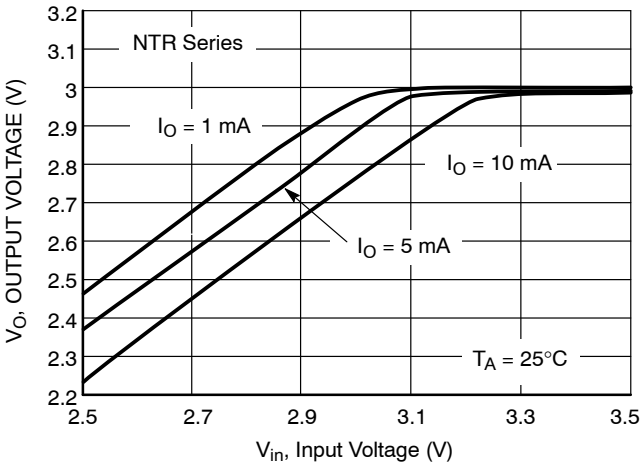

Figure 2. Output Voltage versus Input Voltage

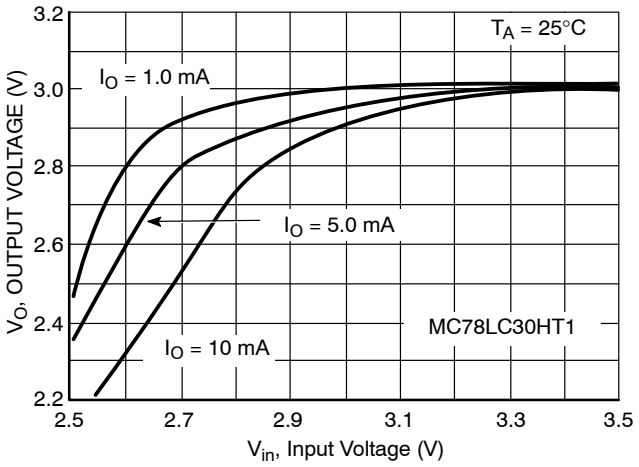

Figure 3. Output Voltage versus Input Voltage

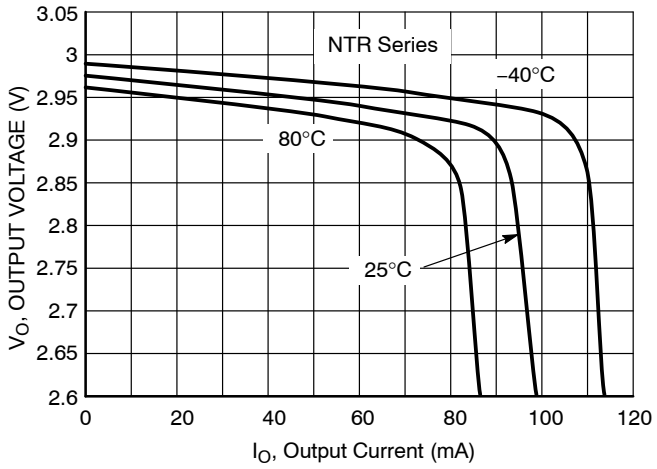

Figure 4. Output Voltage versus Output Current

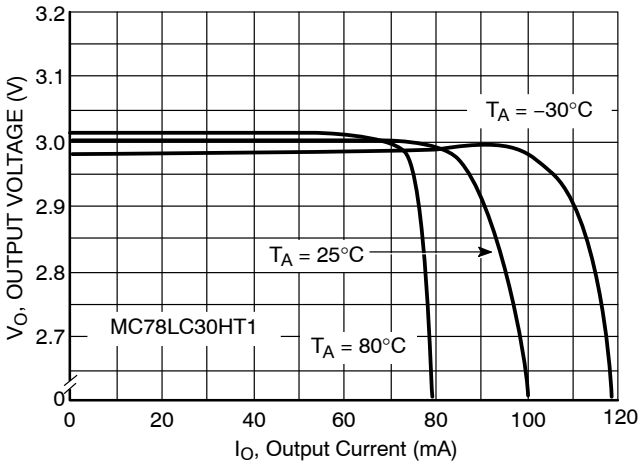

Figure 5. Output Voltage versus Output Current

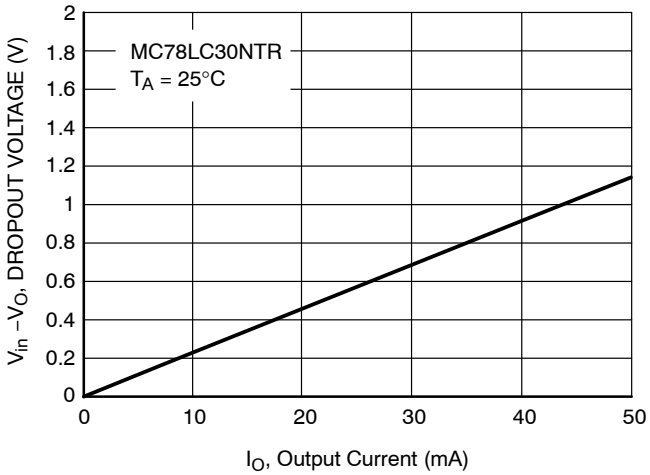

Figure 6. Dropout Voltage versus Output Current

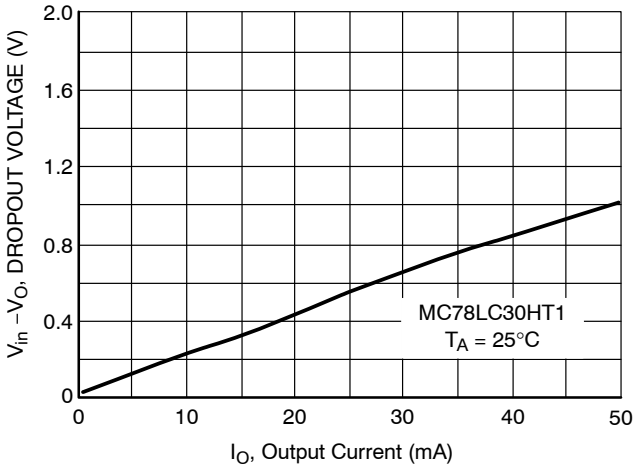

Figure 7. Dropout Voltage versus Output Current

Downloaded from Arrow.com.

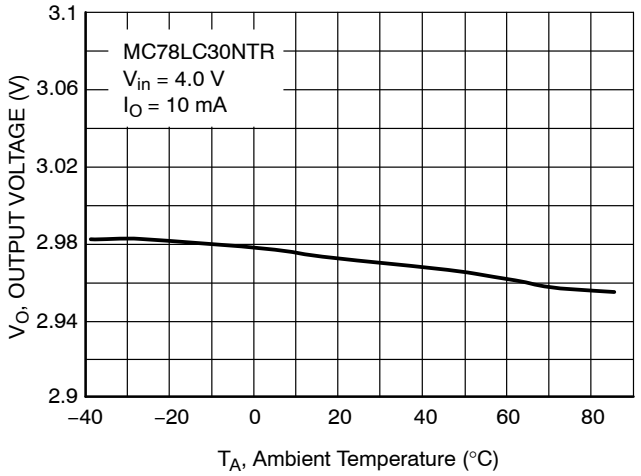

Figure 8. Output Voltage versus Temperature

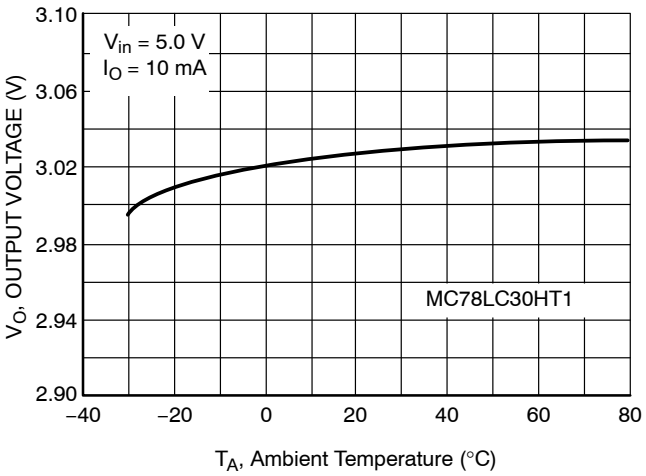

Figure 9. Output Voltage versus Temperature

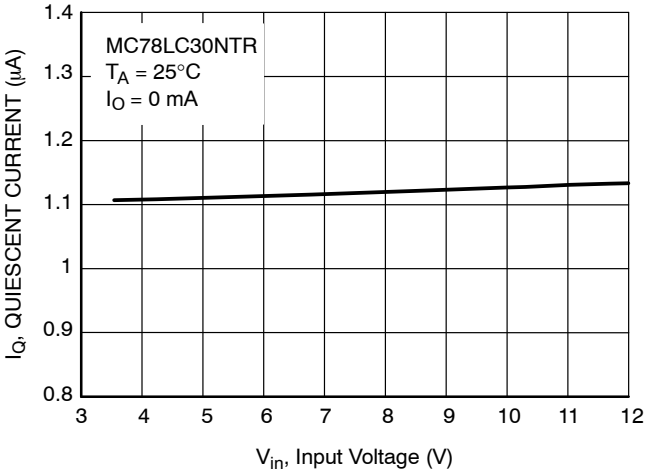

Figure 10. Quiescent Current versus Input Voltage

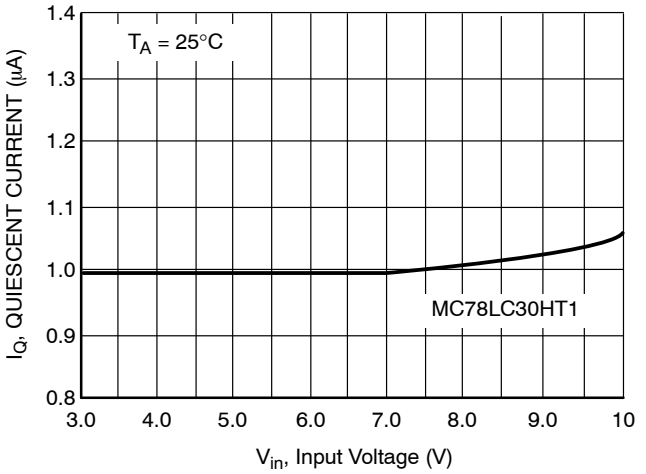

Figure 11. Quiescent Current versus Input Voltage

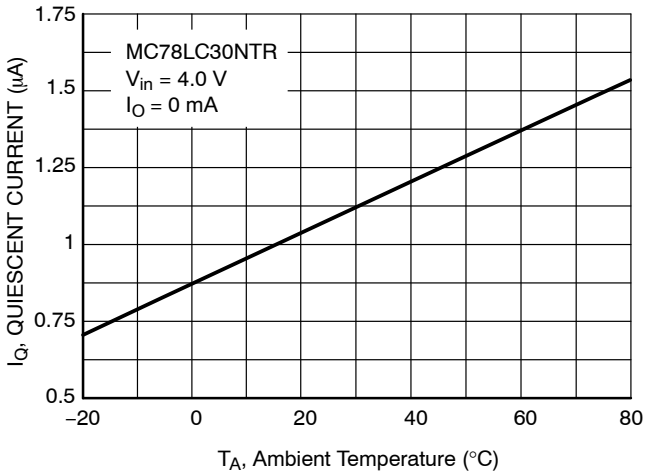

Figure 12. Quiescent Current versus Temperature

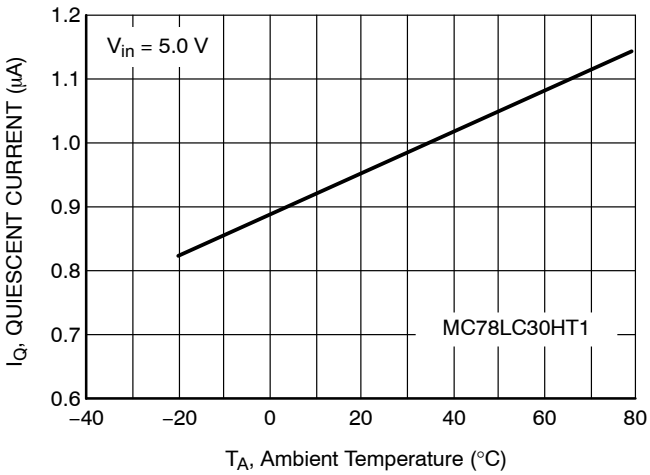

Figure 13. Quiescent Current versus Temperature

Downloaded from Arrow.com.

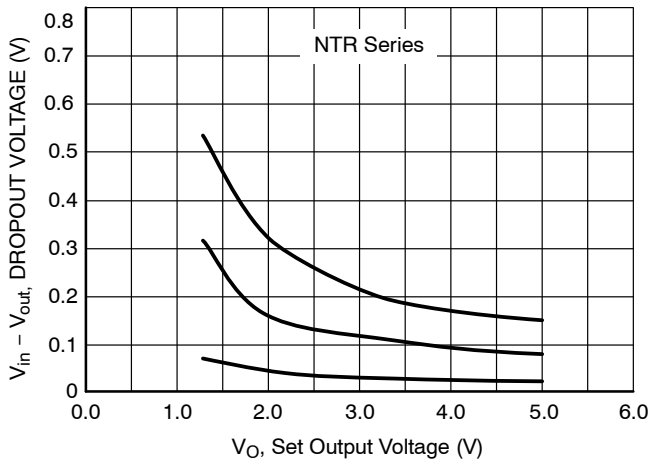

Figure 14. Dropout Voltage versus Set Output Voltage

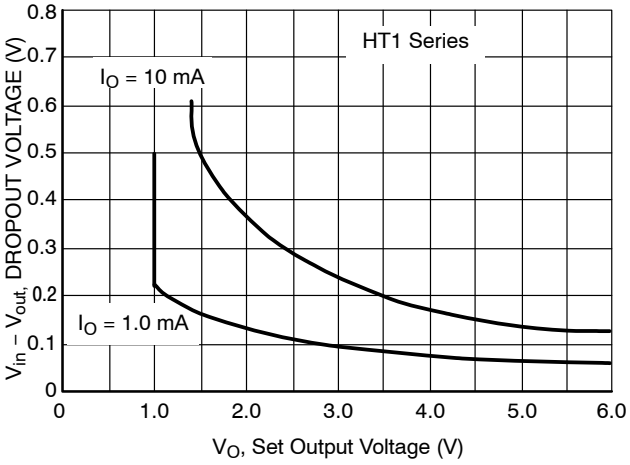

Figure 15. Dropout Voltage versus Set Output Voltage

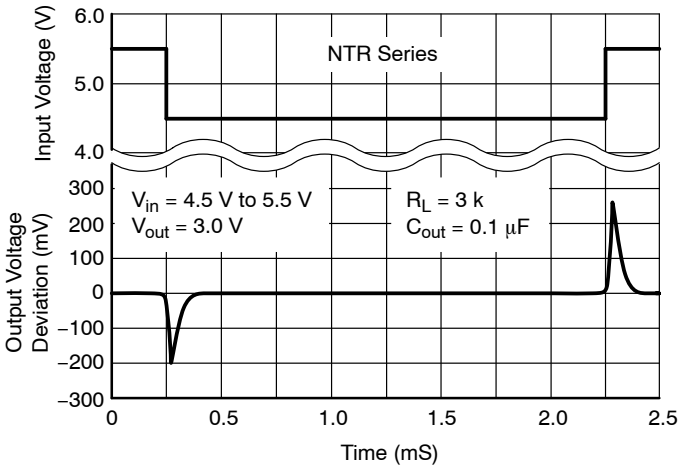

Figure 16. Line Transient

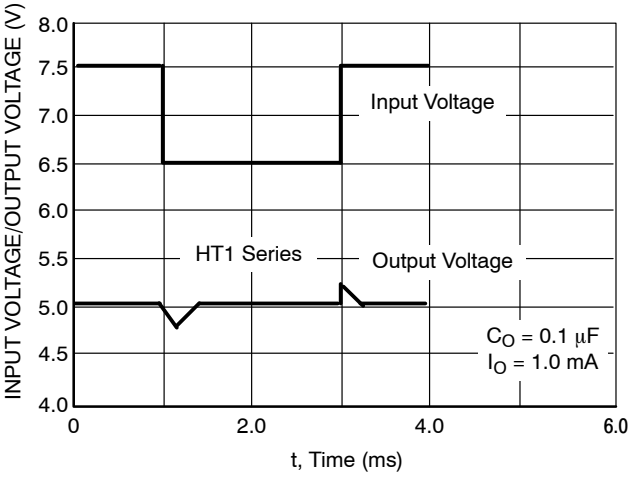

Figure 17. Line Transient Response

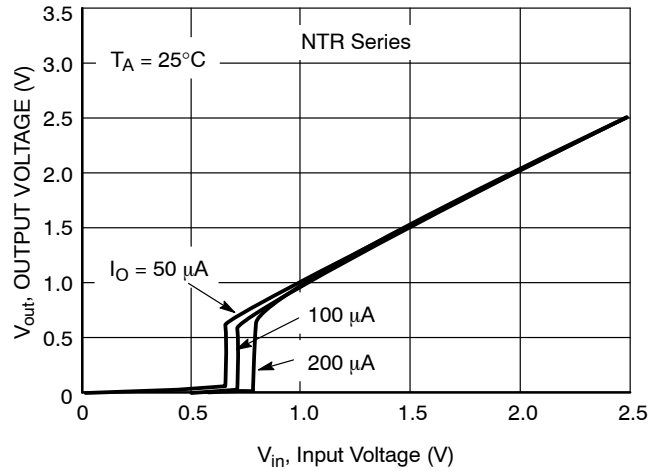

Figure 18. Output Voltage versus Input Voltage

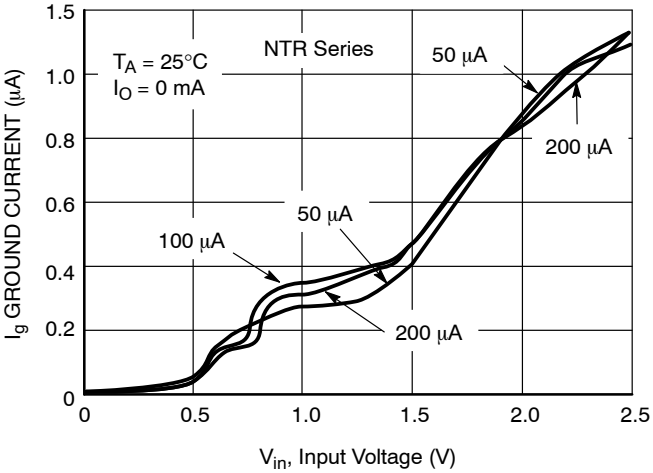

Figure 19. Ground Current versus Input Voltage

Downloaded from Arrow.com.

APPLICATIONS INFORMATION

A typical application circuit for the MC78LC00 series is shown in Figure 20.

Input Decoupling (C1)

A 0.1 μF capacitor either ceramic or tantalum is recommended and should be connected close to the MC78LC00 package. Higher values and lower ESR will improve the overall line transient response.

Output Decoupling (C2)

The MC78LC00 is a stable component and does not require any specific Equivalent Series Resistance (ESR) or a minimum output current. Capacitors exhibiting ESRs ranging from a few mΩ up to 3.0 Ω can thus safely be used. The minimum decoupling value is 0.1 μF and can be augmented to fulfill stringent load transient requirements. The regulator accepts ceramic chip capacitors as well as tantalum devices. Larger values improve noise rejection and load regulation transient response.

Hints

Please be sure the Vin and GND lines are sufficiently wide. When the impedance of these lines is high, there is a chance to pick up noise or cause the regulator to malfunction.

Set external components, especially the output capacitor, as close as possible to the circuit, and make leads as short as possible.

Thermal

As power across the MC78LC00 increases, it might become necessary to provide some thermal relief. The maximum power dissipation supported by the device is dependent upon board design and layout. Mounting pad configuration on the PCB, the board material, and also the ambient temperature effect the rate of temperature rise for the part. This is stating that when the MC78LC00 has good thermal conductivity through the PCB, the junction temperature will be relatively low with high power dissipation applications.

The maximum dissipation the package can handle is given by:

$$PD = \frac{T_{J(max)} - T_A}{R_{\theta JA}}$$

If junction temperature is not allowed above the maximum 125°C, then the MC78LC00NTR can dissipate up to 357 mW @ 25°C.

The power dissipated by the MC78LC00NTR can be calculated from the following equation:

$$P_{tot} = [V_{in} * I_{gnd}(I_{out})] + [V_{in} - V_{out}] * I_{out}$$

or

$$V_{inMAX} = \frac{P_{tot} + V_{out} * I_{out}}{I_{gnd} + I_{out}}$$

If an 80 mA output current is needed then the ground current from the data sheet is 1.1 μA. For an MC78LC30NTR (3.0 V), the maximum input voltage will then be 7.4 V.

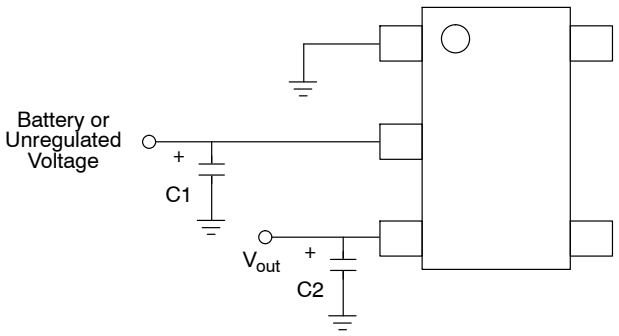

Figure 20. Basic Application Circuit for NTR Suffixes

Downloaded from Arrow.com.

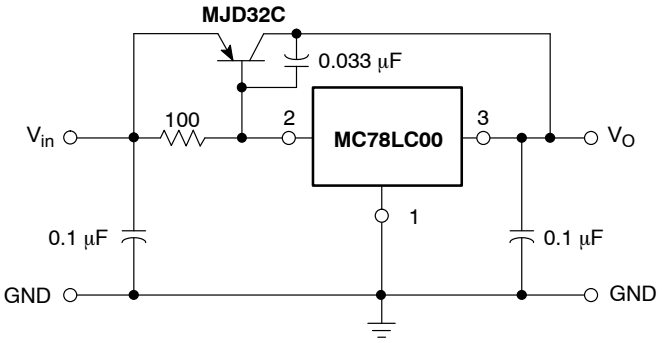

Figure 21. Current Boost Circuit

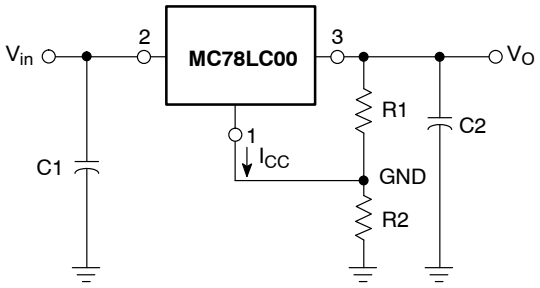

Figure 22. Adjustable V_O

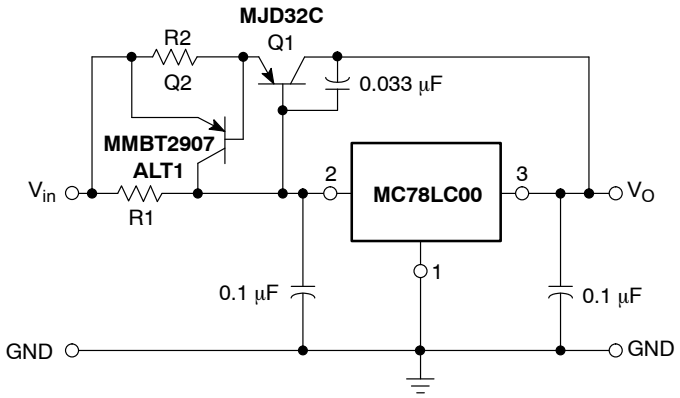

Figure 23. Current Boost Circuit with Overcurrent Limit Circuit

$$V_O = V_{O(Reg)}\left(1 + \frac{R2}{R1}\right) + I_{CC}\,R2$$

$$I_{O(short\ circuit)} \approx \frac{V_{BE2}}{R2} + \frac{V_{BE1} + V_{BE2}}{R1}$$

Downloaded from Arrow.com.

ORDERING INFORMATION

Device	Nominal Output Voltage	Marking	Package	Shipping†
MC78LC18NTRG	1.8	LAH	Thin SOT23−5 (Pb−Free)	3000 Units/7″ Tape & Reel
MC78LC25NTRG	2.5	LAI		
MC78LC30NTRG	3.0	LAL		
MC78LC33NTRG	3.3	LAM		
MC78LC50NTRG	5.0	LAN		

†For information on tape and reel specifications, including part orientation and tape sizes, please refer to our Tape and Reel Packaging Specifications Brochure, BRD8011/D.

Additional voltages in 100 mV steps are available upon request by contacting your **onsemi** representative.

Downloaded from Arrow.com.

SOT−89 (3−LEAD)
CASE 1213−02
ISSUE C

DATE 24 MAY 2001

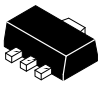

SCALE 2:1

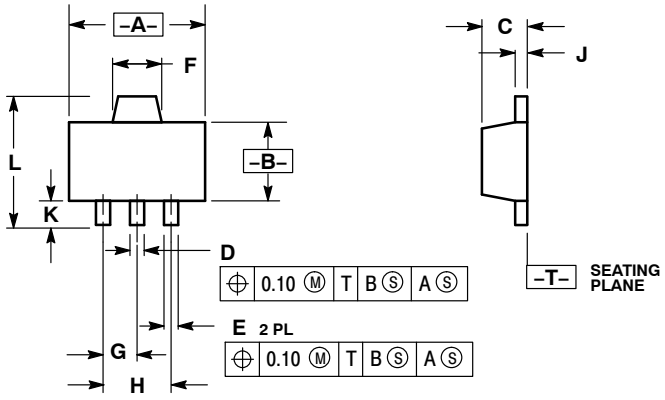

NOTES:
1. DIMENSIONING AND TOLERANCING PER ANSI Y14.5M, 1982.
2. CONTROLLING DIMENSION: MILLIMETERS
3. 1213−01 OBSOLETE, NEW STANDARD 1213−02.

	MILLIMETERS		INCHES	
DIM	MIN	MAX	MIN	MAX
A	4.40	4.60	0.173	0.181
B	2.40	2.60	0.094	0.102
C	1.40	1.60	0.055	0.063
D	0.37	0.57	0.015	0.022
E	0.32	0.52	0.013	0.020
F	1.50	1.83	0.059	0.072
G	1.50 BSC		0.059 BSC	
H	3.00 BSC		0.118 BSC	
J	0.30	0.50	0.012	0.020
K	0.80	---	0.031	---
L	---	4.25	---	0.167

STYLE 1:
PIN 1. EMITTER
2. COLLECTOR
3. BASE

STYLE 2:
PIN 1. BASE
2. COLLECTOR
3. EMITTER

MARKING DIAGRAM

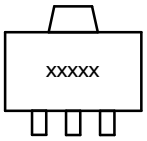

xxxxx = Specific Device Code

DOCUMENT NUMBER:	**98ASH70519A**	Electronic versions are uncontrolled except when accessed directly from the Document Repository. Printed versions are uncontrolled except when stamped "CONTROLLED COPY" in red.
DESCRIPTION:	**SOT−89 (3−LEAD)**	**PAGE 1 OF 1**

onsemi and onsemi are trademarks of Semiconductor Components Industries, LLC dba **onsemi** or its subsidiaries in the United States and/or other countries. **onsemi** reserves the right to make changes without further notice to any products herein. **onsemi** makes no warranty, representation or guarantee regarding the suitability of its products for any particular purpose, nor does **onsemi** assume any liability arising out of the application or use of any product or circuit, and specifically disclaims any and all liability, including without limitation special, consequential or incidental damages. **onsemi** does not convey any license under its patent rights nor the rights of others.

© Semiconductor Components Industries, LLC, 1996

Downloaded from Arrow.com.

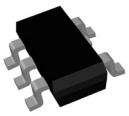

TSOP−5 3.00x1.50x0.95, 0.95P
CASE 483
ISSUE P

DATE 01 APR 2024

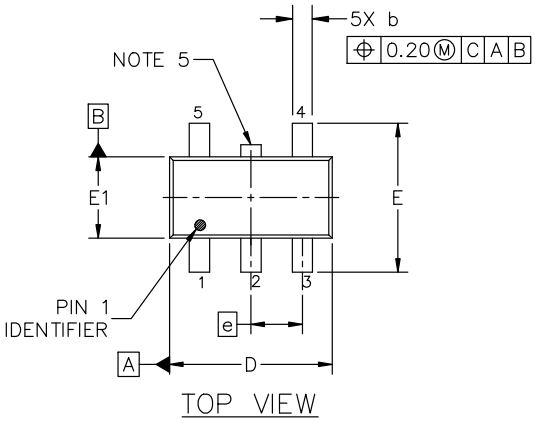

TOP VIEW

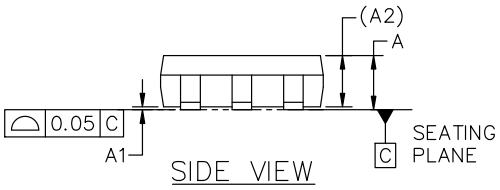

SIDE VIEW

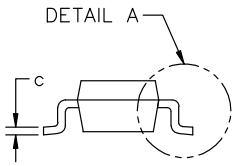

END VIEW

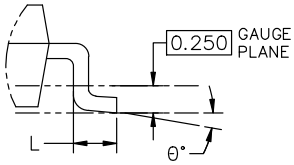

DETAIL "A"
SCALE 2:1

NOTES:

1. DIMENSIONING AND TOLERANCING CONFORM TO ASME Y14.5−2018.
2. ALL DIMENSION ARE IN MILLIMETERS (ANGLES IN DEGREES).
3. MAXIMUM LEAD THICKNESS INCLUDES LEAD FINISH THICKNESS. MINIMUM LEAD THICKNESS IS THE MINIMUM THICKNESS OF BASE MATERIAL.
4. DIMENSIONS D AND E1 DO NOT INCLUDE MOLD FLASH, PROTRUSIONS OF GATE BURRS. MOLD FLASH, PROTRUSIONS, OR GATE BURRS SHALL NOT EXCEED 0.15 PER SIDE. DIMENSION D.
5. OPTIONAL CONSTRUCTION: AN ADDITIONAL TRIMMED LEAD IS ALLOWED IN THIS LOCATION. TRIMMED LEAD NOT TO EXTEND MORE THAN 0.2 FROM BODY.

DIM	MILLIMETERS		
	MIN.	NOM.	MAX.
A	0.900	1.000	1.100
A1	0.010	0.055	0.100
A2		0.950 REF.	
b	0.250	0.375	0.500
c	0.100	0.180	0.260
D	2.850	3.000	3.150
E	2.500	2.750	3.000
E1	1.350	1.500	1.650
e		0.950 BSC	
L	0.200	0.400	0.600
θ	0°	5°	10°

GENERIC
MARKING DIAGRAM*

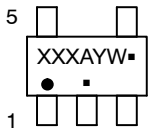

Analog

XXX = Specific Device Code
A = Assembly Location
Y = Year
W = Work Week
▪ = Pb−Free Package

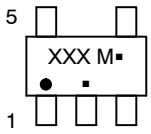

Discrete/Logic

XXX = Specific Device Code
M = Date Code
▪ = Pb−Free Package

(Note: Microdot may be in either location)

*This information is generic. Please refer to device data sheet for actual part marking. Pb−Free indicator, "G" or microdot "▪", may or may not be present. Some products may not follow the Generic Marking.

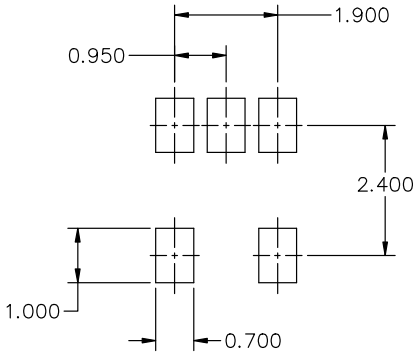

RECOMMENDED MOUNTING FOOTPRINT*

* FOR ADDITIONAL INFORMATION ON OUR Pb−FREE STRATEGY AND SOLDERING DETAILS, PLEASE DOWNLOAD THE ON SEMICONDUCTOR SOLDERING AND MOUNTING TECHNIQUES REFERENCE MANUAL, SOLDERRM/D.

DOCUMENT NUMBER:	**98ARB18753C**	Electronic versions are uncontrolled except when accessed directly from the Document Repository. Printed versions are uncontrolled except when stamped "CONTROLLED COPY" in red.
DESCRIPTION:	**TSOP−5 3.00x1.50x0.95, 0.95P**	**PAGE 1 OF 1**

onsemi and ONSEMI are trademarks of Semiconductor Components Industries, LLC dba **onsemi** or its subsidiaries in the United States and/or other countries. **onsemi** reserves the right to make changes without further notice to any products herein. **onsemi** makes no warranty, representation or guarantee regarding the suitability of its products for any particular purpose, nor does **onsemi** assume any liability arising out of the application or use of any product or circuit, and specifically disclaims any and all liability, including without limitation special, consequential or incidental damages. **onsemi** does not convey any license under its patent rights nor the rights of others.

Downloaded from Arrow.com.

onsemi, ONSEMI , and other names, marks, and brands are registered and/or common law trademarks of Semiconductor Components Industries, LLC dba "**onsemi**" or its affiliates and/or subsidiaries in the United States and/or other countries. **onsemi** owns the rights to a number of patents, trademarks, copyrights, trade secrets, and other intellectual property. A listing of **onsemi**'s product/patent coverage may be accessed at www.onsemi.com/site/pdf/Patent−Marking.pdf. **onsemi** reserves the right to make changes at any time to any products or information herein, without notice. The information herein is provided "as−is" and **onsemi** makes no warranty, representation or guarantee regarding the accuracy of the information, product features, availability, functionality, or suitability of its products for any particular purpose, nor does **onsemi** assume any liability arising out of the application or use of any product or circuit, and specifically disclaims any and all liability, including without limitation special, consequential or incidental damages. Buyer is responsible for its products and applications using **onsemi** products, including compliance with all laws, regulations and safety requirements or standards, regardless of any support or applications information provided by **onsemi**. "Typical" parameters which may be provided in **onsemi** data sheets and/or specifications can and do vary in different applications and actual performance may vary over time. All operating parameters, including "Typicals" must be validated for each customer application by customer's technical experts. **onsemi** does not convey any license under any of its intellectual property rights nor the rights of others. **onsemi** products are not designed, intended, or authorized for use as a critical component in life support systems or any FDA Class 3 medical devices or medical devices with a same or similar classification in a foreign jurisdiction or any devices intended for implantation in the human body. Should Buyer purchase or use **onsemi** products for any such unintended or unauthorized application, Buyer shall indemnify and hold **onsemi** and its officers, employees, subsidiaries, affiliates, and distributors harmless against all claims, costs, damages, and expenses, and reasonable attorney fees arising out of, directly or indirectly, any claim of personal injury or death associated with such unintended or unauthorized use, even if such claim alleges that **onsemi** was negligent regarding the design or manufacture of the part. **onsemi** is an Equal Opportunity/Affirmative Action Employer. This literature is subject to all applicable copyright laws and is not for resale in any manner.

ADDITIONAL INFORMATION

TECHNICAL PUBLICATIONS:
Technical Library: www.onsemi.com/design/resources/technical−documentation
onsemi Website: www.onsemi.com

ONLINE SUPPORT: www.onsemi.com/support
For additional information, please contact your local Sales Representative at www.onsemi.com/support/sales

◊

Downloaded from Arrow.com.