TE CONNECTIVITY (TE) RESERVES THE RIGHT TO CHANGE THIS DRAWING AT ANYTIME. USERS SHOULD EVALUATE THE SUITABILITY OF THE PRODUCT FOR THEIR APPLICATION.

REVISION			
LTR	DESCRIPTION	DATE	APPROVED
B	REVISED PER ECO-08-024758	10/08/2008	M. PIOZET
C	REVISED PER ECO-14-014822	09/29/2014	I. MYONG

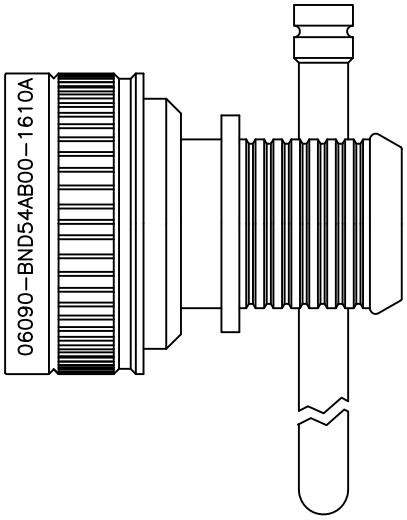

CODE 54 – BAND STRAP ADAPTER

NOTES

1. THIS PRODUCT IS DESIGNED TO TERMINATE A BRAIDED CABLE SHIELD BY MEANS OF A BAND STRAP AND A HEAT SHRINKABLE LIPPED BOOT TO A CONNECTOR.
2. SEE CH00-0250-017 FOR ORDERING INFORMATION, MODIFICATIONS AND ADDITIONAL DIMENSIONS. SEE DRAWING BND-XXXXX FOR BAND STRAP INFORMATION AND DIMENSIONS.
3. ADAPTER TO BE PERMANENTLY MARKED WITH CODE IDENTIFICATION NUMBER AND FULL BASIC PART NUMBER (e.g. 06090-BND54AB00-1812A YYWW) INCLUDING MODIFICATION CODES, EVEN IF A BAND IS NOT SUPPLIED WITH THE ADAPTER.
4. ALL ENTRY SIZES ARE SHOWN IN TABLE II. MAXIMUM ENTRY SIZES ARE AS SHOWN IN TABLE I. FOR LARGER ENTRY SIZES THAN THE MAXIMUM, A TYPE II ADAPTER MAY BE SUPPLIED. SEE CH00-0250-017 FOR FURTHER DETAILS.
5. ADAPTOR MATES TO: SAE-AS81703, SERIES III, MS3424, SAE-AS34461, MS3464, SAE-AS34671, MS3468, CLASSS E AND L CONNECTORS.
6. ADAPTOR MATES TO: SAE-AS50151, MS3400 SERIES, CLASS D, E, K, L, U AND W, MS3400, MS3401, MS3404, MS3406, MS3450, MS3451, MS3454, MS3456, MS3470, MS3471, MS3472, MS3474 MS3475, MS3476. MIL-DTL-83723 SERIES II, CLASS A AND L. MIL-DTL-83723, /14, /36, /37 /38, /39, /40, /41, /42, /43, /48, /49, /65, /66, /67, /68, /69, /70, /71, /72, /73, /74, /75, /76, /77, /78, /82, /83, /84, /85, /86, /87, /91, /92, /95, /97 AND /98 CONNECTORS. (MS3155 CONTROLLED INTERFACES).

©2014 TE CONNECTIVITY LTD. FAMILY OF COMPANIES. ALL RIGHTS RESERVED
TE CONNECTIVITY AND TE CONNECTIVITY (LOGO) ARE TRADEMARKS.
OTHER LOGOS PRODUCT AND/OR COMPANY NAMES MAY BE TRADEMARKS OF THEIR RESPECTIVE OWNERS.

Raychem Adapters
CUSTOMER DRAWING

UNLESS OTHERWISE SPECIFIED DIMENSIONS ARE IN INCHES. REFERENCE METRIC DIMENSIONS ARE IN BRACKETS [metric].	DRAWN: T. NGUYEN	DATE: 09/16/2014	TE Connectivity				
DECIMALS TOLERANCES: XXX ± .005 [0.13mm] XX ± .01 [0.25mm] X ± .1 [0.50mm] ANGLES TOLERANCE: ± 1°	CHECKED: I. MYONG	DATE: 09/23/2014					
	APPROVED: I. MYONG	DATE: 09/25/2014	TITLE: CODE 54 – BAND STRAP ADAPTER				
	MATERIAL: SEE NOTES	FINISH: SEE NOTES					
SCALE: DO NOT SCALE THIS DRAWING	CAD FILE: BND54A.dwg	THIRD ANGLE PROJECTION:	SIZE: A	SHEET: 1 OF 3	CAGE CODE: 06090	DRAWING NO: BND54A	REV. C

Downloaded from Arrow.com.

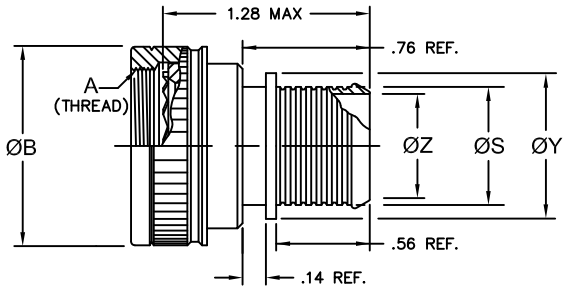

BND54A ADAPTER – TYPE I – STRAIGHT

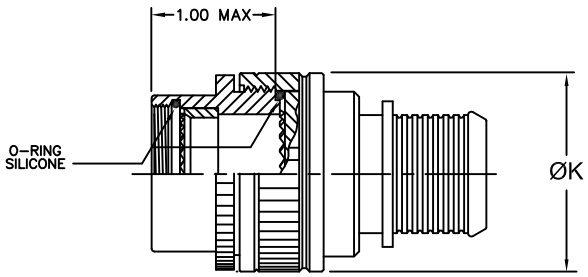

BND54A ADAPTER – TYPE II – STRAIGHT

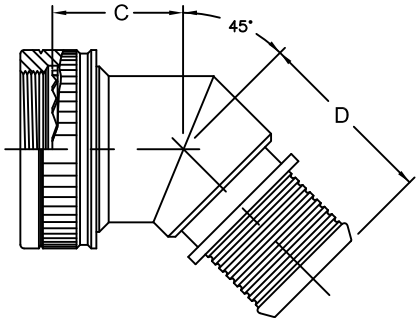

BND54A ADAPTER – TYPE I – 45°

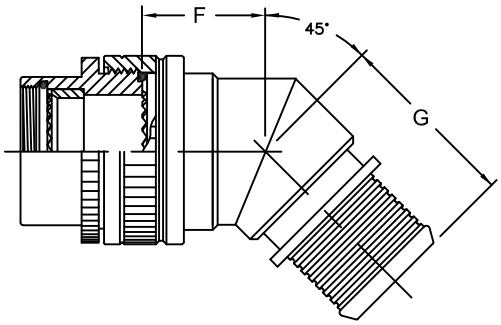

BND54A ADAPTER – TYPE II – 45°

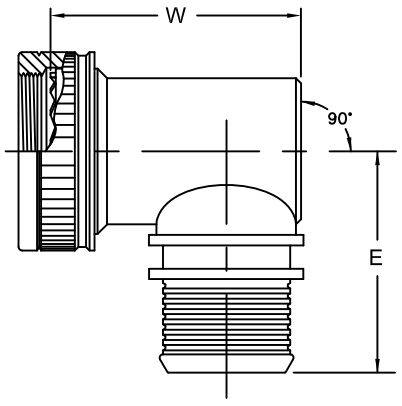

BND54A ADAPTER – TYPE I – 90°

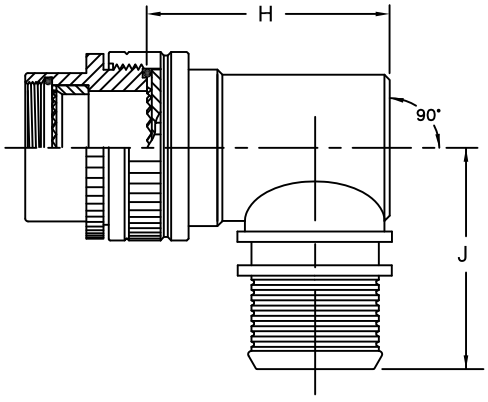

BND54A ADAPTER – TYPE II – 90°

Raychem Adapters
CUSTOMER DRAWING

TE	DO NOT SCALE THIS DRAWING	SIZE A	CAGE 06090	SHEET 2 OF 3	DWG. NO. BND54A	REV C

Downloaded from Arrow.com.

BND54A – TABLE I									
ORDER NO.	SHELL SIZE		A UNIFIED THD. CLASS 2B	ØB MAX.	C MAX.	D MAX.	E MAX.	W MAX.	④ MAX. TYPE I ENTRY
	⑤	⑥							
0 3	3	–	.562–24	.67 [17.1]	.55 [13.9]	1.16 [29.3]	1.29 [32.7]	.83 [20.7]	0 4
0 8	–	8, 8S	.500–20	.62 [15.8]	.55 [13.9]	1.16 [29.3]	1.29 [32.7]	.83 [20.7]	0 4
1 0	–	10, 10S, 10SL	.625–24	.74 [18.8]	.58 [14.6]	1.18 [30.0]	1.32 [33.5]	.95 [23.9]	0 6
1 2	7	12, 12S	.750–24	.86 [21.9]	.60 [15.2]	1.21 [30.6]	1.38 [35.1]	1.08 [27.0]	0 8
1 4	12	14, 14S	.875–20	.99 [25.2]	.62 [15.6]	1.22 [31.0]	1.45 [36.7]	1.14 [28.6]	0 9
1 6	19	16, 16S	1.000–20	1.12 [28.5]	.64 [16.2]	1.25 [31.6]	1.51 [38.3]	1.26 [31.8]	1 0
1 8	27	18	1.062–18	1.22 [31.0]	.65 [16.6]	1.26 [32.0]	1.54 [39.1]	1.33 [33.4]	1 2
2 0	37	20	1.188–18	1.35 [34.3]	.68 [17.2]	1.29 [32.6]	1.60 [40.7]	1.45 [36.6]	1 4
2 2	–	22	1.312–18	1.47 [37.4]	.71 [17.9]	1.31 [33.3]	1.67 [42.3]	1.58 [39.8]	1 6
2 4	–	24	1.438–18	1.60 [40.7]	.73 [18.5]	1.34 [33.9]	1.73 [43.8]	1.70 [42.9]	1 8
2 8	–	28	1.750–18	1.97 [50.1]	.78 [19.9]	1.39 [35.3]	1.88 [47.8]	1.95 [49.3]	2 2
3 2	–	32	2.000–18	2.22 [56.4]	.84 [21.2]	1.44 [36.5]	2.01 [51.0]	2.20 [55.6]	2 4
3 6	–	36	2.250–16	2.47 [62.8]	.86 [21.8]	1.47 [37.2]	2.13 [54.2]	2.33 [58.8]	2 4
4 0	–	40	2.500–16	2.72 [69.1]	.91 [23.1]	1.52 [38.5]	2.26 [57.3]	2.58 [65.2]	2 4
4 4	–	44	2.750–16	2.97 [75.5]	.97 [24.5]	1.57 [39.9]	2.38 [60.5]	2.83 [71.5]	2 4
4 8	–	48	3.000–16	3.22 [81.8]	1.02 [25.8]	1.62 [41.2]	2.51 [63.7]	3.14 [79.5]	2 4
6 1	61	–	1.500–18	1.66 [42.2]	.75 [18.9]	1.35 [34.3]	1.76 [44.6]	1.76 [44.5]	1 8

BND54A – TABLE II								
ENTRY SIZE	ØZ +.010/–.020 [+0.25/–0.51]	ØS ±.015 [±0.38]	ØY +.015 [+0.38]	ØK MAX	F MAX	G MAX	H MAX	J MAX
03	.188 [4.77]	.271 [6.88]	.438 [11.12]	N/A	N/A	N/A	N/A	N/A
04	.250 [6.35]	.334 [8.48]	.500 [12.70]	N/A	N/A	N/A	N/A	N/A
05	.312 [7.92]	.396 [10.06]	.562 [14.27]	.74 [18.8]	.58 [14.6]	1.18 [30.0]	.94 [23.9]	1.32 [33.5]
06	.375 [9.52]	.459 [11.66]	.625 [15.88]	.74 [18.8]	.58 [14.6]	1.18 [30.0]	.94 [23.9]	1.32 [33.5]
07	.438 [11.12]	.521 [13.23]	.688 [17.47]	.86 [21.9]	.60 [15.2]	1.21 [30.6]	1.07 [27.1]	1.38 [35.1]
08	.500 [12.70]	.584 [14.83]	.750 [19.05]	.86 [21.9]	.60 [15.2]	1.21 [30.6]	1.07 [27.1]	1.38 [35.1]
09	.562 [14.27]	.646 [16.41]	.812 [20.62]	.99 [25.2]	.62 [15.6]	1.22 [31.0]	1.13 [28.6]	1.45 [36.7]
10	.625 [15.88]	.709 [18.01]	.875 [22.22]	1.12 [28.5]	.64 [16.2]	1.25 [31.6]	1.25 [31.8]	1.51 [38.3]
12	.750 [19.05]	.834 [21.18]	1.000 [25.40]	1.35 [34.3]	.68 [17.2]	1.29 [32.6]	1.44 [36.6]	1.60 [40.7]
14	.875 [22.22]	.959 [24.36]	1.125 [28.58]	1.35 [34.3]	.68 [17.2]	1.29 [32.6]	1.44 [36.6]	1.60 [40.7]
16	1.000 [25.40]	1.084 [27.53]	1.250 [31.75]	1.60 [40.7]	.73 [18.5]	1.34 [33.9]	1.69 [42.9]	1.73 [43.8]
18	1.125 [28.58]	1.209 [30.71]	1.375 [34.92]	1.60 [40.7]	.73 [18.5]	1.34 [33.9]	1.69 [42.9]	1.73 [43.8]
20	1.250 [31.75]	1.334 [33.88]	1.500 [38.10]	1.97 [50.1]	.78 [19.9]	1.39 [35.3]	1.94 [49.3]	1.88 [47.8]
22	1.375 [34.92]	1.459 [37.06]	1.625 [41.27]	2.22 [56.4]	.84 [21.2]	1.44 [36.5]	2.19 [55.6]	2.01 [51.0]
24	1.500 [38.10]	1.584 [40.23]	1.750 [44.45]	2.22 [56.4]	.84 [21.2]	1.44 [36.5]	2.19 [55.6]	2.01 [51.0]

Raychem Adapters
CUSTOMER DRAWING

TE	DO NOT SCALE THIS DRAWING	SIZE	CAGE	SHEET	DWG. NO.	REV
		A	06090	3 OF 3	BND54A	C

Downloaded from Arrow.com.