CUI Devices is now Same Sky! Learn More

Additional Resources: Product Page

REV.	DESCRIPTION	DATE
A	NEW DRAWING	11/11/2009
B	LOGO, BRAND UPDATE	10/28/2022
C	CUI DEVICES REBRANDED TO SAME SKY	09/12/2024

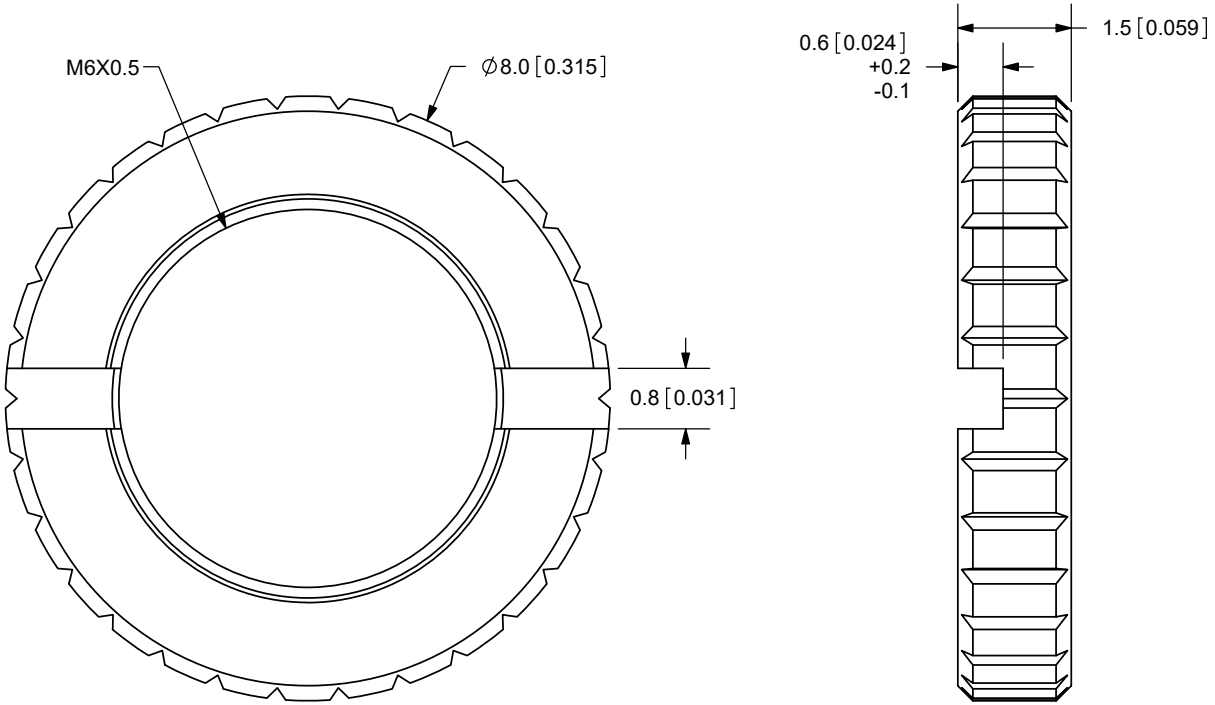

TOLERANCE:
±0.1mm UNLESS OTHERWISE SPECIFIED

RoHS

same sky

6405 SW Rosewood St, Suite C
Lake Oswego, OR 97035
Phone: 877-323-3576

Website: www.sameskydevices.com

TITLE: M6X0.5 NUT	REV: C
PART NO. 3.5mm-nut-e	UNITS: MM [INCHES]

PC FILE NAME:	DRAWN BY:	APPROVED BY:	SCALE:
3.5mm-nut-e	RDS		10:1

	MATERIAL	PLATING	COLOR
NUT	Brass	Nickel	Silver

COPYRIGHT 2024 BY SAME SKY

Downloaded from Arrow.com.