Product data sheet

Specifications



Complete pilot light, Harmony XB6, round red, plastic, 16mm, integral LED 12...24V

XB6AV4BB

Main

Range of product	Harmony XB6
Product or component type	Complete pilot light
Device short name	XB6
Bezel material	Plastic
Mounting diameter	16 mm
Sale per indivisible quantity	1
Shape of signaling unit head	Round
Cap/operator or lens colour	Red
Light source	LED
Bulb base	Integral LED
Light block supply	Direct
[Us] rated supply voltage	12...24 V AC/DC

Complementary

Height	18 mm
Width	18 mm
Depth	57 mm
Terminals description ISO n°1	(+ -)PL
Product weight	0.015 kg
Operating position	Any position
Connections - terminals	Faston connectors, connection size: 2.8 x 0.5 mm
[Ui] rated insulation voltage	250 V (pollution degree 2) conforming to IEC 60947-1
[Uimp] rated impulse withstand voltage	4 kV conforming to IEC 60947-1
Signalling type	Steady
Supply voltage limits	6…30 V AC/DC
Current consumption	15 mA
Surge withstand	1 kV direct contact conforming to IEC 61000-4-5 2 kV in free air conforming to IEC 61000-4-5

Environment

Protective treatment	TC
Ambient air temperature for storage	-40…70 °C

Disclaimer: This documentation is not intended as a substitute for and is not to be used for determining suitability or reliability of these products for specific user applications

Downloaded from Arrow.com.

Ambient air temperature for operation	-25…70 °C
Electrical shock protection class	Class II conforming to IEC 61140
IP degree of protection	IP65 conforming to IEC 60529
NEMA degree of protection	NEMA 13 conforming to UL 50 NEMA 4 conforming to UL 50 NEMA 4X conforming to UL 50 NEMA 13 conforming to CSA C22.2 No 94 NEMA 4 conforming to CSA C22.2 No 94 NEMA 4X conforming to CSA C22.2 No 94
Standards	IEC 60947-5-1 CSA C22.2 No 14 JIS C 852 UL 508 IEC 60947-1 JIS C8201-5-1 IEC 60947-5-5 JIS C8201-1
Product certifications	GOST CSA CCC UL
Vibration resistance	+/- 3 mm (f= 2…500 Hz) conforming to IEC 60068-2-6 5 gn (f= 2…500 Hz) conforming to IEC 60068-2-6
Shock resistance	30 gn (duration = 18 ms) for half sine wave acceleration conforming to IEC 60068-2-27 50 gn (duration = 11 ms) for half sine wave acceleration conforming to IEC 60068-2-27
Resistance to fast transients	2 kV conforming to IEC 61000-4-4
Resistance to electromagnetic fields	10 V/m conforming to IEC 61000-4-3
Resistance to electrostatic discharge	6 kV on contact (on metal parts) conforming to IEC 61000-4-2 8 kV in free air (in insulating parts) conforming to IEC 61000-4-2
Electromagnetic emission	Class B conforming to IEC 55011

Packing Units

Unit Type of Package 1	PCE
Number of Units in Package 1	1
Package 1 Height	6.300 cm
Package 1 Width	4.700 cm
Package 1 Length	5.700 cm
Package 1 Weight	16.000 g
Unit Type of Package 2	S02
Number of Units in Package 2	75
Package 2 Height	15.000 cm
Package 2 Width	30.000 cm
Package 2 Length	40.000 cm
Package 2 Weight	1.574 kg

Contractual warranty

Warranty (in months)	18

Downloaded from Arrow.com.

Environmental Data

Schneider Electric aims to achieve Net Zero status by 2050 through supply chain partnerships, lower impact materials, and circularity via our ongoing “Use Better, Use Longer, Use Again” campaign to extend product lifetimes and recyclability.

Environmental Data explained >

How we assess product sustainability >

Environmental footprint

Total lifecycle Carbon footprint	**0.6 kg CO2 eq.**
Carbon footprint of the manufacturing phase [A1 to A3]	**0.3 kg CO2 eq.**
Carbon footprint of the distribution phase [A4]	**0 kg CO2 eq.**
Carbon footprint of the installation phase [A5]	**0 kg CO2 eq.**
Carbon footprint of the use phase [B2, B3, B4, B6]	**0.3 kg CO2 eq.**
Carbon footprint of the end-of-life phase [C1 to C4]	**0 kg CO2 eq.**
Environmental Disclosure	Product Environmental Profile

Use Better

Materials and Substances

Packaging made with recycled cardboard	**Yes**
Packaging without single use plastic	**No**
SCIP Number	**902182a2-9610-45f2-840e-6da530122efe**
EU RoHS Directive	Compliant By Exemption
REACh Regulation	Reference contains Substances of Very High Concern above the threshold

Use Longer

Lifetime extension

Repair	**No**

Use Again

Repack and remanufacture

Recyclability potential, in %	**14**
End of life manual availability	End of Life Information
Take-back	**No**
WEEE Label	**The product must be disposed on European Union markets following specific waste collection and never end up in rubbish bins**

Downloaded from Arrow.com.

Dimensions Drawings

Circular Head Pilot Light

Dimensions

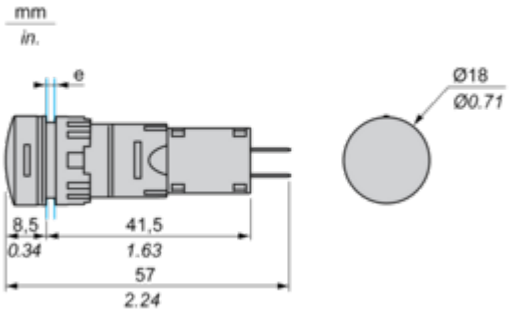

e panel thickness 1 to 6 mm/0.03 to 0.23 in.

Downloaded from Arrow.com.

Mounting and Clearance

Panel Cut-out

For Square or Circular Head

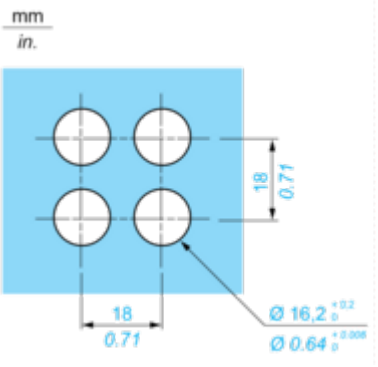

Downloaded from Arrow.com.

Image of product / Alternate images

Alternative





Downloaded from Arrow.com.

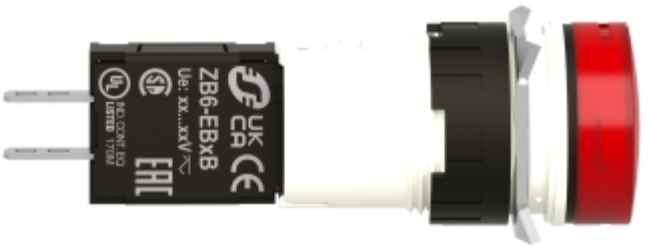



Downloaded from Arrow.com.



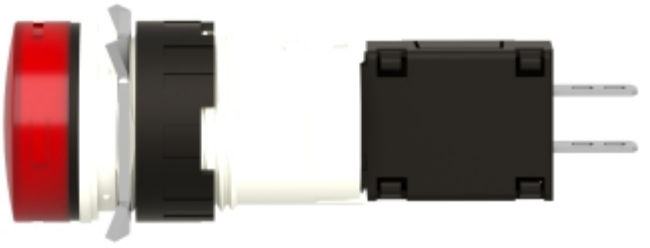

Downloaded from Arrow.com.