CLIFF

ISS.	AMEND	DATE
1	ISSUED	06/07/09
2	MATERIAL WAS PA6	03/12/19

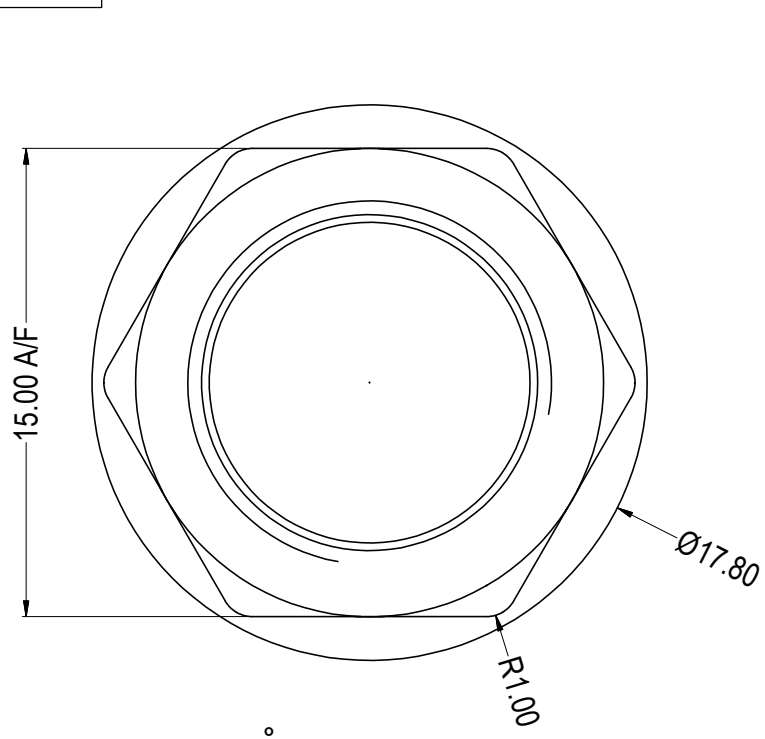

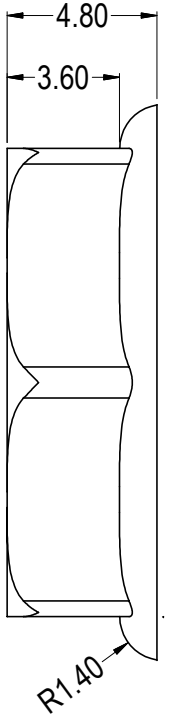

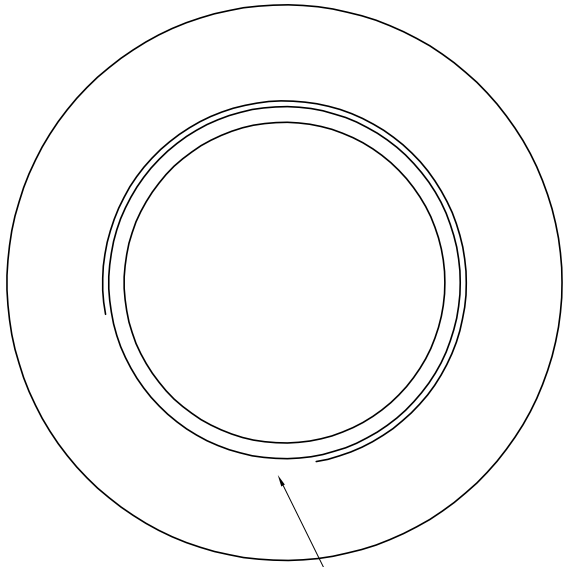

RECESS (3x) PERMISSABLE TO PREVENT PART ROTATING ON EJECTION. (NOT SHOWN)

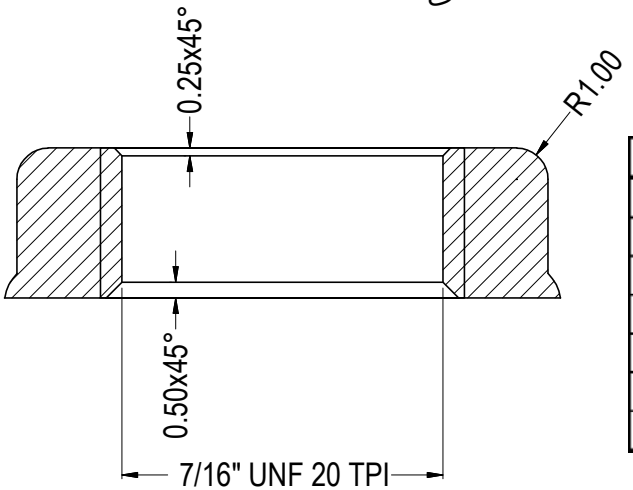

PART NO.	COLOUR
CL1408	BLACK
CL1409	WHITE
CL1410	GREY
CL1412	BLUE
CL1414	GREEN
CL1416	RED
CL1420	YELLOW

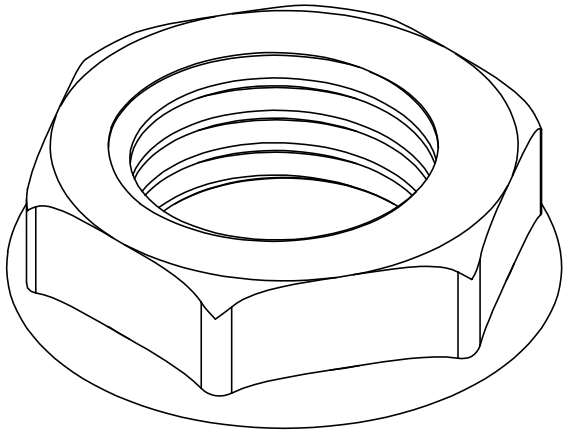

NOTE: TO BE FREE FROM SINK AND FLASH

RoHS COMPLIANT

TOLERANCE
NO DEC. PLACE ± 0.50
1 DEC. PLACE ± 0.20
2 DEC. PLACE ± 0.10
HOLE Ø ± 0.10
ANGLES ± 1/2°
UNLESS OTHERWISE STATED

Cliff Electronic Components Ltd.
76 Holmethorpe Avenue, Holmethorpe Industrial Estate,
Redhill, Surrey, RH1 2PF, England, UK
Tel: 01737-771375 Fax: 01737-766012 Website: www.cliffuk.co.uk

THE CONTENTS OF THIS DOCUMENT MUST NOT BE COPIED OR DISCLOSED TO A 3rd PARTY WITHOUT WRITTEN PERMISSION OF CLIFF UK. © 2009

DIMENSIONS IN MILLIMETERS UNLESS OTHERWISE STATED. WORK TO DIMENSIONS. REMOVE ALL BURRS. IF IN DOUBT ASK. | 3rd ANGLE PROJECTION: | DO NOT SCALE

MATERIAL: NYLON 66 - SEE TABLE FOR COLOUR VARIANTS

FINISH: LIGHT SPARK 27 VDI

DRAWN: T.J.O. | APPROVED: D.P.J.

TITLE: S2 NUT - UK

DRWG. No. CL1408 | FORM: A4DRWGH

Downloaded from Arrow.com.