Glenair®

BAYONET-LOCK CONNECTORS

IPT SERIES

HIGH-DENSITY MIL-DTL-26482 SERIES I CONNECTORS
VG95328 QUALIFIED
FOR RUGGED MILITARY AND INDUSTRIAL APPLICATIONS

JUNE 2015

▪ United Kingdom ▪ Germany ▪ France ▪ Nordic ▪ Italy ▪ Spain ▪ Japan

Downloaded from Arrow.com.

ETHERNET DATA

OCTOBYTE™

THE FASTER 4/8 POLE INTERCONNECTION SYSTEM FOR ETHERNET DATA IN EVERY APPLICATIONS

ITH connector with **OCTOBYTE™** contacts is available with fully dedicated ETHERNET protocol or in a combo version where a mix of signal-power and Ethernet is required. RoHS compliant, IP67 (IP68 on request) exceeds performance expections typical in harsh environmental applications found throughout Rail and Industrial markets. **OCTOBYTE™** contacts are vibration resistant and available to work with ETHERNET cables from CAT 5 to CAT 7A, MVB-WTB, RG58 Coax.

Octobyte

Glenair®

GLENAIR, INC. • 1211 Air Way • Glendale, CA 91201-2497 • Tel: 818-247-6000 • Email: sales@glenair.com • www.glenair.com

Downloaded from Arrow.com.

Introduction
IPT and IPT SE product features and specifications

IPT-SE Series
High Performance Crimp Contact MIL-DTL-26482 Serie I Bayonet Connector

IPT Series
General Duty Solder and Crimp Contact MIL-DTL-26482 Serie I Bayonet Connector

Connector Accessories and Tools

Product Index
Complete Listing of Catalog Pages and Part Number Index

A
B
C
D
E

© 2015 Glenair, Inc.
U.S. CAGE Code 06324
Printed in Italy

GLENAIR, INC. • 1211 AIR WAY • GLENDALE, CA 91201-2497 • 818-247-6000 • FAX 818-500-9912
www.glenair.com
E-Mail: sales@glenair.com

Downloaded from Arrow.com.

Glenair IPT and IPT-SE Series
MIL-DTL-26482 Serie I Bayonet Connectors
Summary of Connector Styles and Backshells

Glenair IPT and IPT SE series connectors offer rugged, high vibration performance and rapid mating for both high-performance and general duty signal connector applications. The products are environmentally sealed and can be equipped with EMI/RFI shield termination backshell accessories. IPT SE is qualified to VG 95328. Both product series are in accordance with MIL-DTL-26482 Serie I.

IPT-SE AND IPT PRODUCT FEATURES AND SPECIFICATIONS

Feature	Description
Applications	Factory equipment, off-road vehicles, military vehicles, sensors, power generators, and other industrial applications.
Shell Construction	Aluminum shell bodies provide durable performance in a lightweight package.
Mating System	Three pin bayonet system, 1/2 turn to full mate.
Shell Surface Coatings	A range of conductive and non-conductive surface coatings including standard Cadmium finishes as well as RoHS compliant elecrostatic paint.
Environmental Sealing	Individual wire sealing grommets and optional environmental backshells provide moisture protection up to IP67.
Temperature Tolerance	F6, F7, F11 and G3 plated connectors are tested to -55°C to 125°C.
Contacts	High performance crimp contacts and retention clips (IPT SE) and general duty crimp and solder contacts (IPT).
Contact Plating	Copper alloy with gold plating.
Wire Gauge	Contacts support wire sizes #12 - #14 (Size 12), #16 - #20 gauge (Size 16) and #20 - #24 (size 20).
Insert Materials	Resilient high-insulation synthetic insert (polychloroprene or silicone). IPT SE version includes hard plastic retention clip retainer.
Insert Arrangements	IPT SE: 25 different power and signal insert arrangements, featuring 16 and 20 gauge contacts; 3 to 61 contacts. IPT: 39 different power and signal insert arrangements, featuring 12, 16 and 20 gauge contacts; 2 to 61 contacts.
EMI Shielding	Shield termination backshell accessories are available for all plug and receptacle configurations.
Shell Styles	Complete range of shell styles is available, including front and rear mount flange receptacles, jam nut receptacles, bulkhead feedthrus, and straight and 90° plugs.
Polarization	5 keyway configuration with optional polarization.
Approvals	IPT SE is qualified to VG 95328. Both IPT and IPT SE meet all requirements of MIL-DTL-26482 Serie I.
Intermateability	Intermateable with all industry standard bayonet connectors designed to MIL-DTL-26482 Serie I and VG 95328 including Veam VPT, Amphenol PT and ITT Cannon KPT.

© 2015 Glenair, Inc. U.S. CAGE Code 06324 Printed in Italy

Downloaded from Arrow.com.

Glenair®

SEACROW™ Connectors

Marine Bronze Connectors for Harsh Environmental Applications

Downloaded from Arrow.com.

SEACROW™ Connectors

NO MINS. No Dollar or Quantity Minimum Orders

Marine Bronze Connectors for Harsh Environmental Applications

Shipboard Application

Glenair manufactures connectors qualified to V96929, VG95234 and VG95328 standards. These connectors are mostly used in harsh-environment military applications for ground vehicles and ground systems. Our new Marine Bronze version increases the level of robustness of these connectors to be succesfully used in all severe environment navy installations, as well as off-shore platforms, sea ports, geological and oceanographic applications.

Navy Application

SEACROW™ Connector Series are Manufactured in Italy by GLENAIR ITALIA S.p.A.

Downloaded from Arrow.com.

IPT SE Series

High Performance Crimp Contact MIL-DTL-26482
Serie I Bayonet Connector

Section B

B

High Performance Crimp Contact **Bayonet-Lock Signal Connectors (MIL-DTL-26482 Serie I)**	**B-2**
High Performance Crimp Contact (MIL-DTL-26482 Serie I) **Styles and Classes**	**B-3 ; B-4**
Technical data	**B-5**
How to Order • Part Number Breakdown	**B-6**
VG95328 Part Number Cross Reference	**B-7**
Materials and Finishes	**B-8**
Pin and Socket Crimp Contact Dimensions	**B-9**
Insert Arrangement Tables and Sealing Plugs	**B-10**
Available Insert Arrangements	**B-11 ; B12**
Fastener Height Requirements and Panel Cutout Dimensions	**B-13**
IPT SE Connectors Configurations	**B-14 ; B-63**

© 2015 Glenair, Inc. U.S. CAGE Code 06324 Printed in Italy

Downloaded from Arrow.com.

IPT SE Brings High-Performance Crimp Contact Termination to MIL-DTL-26482 Serie I Bayonet Connectors

Harsh Application Environments

The Glenair Series IPT SE Bayonet-Lock Signal Connector is ideally suited for all general and environmental applications that require a high-performance military type cylindrical connector with crimp-removable contacts. Qualified to VG95328, the bayonet mechanism provides fast and easy coupling, especially when the connector is situated in an awkward or hard to reach location.

Environmental protection to IP67 levels provides additional reliability and the flexibility to specify these rugged connectors in harsh applications such as in machine tools and factory automation. Supplied crimp contacts are gold-plated copper alloy. Inserts are made from high-insulation synthetic rubber, oil and temperature resistant from -55° C to +125° C (polychloroprene) to +200° C (silicone).

Intermateability

The Series IPT SE Connector is interchangeable and intermateable with the wide range of industry-standard bayonet connectors designed around MIL-DTL-26482 Serie I and/or qualified to VG 95328, including ITT Cannon KPT.

Main Technical Characteristics

High Performance Crimp Version with Contact Retention Clips and Sealed Inserts—2 Contact Sizes: #20 and #16.

21 Signal Contact Insert Arrangements, 3 to 61 Contacts

Rear-Insertion/Front Release Snap-In Contacts

Intermateable with Other MIL-DTL-26482 Serie I Products

Ruggedized Contact Retention Clip

Environmentally Sealed System

Audible and Visual Coupling Indicators

Keyed Polarization

© 2015 Glenair, Inc. U.S. CAGE Code 06324 Printed in Italy

Downloaded from Arrow.com.

Styles and Classes

ASE: For general-duty applications. This connector-backshell assembly is supplied with a general-duty backshell for the attachment of additional accessories such as MS 3057 cable clamps (ordered separately). Individual wire sealing grommet supplied.

SE: For general-duty environmental applications using unjacketed wire bundles. Additional environmental sealing is provided through an individual wire sealing grommet in the connector and an overall cable grommet seal in the backshell. No cable clamp supplied.

ASE...N0: Wall mounting/In-line receptacle and plug with accessory threads in the rear for the backshell and accessories attachment; through mounting holes.

SE...SR: Same as class SE, but with cable clamp and bushing for strain-relief.

GSE: Plug with straight backshell for heatshrink boot.

MSE: Plug with backshell for EMI shield termination and/or heatshrink boot for Shell Styles IPT00, IPT01, IPT06 and IPT07.

The Glenair IPT SE miniature bayonet-lock connector series features a 3 point bayonet coupling mating interface with stainless steel coupling pins for advanced durability. Resilient inserts provide outstanding dielectric performance and environmental protection. Individual wire sealing grommets elevate the environmental protection rating to IP67.

© 2015 Glenair, Inc. U.S. CAGE Code 06324 Printed in Italy

Downloaded from Arrow.com.

Glenair IPT SE Series Bayonet-Lock
High Performance Crimp Contact (MIL-DTL-26482 Serie I)
Styles and Classes

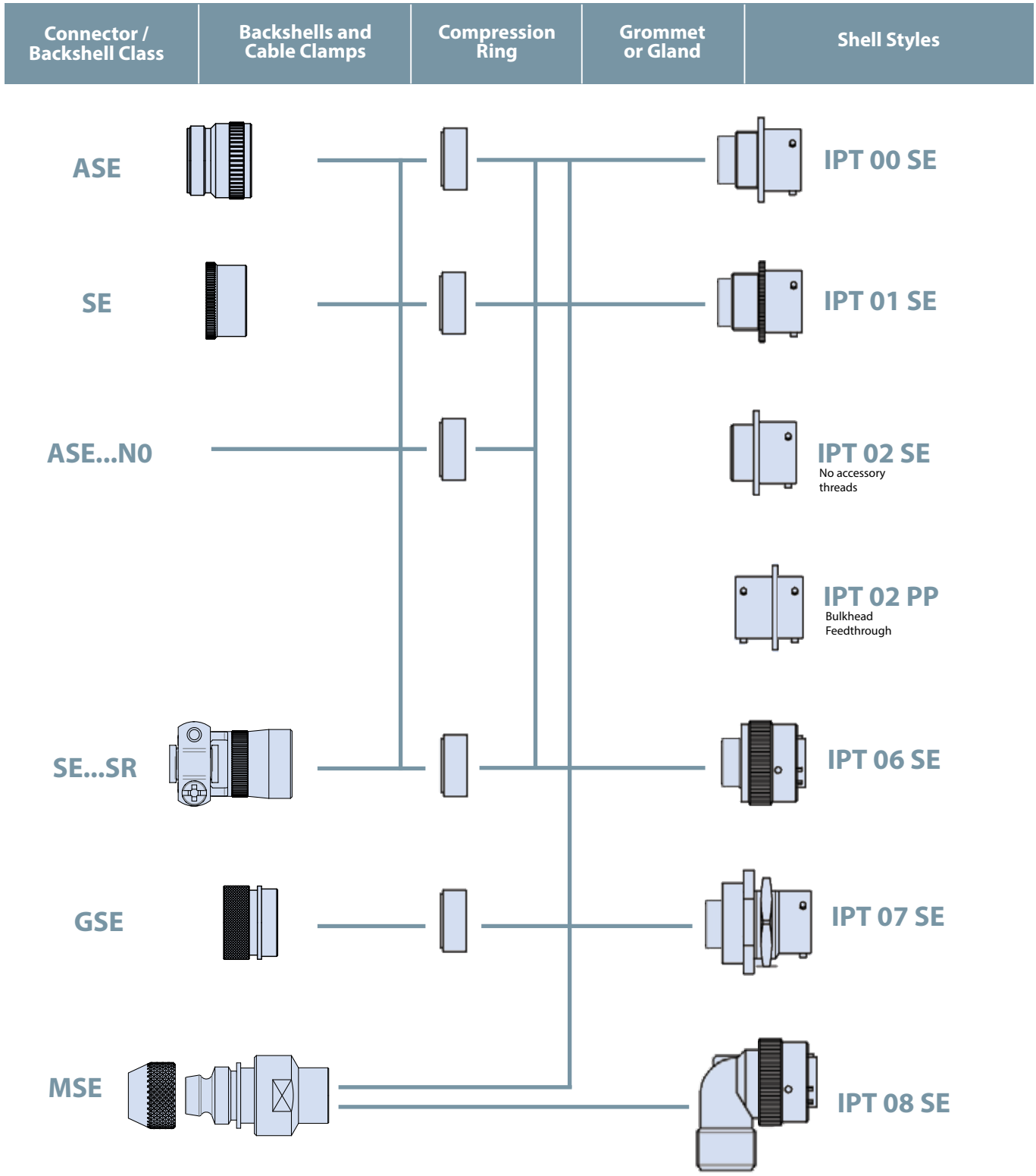

© 2015 Glenair, Inc. U.S. CAGE Code 06324 Printed in Italy

GLENAIR, INC. • 1211 AIR WAY • GLENDALE, CA 91201-2497 • 818-247-6000 • FAX 818-500-9912
www.glenair.com E-Mail: sales@glenair.com

Downloaded from Arrow.com.

Service Rating			
Class	Operating voltage AC	Operating voltage DC	Test voltage AC
I	600	700	1500
II	1000	1250	2300

Potential Drop		
Contact size	Test current	Potential drop
20	7.5 A	25 mV
16	13.0 A	21 mV

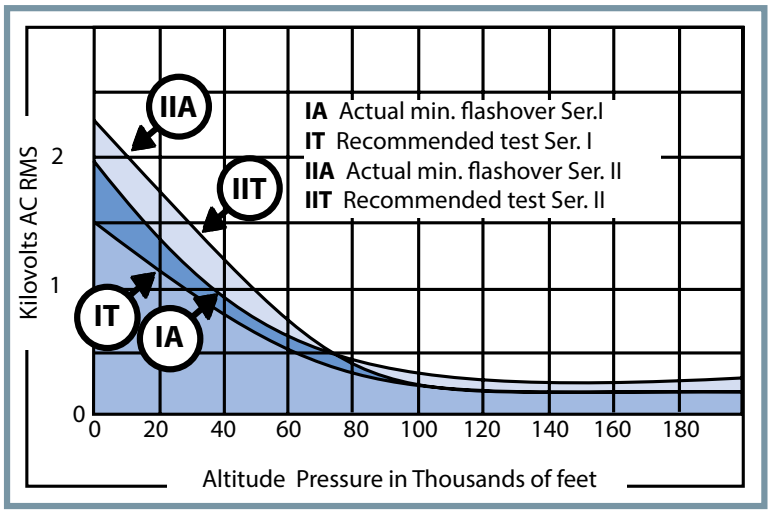

© 2015 Glenair, Inc.

Downloaded from Arrow.com.

Glenair IPT SE Series Bayonet-Lock High Performance Crimp Contact (MIL-DTL-26482 Serie I)

How to Order • Part Number Breakdown

Connector Shell Styles

00 *- Wall Mounting Receptacle with Accessory Threads*

01 *- In-Line Cable Connector with Accessory Threads*

02 *- Box Mounting Receptacle with No Accessory Threads*

02PP *- Through Bulkhead Receptacle*

06 *- Straight Plug Connector with Accessory Threads*

07 *- Rear Box Mount Jam Nut Receptacle*

08 *- 90° Backshell*

Shell Size and Insert Arrangement

Mod Code Options

F6 *- Black Electro-deposited Paint (RoHs)*

F7 *- Black Zn-Ni Plating (RoHs)*

F11 *- Electroless Nickel (RoHs)*

MB *- Marine Bronze (RoHs)*

(Omit for Standard Finish - Cad/Olive Drab-Not RoHS)

Contact Gender

P *- Pin*

S *- Socket*

Alternate Insert Rotation

Omit for Normal

Polychloroprene Insert

IPT	G	06	SE	18-11	P	X	SR	XX

SIPT

Silicone Insert

Environmental Class

ASE - SE - SE...SR - GSE - MSE

Indicates that the Supplied Connector/Backshell Assembly includes a Wire Sealing Grommet.

ASE...NO

Indicates that the Supplied Connector, without Backshell, includes a Wire Sealing Grommet.

Plug Grounding Fingers

Omit for Standard

Accessory Description*

SR *- Cable Clamp and Bushing*

****Not Used When Environmental Class Code Incorporates the Backshell Description—See Individual Catalog Pages for Details***

© 2015 Glenair, Inc. U.S. CAGE Code 06324 Printed in Italy

Downloaded from Arrow.com.

VG95328 Part Number Cross Reference

Glenair®

Basic Part Number — **VG95328**

Connector style — **A**

Contact Arrangement — **18-11**

P - Pin contacts
S - Socket contacts
Omit - For Style P Bulkhead Feed Thrus

Alternate Insert Positions — **S**

N - W - X - Y - Z — **N**

Cross Reference		
VG95328 Connectors	MS	GLENAIR
VG95328 A	MS 3120 E	IPT 00 SE
VG95328 B	MS 3120 F	IPT 00 SE … SR
VG95328 C	MS 3122 E	IPT 02 SE
VG95328 D	MS 3124 E	IPT 07 SE
VG95328 E	MS 3124 F	IPT 07 SE … SR
VG95328 F	N.A.	N. A.
VG95328 G	N.A.	N. A.
VG95328 H	MS 3112 E	IPT 02 E
VG95328 J	N.A.	IPT 06 GSE
VG95328 K	MS 3126 F	IPT 06 SE … SR
VG95328 L	N.A.	N. A.
VG95328 M	N.A.	IPT G 06 MSE
VG95328 N	N.A.	IPT G 06 ASE
VG95328 P	MS 3119 E	IPT 02 PP
VG95328 R	N.A.	IPT 00 MSE
VG95328 S	N.A.	IPT 07 GSE
VG95328 T	N.A.	IPT 07 MSE
VG95328 U	N.A.	N. A.
VG95328 V	N.A.	IPT G 06 GSE
VG95328 W	N.A.	N. A.

Cross Reference		
VG95328 Accessories	MS	GLENAIR
VG95328 Z1 A	MS 3181 C	IPT 3181 C
VG95328 Z1 B	N.A.	IPT 3181 CF
VG95328 Z1 C	N.A.	N. A.
VG95328 Z2 A	MS 3180 C	IPT 3180 C
VG95328 Z2 B	N.A.	IPT 3180 CF
VG95328 Z2 C	N.A.	N. A.
VG95328 Z3 C	N.A.	IPT 3181 NF
VG95328 T07 A	N.A.	10-101949
VG95328 T07 B	N.A.	N. A.
VG95328 T07 C	MS 3115	IPT 3115
VG95328 T07 D	N.A.	N. A.

© 2015 Glenair, Inc. U.S. CAGE Code 06324 Printed in Italy

Downloaded from Arrow.com.

Glenair IPT SE Series Bayonet-Lock High Performance Crimp Contact (MIL-DTL-26482 Serie I)

Materials and Finishes

MATERIALS	
COMPONENT	**MATERIAL**
Shells	Aluminum Alloy IAW QQ-A-591 Shells Stainless Steel Coupling Pins Stainless Steel Spring
Inserts (Temperature Range)	High Insulation Synthetic Rubber (Polychloroprene): -55°C/+125°C (Silicone): -55°C/+200°C
Contacts	Copper Alloy with Gold Plating Over Nickel

STANDARD MATERIAL & FINISH OPTIONS					
Property	**RoHS**				**Not RoHS**
	Alum/Black Non Conductive	**Alum/Black Conductive**	**Alum/Electroless Nickel**	**Unplated/Marine Bronze**	**Alum/Cadmium Olive Drab**
	F6	**F7**	**F11**	**MB**	**G3**
Temperature Range	-55°C + 200°C	-55°C + 175°C	-55°C + 200°C	-55°C + 200°C	-55°C + 175°C
Salt Spray Hours	500	500	48	1000	500
Electical Conductivity	NO	Very Good	Very Good	Very Good	Very Good

TABLE II: MODIFICATION CODES

CONTACT OPTIONS	
Sym	**Description**
B0	Connector Without Contacts (Only for crimp version)
FINISH OPTIONS	
Sym	**Description and RoHS compliant**
F6	Black Electrodeposited Paint
F7	Black Zinc Nickel
F11	Electroless Nickel
MB	Marine Bronze
Omit for standard version (Cadmium Olive Drab Finish)	

Conductive metal shells and plating provide a reliable ground plane for EMI applications when connectors are combined with appropriate shield termination backshells. Ground springs are also available in plug versions to further enhance EMC. Shells are keyed with five total alternate key positions. Inserts may also be clocked for additional polarization protection. The connectors are temperature rated from -55°C to +125°C / +200°C. High performance crimp contacts facilitate rapid assembly and repair.

© 2015 Glenair, Inc. U.S. CAGE Code 06324 Printed in Italy

Downloaded from Arrow.com.

Crimp Contact Dimensions
Pin and Socket

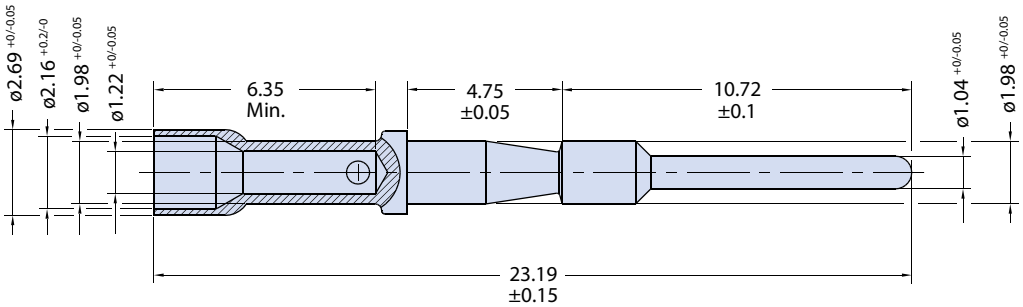

Size 20 Pin Contact
10-314980-20P

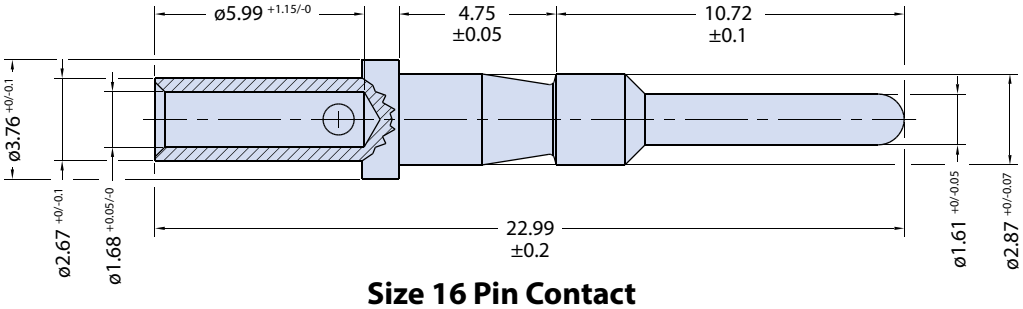

Size 16 Pin Contact
10-314980-16P

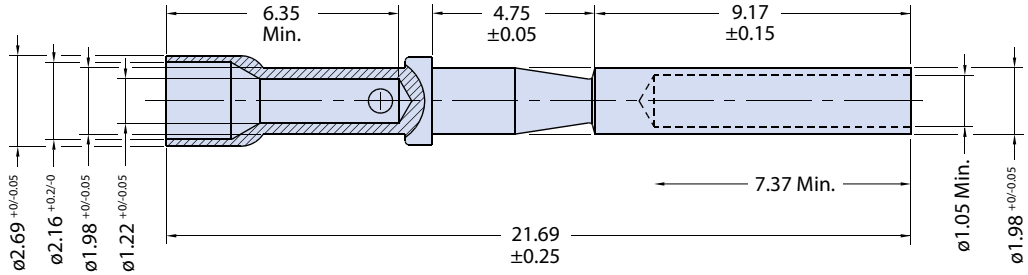

Size 20 Socket Contact
10-314980-20S

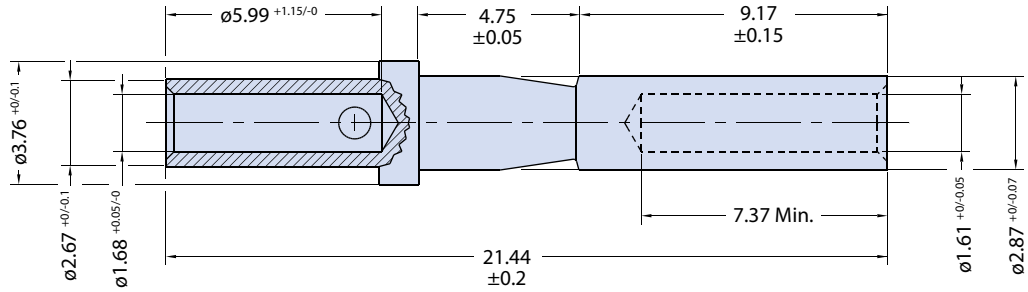

Size 16 Socket Contact
10-314980-16S

For crimp tools see page D-13

© 2015 Glenair, Inc. U.S. CAGE Code 06324 Printed in Italy

Downloaded from Arrow.com.

Glenair IPT SE Series
Insert Arrangement Tables and Sealing Plugs

Sealing Plugs for Socket Cavity

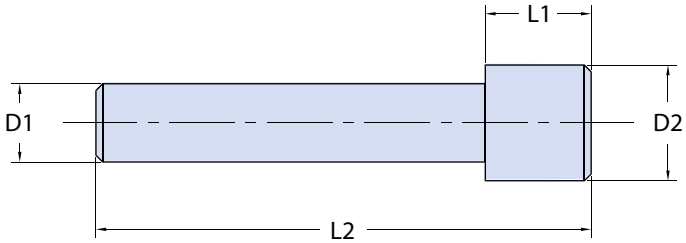

SEALING PLUG DIMENSIONS					
Part Number	D1 ±0.1	D2 ±0.2	L1 ±0.1	L2 ±0.3	Color
DIN 65194-20	1.62	2.3	3.5	14.5	Red
DIN 65194-16	2.30	3.4	3.1	14.5	Blue

Insert Arrangement Tables

Arrangement	Cl. Isol. Rating	Dim. contact size	
		20	16
8 - 3A	I	3	
8-33	I	3	
10 - 6	I	6	
10 - 7	I	7	
12 - 3	II		3
12 - 10	I	10	
14 - 5	II		5
14 - 12	I	8	4
14 - 15	I	14	1
14 - 19	I	19	
16 - 8	II		8
16 - 23	I	22	1
16 - 26	I	26	
18 - 11	II		11
18 - 32	I	32	
20 - 16	II		16
20 - 39	I	37	2
20 - 41	I	41	
22 - 21	II		21
22 - 55	I	55	
24 - 61	I	61	

Arrangement	Degrees			
	W	X	Y	Z
8 - 3A	60	210[a]		
8-33	90			
10 - 6	90			
10 - 7	90			
12 - 3			180	
12 - 10	60	155	270	295
14 - 5	40	92	184	273
14 - 12	43	90		
14 - 15	17	110	155	234
14 - 19	30	165	315	
16 - 8	54	152	180	331
16 - 23	158			
16 - 26	60		275	338
18 - 11	62	119	241	340
18 - 32	85	138	222	265
20 - 16	238	318	333	347
20 - 39	63	144	252	333
20 - 41	45	126	225	
22 - 21	16	135	175	349
22 - 55	30	142	226	314
24 - 61	90	180	270	324

[a] Not for new design

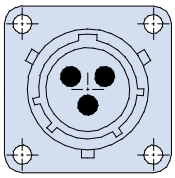

Normal Position

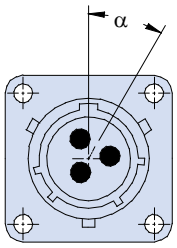

Alternate Position with Pin Contacts

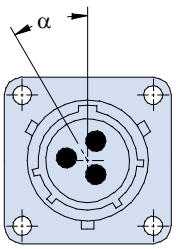

Alternate Position with Socket Contacts

© 2015 Glenair, Inc.

GLENAIR, INC. • 1211 AIR WAY • GLENDALE, CA 91201-2497 • 818-247-6000 • FAX 818-500-9912
www.glenair.com
E-Mail: sales@glenair.com

Downloaded from Arrow.com.

Glenair IPT SE Series
Available Insert Arrangements

3 Contacts

Arrangement:	8-3A	8-33	12-3
Contact Size:	20	20	16
Service Rating:	I	I	II

5 Contacts

Arrangement:	14-5
Contact Size:	16
Service Rating:	II

6 Contacts

Arrangement:	10-6
Contact Size:	20
Service Rating:	I

7 Contacts

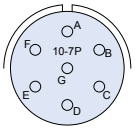

Arrangement:	10-7
Contact Size:	20
Service Rating:	I

8 Contacts

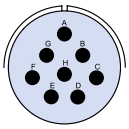

Arrangement:	16-8
Contact Size:	16
Service Rating:	II

10 Contacts

Arrangement:	12-10
Contact Size:	20
Service Rating:	I

11 Contacts

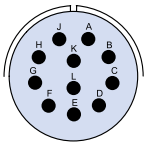

Arrangement:	18-11
Contact Size:	16
Service Rating:	II

12 Contacts

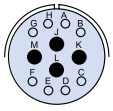

Arrangement:	14-12
Contact Size:	8-20, 4-16
Service Rating:	I

15 Contacts

Arrangement:	14-15
Contact Size:	14-20, 1-16
Service Rating:	I

16 Contacts

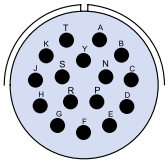

Arrangement:	20-16
Contact Size:	16
Service Rating:	II

Contact Legend ○ 20 ● 16

© 2015 Glenair, Inc. U.S. CAGE Code 06324 Printed in Italy

Downloaded from Arrow.com.

Glenair IPT SE Series
Available Insert Arrangements

19 Contacts

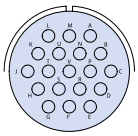

Arrangement:	14-19
Contact Size:	20
Service Rating:	I

23 Contacts

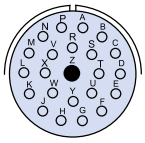

Arrangement:	16-23
Contact Size:	22-20, 1-16
Service Rating:	I

32 Contacts

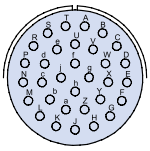

Arrangement:	18-32
Contact Size:	20
Service Rating:	I

41 Contacts

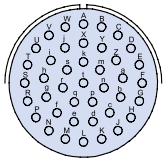

Arrangement:	20-41
Contact Size:	20
Service Rating:	I

61 Contacts

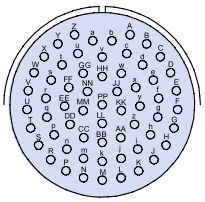

Arrangement:	24-61
Contact Size:	20
Service Rating:	I

21 Contacts

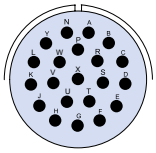

Arrangement:	22-21
Contact Size:	16
Service Rating:	II

26 Contacts

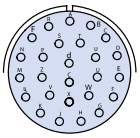

Arrangement:	16-26
Contact Size:	20
Service Rating:	I

39 Contacts

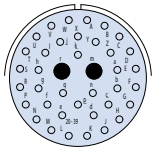

Arrangement:	20-39
Contact Size:	37-20, 2-16
Service Rating:	I

55 Contacts

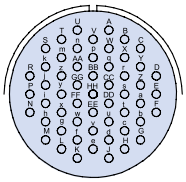

Arrangement:	22-55
Contact Size:	20
Service Rating:	I

Contact Legend ○ 20 ● 16

© 2015 Glenair, Inc. U.S. CAGE Code 06324 Printed in Italy

Downloaded from Arrow.com.

Glenair IPT SE Series Bayonet-Lock High Performance Crimp (MIL-C-26482 Type)

Fastener Height Requirements and Panel Cutout Dimensions

For front panel mount square flange connectors (00) the "A" dimension indicates the measured maximums that mounting hardware can stand proud from the connector flange before it will interfere with connector mating. For rear box mount square flange connectors (02) the same "A" column maximum dimesions apply, but in this case the measurement taken includes the thickness of the panel wall or box (so the mounting hardware needs to be correspondingly shorter). Column "A1" defines the max dimensions for the bulkhead feedthrough (02PP) before mounting hardware interferes with mating.

Maximum Screw Protrusion

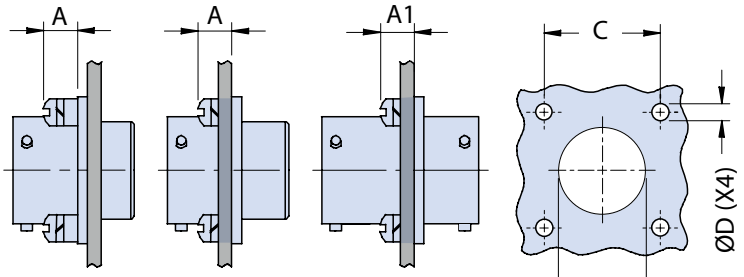

Panel thickness and panel cutout						
Shell Size	A max	A1 max	ØB +0.2 / -0		C ±0.1	ØD ±0.12
			Front Panel	Rear Panel		
8	2.2	5.54	12.7	15.0	15.10	3.04
10	2.2	5.54	16.0	18.0	18.25	3.04
12	2.2	5.54	19.0	22.5	20.60	3.04
14	2.2	5.54	22.2	25.7	23.00	3.04
16	2.2	5.54	25.5	29.0	24.60	3.04
18	2.2	5.54	28.5	32.0	27.00	3.04
20	5.4	8.74	31.7	35.2	29.35	3.04
22	5.4	8.74	35.0	38.5	31.75	3.04
24	5.4	7.9	38.0	41.6	34.90	3.73

07

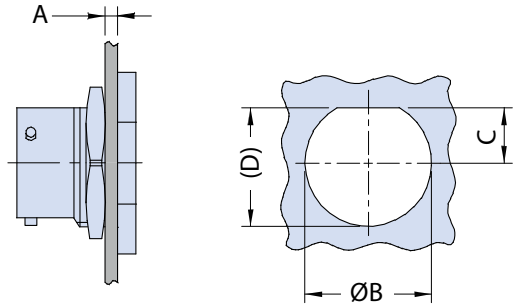

Panel thickness and panel cutout for Jam Nut connectors				
Shell Size	A min - max	ØB +0.2 / -0	C +0 / -0.25	(D)
8	1.6 - 3.2	14.5	6.35	13.6
10	1.6 - 3.2	17.7	7.95	16.8
12	1.6 - 3.2	22.7	9.55	20.9
14	1.6 - 3.2	25.7	11.25	24.1
16	1.6 - 3.2	28.8	12.80	27.2
18	1.6 - 3.2	32.0	14.40	30.4
20	1.6 - 6.3	35.1	16.10	33.6
22	1.6 - 3.2	38.4	17.6	36.8
24	1.6 - 3.2	41.5	19.25	40.0

© 2015 Glenair, Inc. U.S. CAGE Code 06324 Printed in Italy

Downloaded from Arrow.com.

IPT 00 ASE
Front Panel Mount Square Flange Receptacle
with Backshell

Polychloroprene Insert

Connector Shell Styles
00 *- Wall Mounting Receptacle with Accessory Threads*

Shell Size and Insert Arrangement

Alternate Insert Rotation
W, X, Y, Z
(Omit for Normal)

IPT	00	ASE	18-11	P	Z	XX

SIPT

Environmental Class
ASE *- Environmental*

Contact Gender
P *- Pin*
S *- Socket*

Mod. Code Options
See Table II

Silicone Insert

B

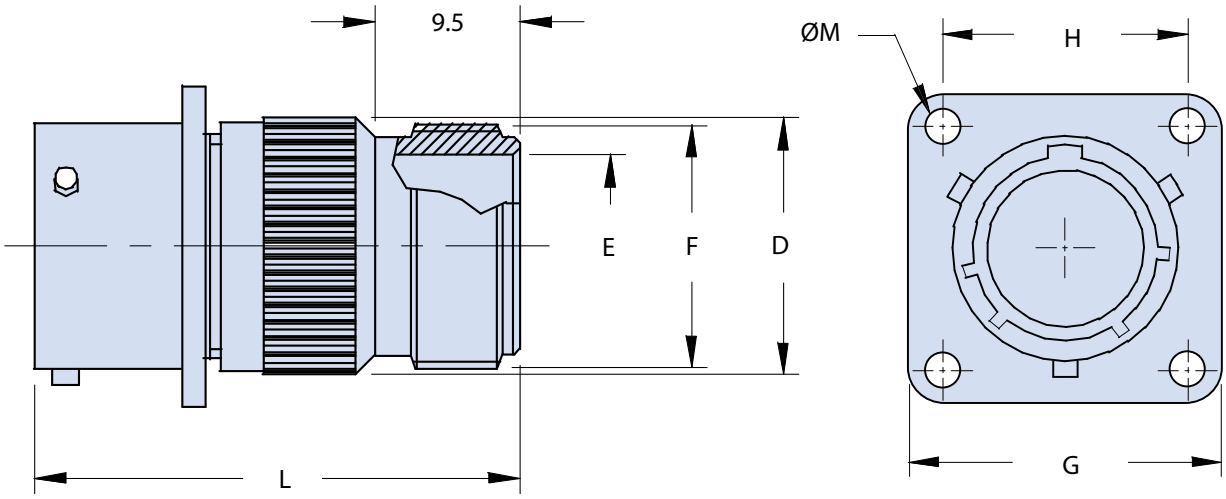

Application Notes

1. Wall mounting receptacle with accessory threads. Through mounting holes.
2. Connector Class "ASE" (environmental).
3. Standard materials configuration consists of aluminum alloy with stainless steel coupling pins.
4. Standard contact material consists of copper alloy with gold plating over nickel.
5. A broad range of other front and rear connector accessories are available. See our website and/or contact factory for complete information.
6. Standard insert is high insulation synthetic rubber.

© 2015 Glenair, Inc. U.S. CAGE Code 06324 Printed in Italy

Downloaded from Arrow.com.

IPT 00 ASE
Front Panel Mount Square Flange Receptacle
with Backshell

Glenair®

TABLE I: DIMENSIONS

Shell size	D Max.	E min.	F Thread in inches	G ±0.4	H ±0.1	ØM +0.1 0	L Max.
8	15.00	7.55	.5000 - 28 UNEF	20.6	15.10	3.04	45.9
10	18.20	10.70	.6250 - 24 UNEF	23.8	18.25	3.04	45.9
12	21.20	13.85	.7500 - 20 UNEF	26.2	20.60	3.04	45.9
14	24.60	16.85	.8750 - 20 UNEF	28.6	23.00	3.04	45.9
16	27.60	20.00	1.0000 - 20 UNEF	31.0	24.60	3.04	45.9
18	30.90	22.30	1.1875 - 18 UNEF	33.3	27.00	3.04	45.9
20	33.80	25.75	1.1875 - 18 UNEF	36.5	29.40	3.04	50.0
22	37.10	28.80	1.4375 - 18 UNEF	39.7	31.75	3.04	50.0
24	40.25	32.00	1.4375 - 18 UNEF	42.8	34.92	3.73	50.0

TABLE II: MODIFICATION CODES

CONTACT OPTIONS	
Sym	**Description**
B0	Connector Without Contacts (Only for crimp version)
FINISH OPTIONS	
Sym	**Description and RoHS compliant**
F6	Black Electrodeposited Paint
F7	Black Zinc Nickel
F11	Electroless Nickel
MB	Marine Bronze
Omit for standard version (Cadmium Olive Drab Finish)	

© 2015 Glenair, Inc.

Downloaded from Arrow.com.

IPT 00 SE
Front Panel Mount Square Flange Receptacle
with General Duty Backshell

Polychloroprene Insert

Connector Shell Styles
00 *- Wall Mounting Receptacle with Accessory Threads*

Shell Size and Insert Arrangement

Alternate Insert Rotation
W, X, Y, Z
(Omit for Normal)

IPT	00	SE	18-11	P	Z	XX

SIPT

Silicone Insert

Environmental Class
SE *- Environmental*

Contact Gender
P *- Pin*
S *- Socket*

Mod. Code Options
See Table II

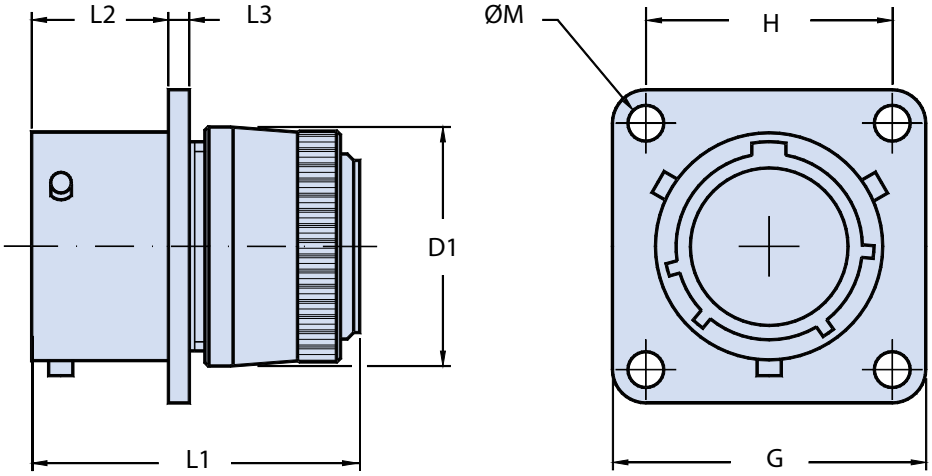

Application Notes

1. Wall mounting receptacle with accessory threads includes sealing grommet and backshell for use with individual wires. Also includes general duty backshell for the attachment of various backend connector accessories; through mounting holes.
2. Connector Class "SE" (environmental).
3. Standard materials configuration consists of aluminum alloy with stainless steel coupling pins.
4. Standard contact material consists of copper alloy with gold plating over nickel.
5. A broad range of other front and rear connector accessories are available. See our website and/or contact factory for complete information.
6. Standard insert is high insulation synthetic rubber.

© 2015 Glenair, Inc. U.S. CAGE Code 06324 Printed in Italy

Downloaded from Arrow.com.

IPT 00 SE
Front Panel Mount Square Flange Receptacle
with General Duty Backshell

Glenair®

TABLE I: DIMENSIONS

Shell Size	D1 Max	G ±0.4	H ±0.1	ØM +0.1 0	L1 Max.	L2 + 0.8 - 0	L3 Max.
8	15.44	20.6	15.10	3.04	40	10.94	2.0
10	18.64	23.8	18.25	3.04	40	10.94	2.0
12	21.79	26.2	20.60	3.04	40	10.94	2.0
14	25.00	28.6	23.00	3.04	40	10.94	2.0
16	28.19	31.0	24.60	3.04	40	10.94	2.0
18	31.34	33.3	27.00	3.04	40	10.94	2.0
20	34.54	36.5	29.40	3.04	44	14.12	2.8
22	37.69	39.7	31.75	3.04	44	14.12	2.8
24	40.89	42.8	34.92	3.73	44	14.86	2.8

TABLE II: MODIFICATION CODES

CONTACT OPTIONS	
Sym	**Description**
B0	Connector Without Contacts (Only for crimp version)
FINISH OPTIONS	
Sym	**Description and RoHS compliant**
F6	Black Electrodeposited Paint
F7	Black Zinc Nickel
F11	Electroless Nickel
MB	Marine Bronze
Omit for standard version (Cadmium Olive Drab Finish)	

© 2015 Glenair, Inc.

Downloaded from Arrow.com.

IPT 00 ASE...N0
Front Panel Mount Square Flange Receptacle
without Backshell

Polychloroprene Insert	Connector Shell Styles	Shell Size and Insert Arrangement	Alternate Insert Rotation	Mod. Code Options
	00 *- Wall Mounting Receptacle with Accessory Threads*		*W, X, Y, Z (Omit for Normal)*	*See Table II*

IPT 00 ASE 18-11 P Z N0 XX

SIPT

Silicone Insert

Environmental Class
ASE...N0 *- Environmental*

Contact Gender
P *- Pin*
S *- Socket*

No Backshell of Any Kind Supplied

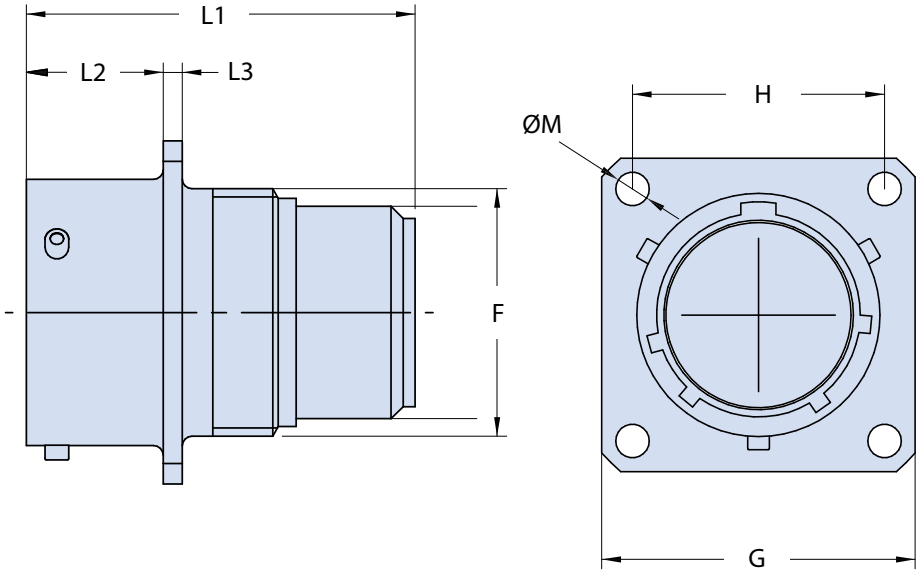

Application Notes

1. Wall mounting receptacle with accessory threads in the rear flange for the backshell and accessories attachment; through mounting holes.
2. Connector Class "ASE...NO" (environmental).
3. Standard materials configuration consists of aluminum alloy with stainless steel coupling pins.
4. Standard contact material consists of copper alloy with gold plating over nickel.
5. A broad range of other front and rear connector accessories are available. See our website and/or contact factory for complete information.
6. Standard insert is high insulation synthetic rubber.

© 2015 Glenair, Inc. U.S. CAGE Code 06324 Printed in Italy

Downloaded from Arrow.com.

IPT 00 ASE...N0
Front Panel Mount Square Flange Receptacle
without Backshell

Glenair®

TABLE I: DIMENSIONS

Shell size	G ±0.4	H ±0.1	ØM +0.1 0	F Thread in inches	L1 Max.	L2 +0.8 -0	L3 Max.
8	20.6	15.10	3.04	.4375 - 28 UNEF	33.5	10.94	2.0
10	23.8	18.25	3.04	.5625 - 24 UNEF	33.5	10.94	2.0
12	26.2	20.60	3.04	6875 - 24 UNEF	33.5	10.94	2.0
14	28.6	23.00	3.04	.8125 - 20 UNEF	33.5	10.94	2.0
16	31.0	24.60	3.04	.9375 - 20 UNEF	33.5	10.94	2.0
18	33.3	27.00	3.04	1.0625 - 18 UNEF	33.5	10.94	2.0
20	36.5	29.40	3.04	1.1875 - 18 UNEF	34.7	14.12	2.8
22	39.7	31.75	3.04	1.3125 - 20 UNEF	36.0	14.12	2.8
24	42.8	34.92	3.73	1.4375 - 18 UNEF	36.0	14.96	2.8

TABLE II: MODIFICATION CODES

CONTACT OPTIONS	
Sym	**Description**
B0	Connector Without Contacts (Only for crimp version)
FINISH OPTIONS	
Sym	**Description and RoHS compliant**
F6	Black Electrodeposited Paint
F7	Black Zinc Nickel
F11	Electroless Nickel
MB	Marine Bronze
Omit for standard version (Cadmium Olive Drab Finish)	

© 2015 Glenair, Inc.

Downloaded from Arrow.com.

IPT 00 SE...SR
Front Panel Mount Square Flange Receptacle
with Backshell, Cable Clamp and Bushing

Polychloroprene Insert	Connector Shell Styles	Shell Size and Insert Arrangement	Alternate Insert Rotation	Mod. Code Options
	00 - Wall Mounting Receptacle with Accessory Threads		*W, X, Y, Z (Omit for Normal)*	*See Table II*

IPT 00 SE 18-11 P Z SR XX

SIPT

Silicone Insert

Environmental Class
SE...SR - Environmental

Contact Gender
P - Pin
S - Socket

Cable Clamp with Bushing

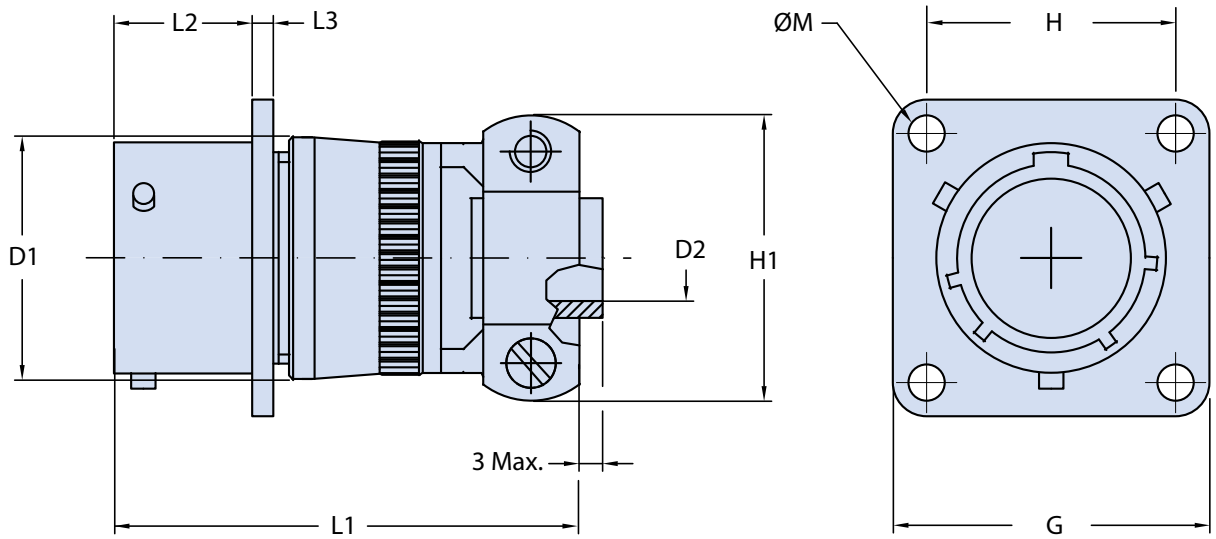

Application Notes

1. Wall mounting receptacle with accessory threads with cable clamp and bushing for cable protection; through mounting holes.
2. Connector Class "SE...SR" (environmental).
3. Standard materials configuration consists of aluminum alloy with stainless steel coupling pins.
4. Standard contact material consists of copper alloy with gold plating over nickel.
5. A broad range of other front and rear connector accessories are available. See our website and/or contact factory for complete information.
6. Standard insert is high insulation synthetic rubber.

© 2015 Glenair, Inc. U.S. CAGE Code 06324 Printed in Italy

Downloaded from Arrow.com.

IPT 00 SE...SR
Front Panel Mount Square Flange Receptacle
with Backshell, Cable Clamp and Bushing

Glenair®

TABLE I: DIMENSIONS

Shell size	G ±0.4	H ±0.1	ØM +0.1 0	D1 Max.	D2 + 0.3 - 0.7	H1 ± 0.2	L1 Max.	L2 + 0.8 - 0	L3 Max.
8	20.6	15.10	3.04	15.44	3.2	19.10	49.5	10.94	2.0
10	23.8	18.25	3.04	18.64	4.8	20.70	49.5	10.94	2.0
12	26.2	20.60	3.04	27.79	7.9	23.90	49.5	10.94	2.0
14	28.6	23.00	3.04	25.00	9.5	27.00	49.5	10.94	2.0
16	31.0	24.60	3.04	28.19	12.7	28.60	53.0	10.94	2.0
18	33.3	27.00	3.04	31.34	15.9	35.00	53.0	10.94	2.0
20	36.5	29.40	3.04	34.54	15.9	35.00	60.5	14.12	2.8
22	39.7	31.75	3.04	37.69	19.1	39.75	60.5	14.12	2.8
24	42.8	34.92	3.73	40.89	20.3	42.10	63.0	14.96	2.8

TABLE II: MODIFICATION CODES

CONTACT OPTIONS	
Sym	**Description**
B0	Connector Without Contacts (Only for crimp version)
FINISH OPTIONS	
Sym	**Description and RoHS compliant**
F6	Black Electrodeposited Paint
F7	Black Zinc Nickel
F11	Electroless Nickel
MB	Marine Bronze
Omit for standard version (Cadmium Olive Drab Finish)	

© 2015 Glenair, Inc.

Downloaded from Arrow.com.

IPT 00 GSE
Front Panel Mount Square Flange Receptacle
with Shrink Boot Backshell

Polychloroprene Insert

Connector Shell Styles
00 - Wall Mounting Receptacle with Accessory Threads

Shell Size and Insert Arrangement

Alternate Insert Rotation
W, X, Y, Z
(Omit for Normal)

IPT	00	GSE	18-11	P	Z	XX

SIPT
Silicone Insert

Environmental Class
GSE - Environmental

Contact Gender
P - Pin
S - Socket

Mod. Code Options
See Table II

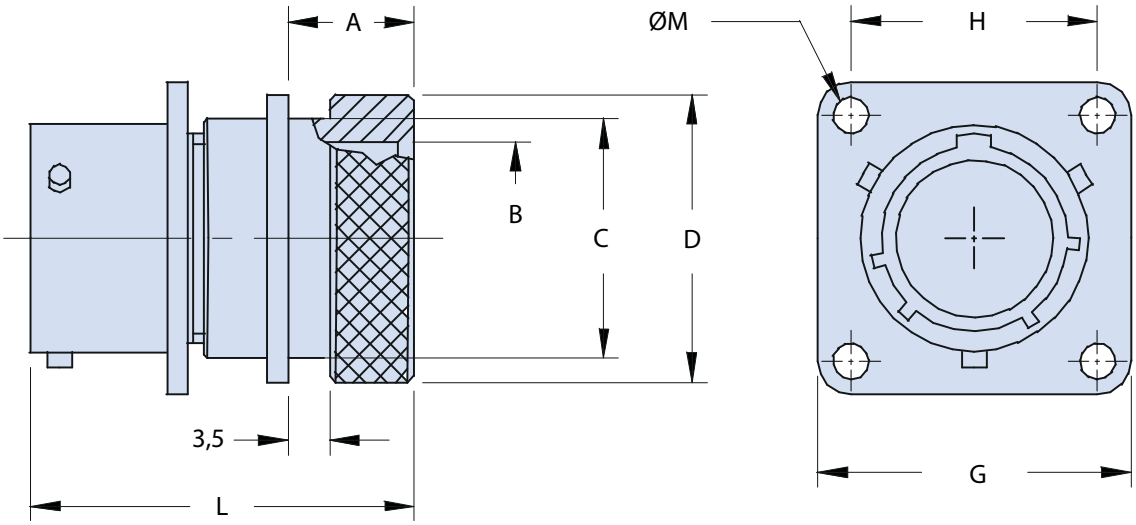

Application Notes

1 Wall mounting receptacle with accessory threads, sealing grommet and backshell for heat shrink boot; through mounting holes.
2. Connector/Backshell Class "GSE" (environmental).
3. Standard materials configuration consists of aluminum alloy with stainless steel coupling pins.
4. Standard contact material consists of copper alloy with gold plating over nickel.
5. A broad range of other front and rear connector accessories are available. See our website and/or contact factory for complete information.
6. Standard insert is high insulation synthetic rubber.

© 2015 Glenair, Inc. U.S. CAGE Code 06324 Printed in Italy

Downloaded from Arrow.com.

IPT 00 GSE
Front Panel Mount Square Flange Receptacle
with Shrink Boot Backshell

TABLE I: DIMENSIONS

Shell size	A ±0.1	B +0.1 -0	C +0 -0.1	D +0 -0.3	G ±0.4	H ±0.1	ØM +0.1 0	L Max.
8	12.2	8.20	13.0	15.5	20.6	15.10	3.04	43.5
10	12.2	11.40	15.8	18.3	23.8	18.25	3.04	42.0
12	12.2	14.55	21.0	23.6	26.2	20.60	3.04	42.0
14	12.2	17.50	21.8	24.4	28.6	23.00	3.04	42.0
16	14.5	20.60	25.9	29.7	31.0	24.60	3.04	44.0
18	14.5	23.15	28.2	31.9	33.3	27.00	3.04	44.5
20	15.8	26.50	32.2	36.0	36.5	29.40	3.04	48.5
22	15.8	29.60	34.5	38.4	39.7	31.75	3.04	48.5
24	14.9	32.80	37.6	41.5	42.8	34.92	3.73	48.5

TABLE II: MODIFICATION CODES

CONTACT OPTIONS	
Sym	**Description**
B0	Connector Without Contacts (Only for crimp version)
FINISH OPTIONS	
Sym	**Description and RoHS compliant**
F6	Black Electrodeposited Paint
F7	Black Zinc Nickel
F11	Electroless Nickel
MB	Marine Bronze
Omit for standard version (Cadmium Olive Drab Finish)	

© 2015 Glenair, Inc.

GLENAIR, INC. • 1211 AIR WAY • GLENDALE, CA 91201-2497 • 818-247-6000 • FAX 818-500-9912
www.glenair.com

E-Mail: sales@glenair.com

Downloaded from Arrow.com.

IPT 00 MSE
Front Panel Mount Square Flange Receptacle
with Backshell
for EMI Shield Termination and Shrink Boot

Polychloroprene Insert

Connector Shell Styles
00 - Wall Mounting Receptacle with Accessory Threads

Shell Size and Insert Arrangement

Alternate Insert Rotation
W, X, Y, Z
(Omit for Normal)

IPT	00	MSE	18-11	P	Z	XX

SIPT
Silicone Insert

Environmental Class
MSE - Environmental

Contact Gender
P - Pin
S - Socket

Mod. Code Options
See Table II

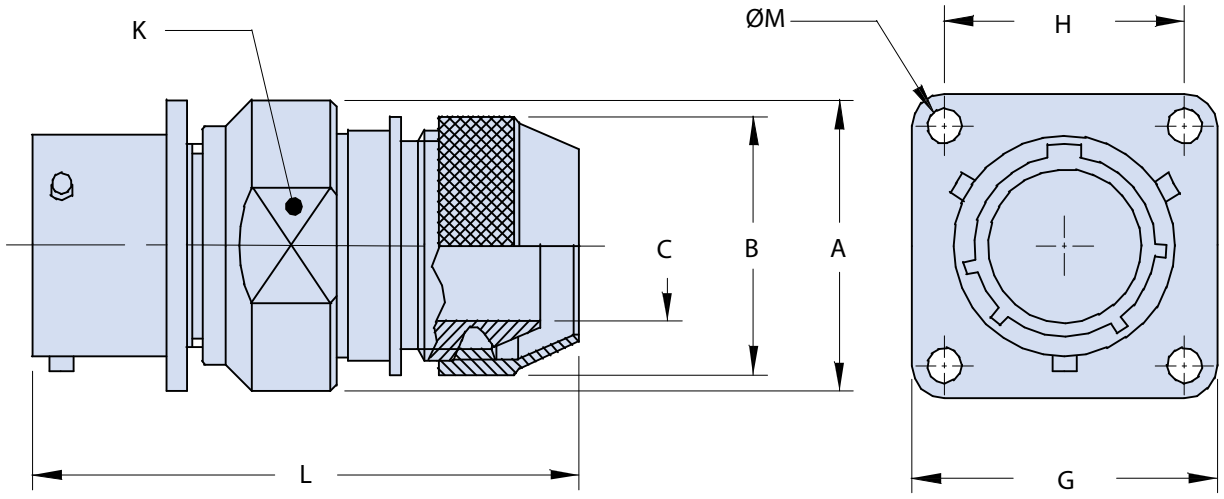

Application Notes

1. Wall mounting receptacle with accessory threads, backshell for terminating shielded cable, suitable for heat shrink boots; through mounting holes.
2. Connector/Backshell Class "MSE" (environmental).
3. Standard materials configuration consists of aluminum alloy with stainless steel coupling pins.
4. Standard contact material consists of copper alloy with gold plating over nickel.
5. A broad range of other front and rear connector accessories are available. See our website and/or contact factory for complete information.
6. Standard insert is high insulation synthetic rubber.

© 2015 Glenair, Inc. U.S. CAGE Code 06324 Printed in Italy

Downloaded from Arrow.com.

IPT 00 MSE
Front Panel Mount Square Flange Receptacle
with Backshell
for EMI Shield Termination and Shrink Boot

TABLE I: DIMENSIONS

Shell size	A Max.	B +0.5 -0	C min.	G ±0.4	H ±0.1	ØM +0.1 0	L Max.	K Key
8	20	16	6.6	20.6	15.10	3.04	55	18
10	23	18	9.2	23.8	18.25	3.04	55	21
12	27	22	12.2	26.2	20.60	3.04	55	24
14	30	25	15.2	28.6	23.00	3.04	56	28
16	33	28	18.3	31.0	24.60	3.04	56	31
18	36	32	20.0	33.3	27.00	3.04	56	34
20	40	34	23.0	36.5	29.40	3.04	62	37
22	43	38	26.0	39.7	31.75	3.04	62	41
24	46	41	28.8	42.8	34.92	3.73	64	44

TABLE II: MODIFICATION CODES

CONTACT OPTIONS	
Sym	**Description**
B0	Connector Without Contacts (Only for crimp version)
FINISH OPTIONS	
Sym	**Description and RoHS compliant**
F7	Black Zinc Nickel
F11	Electroless Nickel
MB	Marine Bronze
Omit for standard version (Cadmium Olive Drab Finish)	

© 2015 Glenair, Inc.

GLENAIR, INC. • 1211 AIR WAY • GLENDALE, CA 91201-2497 • 818-247-6000 • FAX 818-500-9912
www.glenair.com **E-Mail: sales@glenair.com**

Downloaded from Arrow.com.

IPT 01 ASE
In-Line Cable Connector
with Backshell

Polychloroprene Insert	Connector Shell Styles	Shell Size and Insert Arrangement	Alternate Insert Rotation			
	01 *-In-Line Cable Connector*		*W, X, Y, Z* *(Omit for Normal)*			
IPT	**01**	**ASE**	**18-11**	**P**	**Z**	**XX**
SIPT		**Environmental Class** ***ASE*** *- Environmental*		**Contact Gender** ***P*** *- Pin* ***S*** *- Socket*		**Mod. Code Options** *See Table II*
Silicone Insert						

B

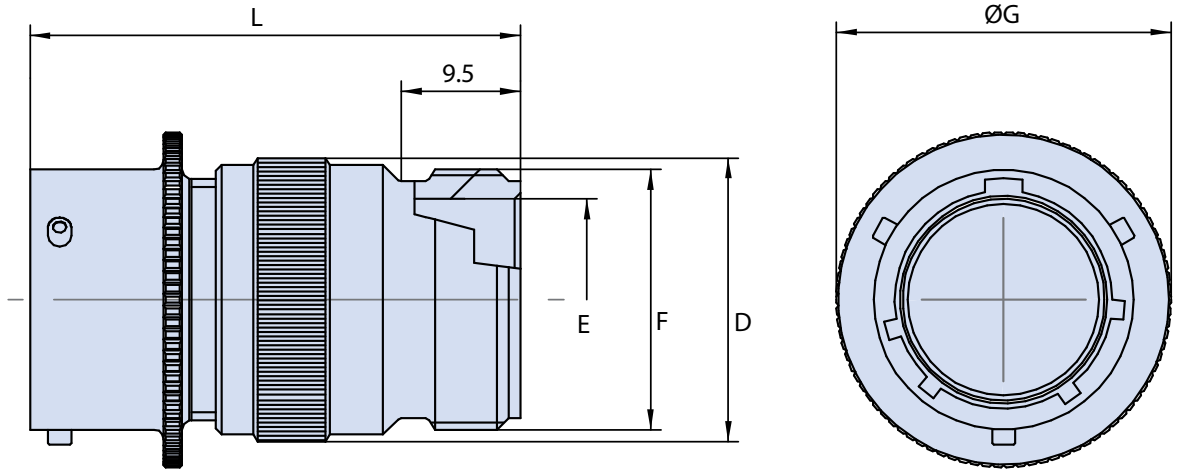

Application Notes

1. In-Line cable connector, with backshell for the attachment of additional accessories.
2. Connector Class "ASE" (environmental).
3. Standard materials configuration consists of aluminum alloy with stainless steel coupling pins.
4. Standard contact material consists of copper alloy with gold plating over nickel.
5. A broad range of other front and rear connector accessories are available. See our website and/or contact factory for complete information.
6. Standard insert is high insulation synthetic rubber.

© 2015 Glenair, Inc. U.S. CAGE Code 06324 Printed in Italy

Downloaded from Arrow.com.

IPT 01 ASE
In-Line Cable Connector
with Backshell

Glenair®

TABLE I: DIMENSIONS

Shell size	D Max.	E min.	F Thread in inches	ØG ±0.2	L Max.
8	15.00	7.55	.5000 - 28 UNEF	17.3	45.9
10	18.20	10.70	.6250 - 24 UNEF	21.8	45.9
12	21.20	13.85	.7500 - 20 UNEF	25.1	45.9
14	24.60	16.85	.8750 - 20 UNEF	28.6	45.9
16	27.60	20.00	1.0000 - 20 UNEF	30.6	45.9
18	30.90	22.30	1.1875 - 18 UNEF	33.2	45.9
20	33.80	25.75	1.1875 - 18 UNEF	36.5	50.0
22	37.10	28.80	1.4375 - 18 UNEF	39.6	50.0
24	40.25	32.00	1.4375 - 18 UNEF	43.1	50.0

TABLE II: MODIFICATION CODES

CONTACT OPTIONS	
Sym	**Description**
B0	Connector Without Contacts (Only for crimp version)
FINISH OPTIONS	
Sym	**Description and RoHS compliant**
F6	Black Electrodeposited Paint
F7	Black Zinc Nickel
F11	Electroless Nickel
MB	Marine Bronze
Omit for standard version (Cadmium Olive Drab Finish)	

© 2015 Glenair, Inc.

Downloaded from Arrow.com.

IPT 01 SE
In-Line Cable Connector
with General Duty Backshell

Polychloroprene Insert

Connector Shell Styles
01 -In-Line Cable Connector

Shell Size and Insert Arrangement

Alternate Insert Rotation
W, X, Y, Z
(Omit for Normal)

IPT 01 SE 18-11 P Z XX

SIPT

Environmental Class
SE - Environmental

Contact Gender
P - Pin
S - Socket

Mod. Code Options
See Table II

Silicone Insert

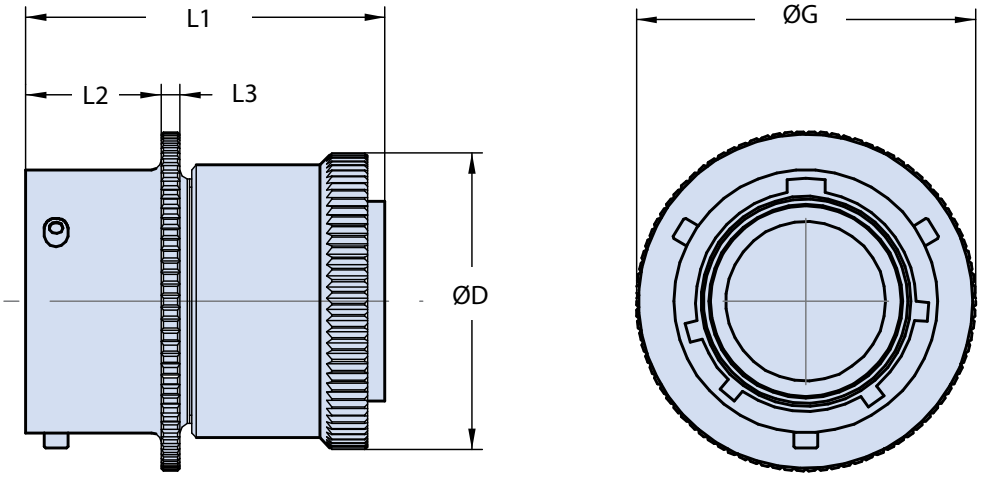

Application Notes

1. In-Line cable connector includes sealing grommet and backshell for use with individual wires.
2. Connector Class "SE". Wire sealing grommet supplied.
3. Standard materials configuration consists of aluminum alloy with stainless steel coupling pins.
4. Standard contact material consists of copper alloy with gold plating over nickel.
5. A broad range of other front and rear connector accessories are available. See our website and/or contact factory for complete information.
6. Standard insert is high insulation synthetic rubber.

© 2015 Glenair, Inc. U.S. CAGE Code 06324 Printed in Italy

Downloaded from Arrow.com.

TABLE I: DIMENSIONS

Shell size	ØD Max.	ØG ±0.2	L1 Max.	L2 + 0.8 - 0	L3 Max.
8	15.44	17.3	33.5	10.94	2.0
10	18.64	21.8	33.5	10.94	2.0
12	21.79	25.1	33.5	10.94	2.0
14	25.00	28.6	33.5	10.94	2.0
16	28.19	30.6	33.5	10.94	2.0
18	31.34	33.2	33.5	10.94	2.0
20	34.54	36.5	34.7	14.12	2.8
22	37.69	39.6	36.0	14.12	2.8
24	40.89	43.1	36.0	14.96	2.8

TABLE II: MODIFICATION CODES

CONTACT OPTIONS	
Sym	**Description**
B0	Connector Without Contacts (Only for crimp version)
FINISH OPTIONS	
Sym	**Description and RoHS compliant**
F6	Black Electrodeposited Paint
F7	Black Zinc Nickel
F11	Electroless Nickel
MB	Marine Bronze
Omit for standard version (Cadmium Olive Drab Finish)	

© 2015 Glenair, Inc.

Downloaded from Arrow.com.

IPT 01 ASE...N0
In-Line Cable Connector

Polychloroprene Insert	Connector Shell Styles	Shell Size and Insert Arrangement	Alternate Insert Rotation	Mod. Code Options
	01 *-In-Line Cable Connector*		*W, X, Y, Z (Omit for Normal)*	*See Table II*
IPT	**01**	**ASE**	**18-11**	**P**	**Z**	**N0**	**XX**
SIPT							

Environmental Class
ASE...NO *- Environmental*

Contact Gender
P *- Pin*
S *- Socket*

No Backshell of Any Kind Supplied

Silicone Insert

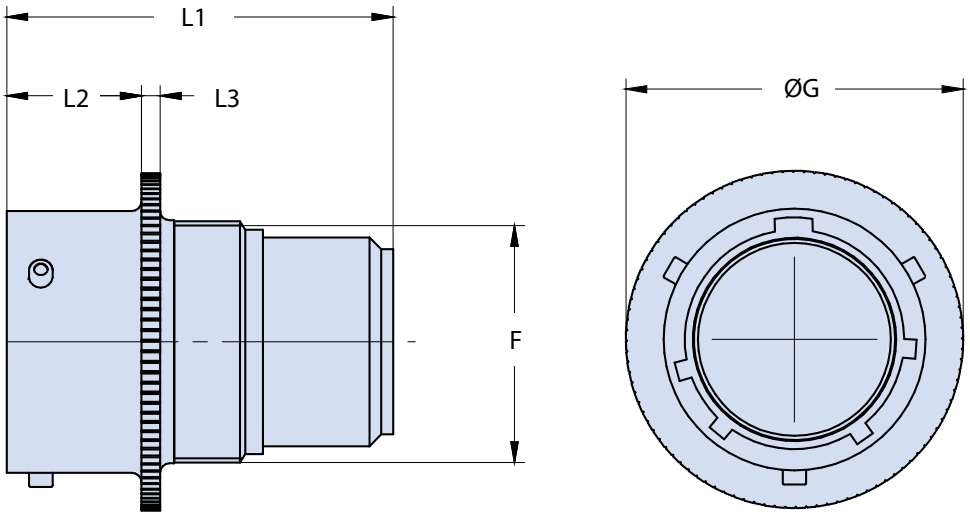

Application Notes

1. In-Line cable connector threaded in the rear body for the attachment of additional accessories.
2. Connector Class "ASE...NO" (environmental).
3. Standard materials configuration consists of aluminum alloy with stainless steel coupling pins.
4. Standard contact material consists of copper alloy with gold plating over nickel.
5. A broad range of other front and rear connector accessories are available. See our website and/or contact factory for complete information.
6. Standard insert is high insulation synthetic rubber.

© 2015 Glenair, Inc. U.S. CAGE Code 06324 Printed in Italy

Downloaded from Arrow.com.

TABLE I: DIMENSIONS

Shell size	ØG ±0.2	F Thread in inches	L1 Max.	L2 + 0.8 - 0	L3 Max.
8	17.3	.4375 - 28 UNEF	33.5	10.94	2.0
10	21.8	.5625 - 24 UNEF	33.5	10.94	2.0
12	25.1	.6875 - 24 UNEF	33.5	10.94	2.0
14	28.6	.8125 - 20 UNEF	33.5	10.94	2.0
16	30.6	.9375 - 20 UNEF	33.5	10.94	2.0
18	33.2	1.0625 - 18 UNEF	33.5	10.94	2.0
20	36.5	1.1875 - 18 UNEF	34.7	14.12	2.8
22	39.6	1.3125 - 18 UNEF	36.0	14.12	2.8
24	43.1	1.4375 - 18 UNEF	36.0	14.96	2.8

TABLE II: MODIFICATION CODES

CONTACT OPTIONS	
Sym	**Description**
B0	Connector Without Contacts (Only for crimp version)
FINISH OPTIONS	
Sym	**Description and RoHS compliant**
F6	Black Electrodeposited Paint
F7	Black Zinc Nickel
F11	Electroless Nickel
MB	Marine Bronze
Omit for standard version (Cadmium Olive Drab Finish)	

© 2015 Glenair, Inc.

Downloaded from Arrow.com.

IPT 01 SE...SR
In-Line Cable Connector
with Backshell, Cable Clamp and Bushing

Polychloroprene Insert	Connector Shell Styles	Shell Size and Insert Arrangement	Alternate Insert Rotation	Mod. Code Options
	01 *- In-Line Cable Connector*		*W, X, Y, Z (Omit for Normal)*	*See Table II*

IPT 01 SE 18-11 P Z SR XX

SIPT

Silicone Insert	Environmental Class	Contact Gender	Cable Clamp with Bushing
	SE...SR *- Environmental*	***P*** *- Pin* ***S*** *- Socket*	

B

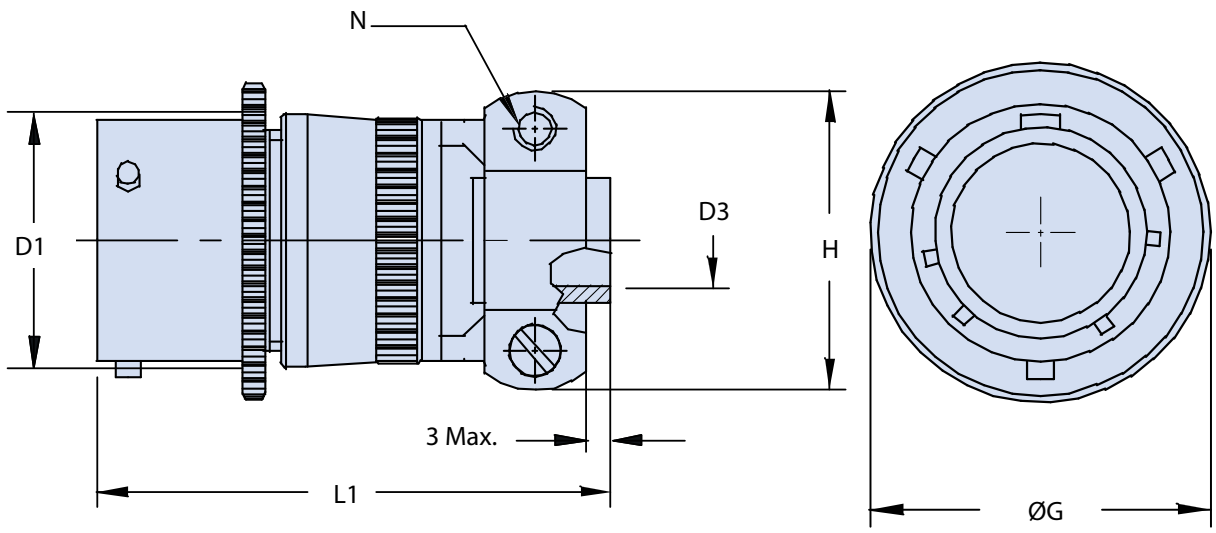

Application Notes

1. In-Line cable connector with sealing grommet, cable clamp and bushing for cable protection.
2. Connector Class "SE...SR" (environmental).
3. Standard materials configuration consists of aluminum alloy with stainless steel coupling pins.
4. Standard contact material consists of copper alloy with gold plating over nickel.
5. A broad range of other front and rear connector accessories are available. See our website and/or contact factory for complete information.
6. Standard insert is high insulation synthetic rubber.

© 2015 Glenair, Inc. U.S. CAGE Code 06324 Printed in Italy

Downloaded from Arrow.com.

IPT 01 SE...SR
In-Line Cable Connector
with Backshell, Cable Clamp and Bushing

Glenair®

TABLE I: DIMENSIONS

Shell size	N Thread	D1 Max.	D3 + 0.3 -0.7	L1 Max.	ØG ±0.2	H ± 0.2
8	6-32 UNC	15.44	3.2	49.5	17.3	19.10
10	6-32 UNC	18.64	4.8	49.5	21.8	20.70
12	6-32 UNC	21.79	7.9	49.5	25.1	23.90
14	6-32 UNC	25.00	9.5	49.5	28.6	27.00
16	6-32 UNC	28.19	12.7	53.0	30.6	28.60
18	8-32 UNC	31.34	15.9	53.0	33.2	35.00
20	8-32 UNC	34.54	15.9	60.5	36.5	35.00
22	8-32 UNC	37.69	19.1	60.5	39.6	39.75
24	8-32 UNC	40.89	20.3	63.0	43.1	42.10

TABLE II: MODIFICATION CODES

CONTACT OPTIONS	
Sym	**Description**
B0	Connector Without Contacts (Only for crimp version)
FINISH OPTIONS	
Sym	**Description and RoHS compliant**
F6	Black Electrodeposited Paint
F7	Black Zinc Nickel
F11	Electroless Nickel
MB	Marine Bronze
Omit for standard version (Cadmium Olive Drab Finish)	

© 2015 Glenair, Inc.

Downloaded from Arrow.com.

IPT 01 GSE
In-Line Cable Connector
with Shrink Boot Backshell

Polychloroprene Insert	Connector Shell Styles	Shell Size and Insert Arrangement	Alternate Insert Rotation			
	01 *- In-Line Cable Connector*		*W, X, Y, Z (Omit for Normal)*			
IPT	**01**	**GSE**	**18-11**	**P**	**Z**	**XX**
SIPT		**Environmental Class** ***GSE*** *- Environmental*		**Contact Gender** ***P*** *- Pin* ***S*** *- Socket*		**Mod. Code Options** *See Table II*
Silicone Insert						

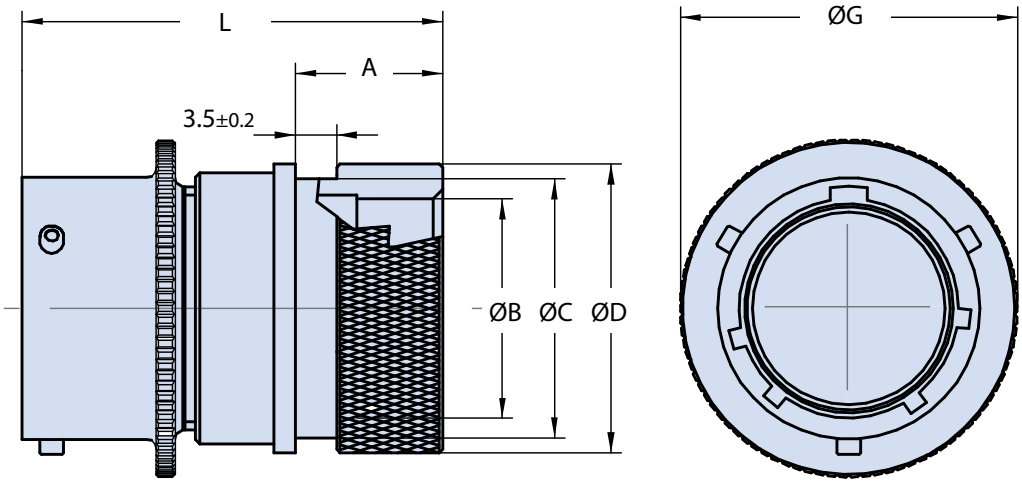

Application Notes

1. In-Line cable connector with sealing grommet and backshell for heat shrink boot.
2. Connector/Backshell Class "GSE" (environmental).
3. Standard materials configuration consists of aluminum alloy with stainless steel coupling pins.
4. Standard contact material consists of copper alloy with gold plating over nickel.
5. A broad range of other front and rear connector accessories are available. See our website and/or contact factory for complete information.
6. Standard insert is high insulation synthetic rubber.

© 2015 Glenair, Inc. U.S. CAGE Code 06324 Printed in Italy

Downloaded from Arrow.com.

IPT 01 GSE
In-Line Cable Connector
with Shrink Boot Backshell

Glenair®

TABLE I: DIMENSIONS

Shell size	A ±0.1	ØB +0.1 -0	ØC +0 -0.1	ØD +0 -0.3	L Max.	ØG ±0.2
8	12.2	8.20	13.0	15.5	43.5	17.3
10	12.2	11.40	15.8	18.3	42.0	21.8
12	12.2	14.55	21.0	23.6	42.0	25.1
14	12.2	17.50	21.8	24.4	42.0	28.6
16	14.5	20.60	25.9	29.7	44.0	30.6
18	14.5	23.15	28.2	31.9	44.5	33.2
20	15.8	26.50	32.2	36.0	48.5	36.5
22	15.8	29.60	34.5	38.4	48.5	39.6
24	14.9	32.80	37.6	41.5	48.5	43.1

TABLE II: MODIFICATION CODES

CONTACT OPTIONS	
Sym	**Description**
B0	Connector Without Contacts (Only for crimp version)
FINISH OPTIONS	
Sym	**Description and RoHS compliant**
F6	Black Electrodeposited Paint
F7	Black Zinc Nickel
F11	Electroless Nickel
MB	Marine Bronze
Omit for standard version (Cadmium Olive Drab Finish)	

© 2015 Glenair, Inc.

Downloaded from Arrow.com.

IPT 01 MSE
In-Line Cable Connector
with Backshell for
EMI Shield Termination and Shrink Boot

Polychloroprene Insert

Connector Shell Styles
01 - In-Line Cable Connector

Shell Size and Insert Arrangement

Alternate Insert Rotation
W, X, Y, Z
(Omit for Normal)

IPT 01 MSE 18-11 P Z XX

SIPT

Environmental Class
MSE - Environmental

Contact Gender
P - Pin
S - Socket

Mod. Code Options
See Table II

Silicone Insert

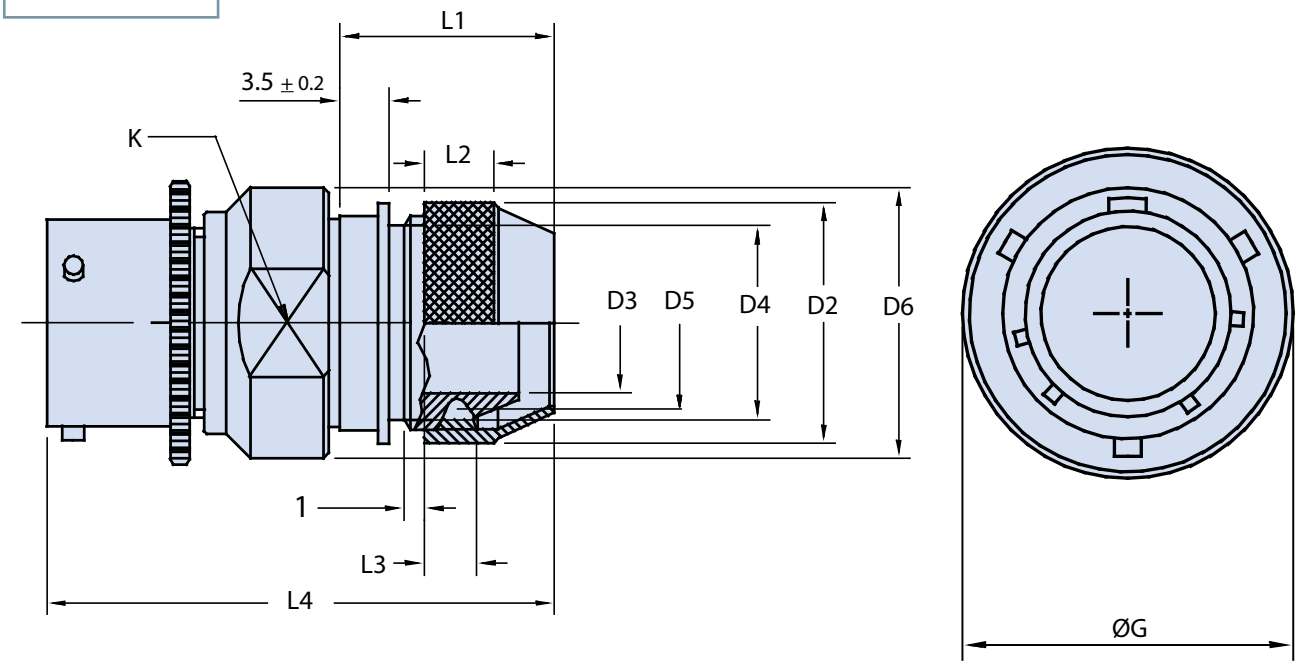

Application Notes

1. In-Line cable connector with sealing grommet and backshell for heat shrink boot.
2. Connector/Backshell Class "MSE" (environmental).
3. Standard materials configuration consists of aluminum alloy with stainless steel coupling pins.
4. Standard contact material consists of copper alloy with gold plating over nickel.
5. A broad range of other front and rear connector accessories are available. See our website and/or contact factory for complete information.
6. Standard insert is high insulation synthetic rubber.

© 2015 Glenair, Inc. U.S. CAGE Code 06324 Printed in Italy

Downloaded from Arrow.com.

IPT 01 MSE
In-Line Cable Connector
with Backshell for
EMI Shield Termination and Shrink Boot

TABLE I: DIMENSIONS

Shell size	K Key	ØG ±0.2	D2 +0.5 -0	D3 min.	D4	D5	D6 Max.	L1 +0 -2.5	L2 +1.5 -0	L3 min.	L4 Max.
8	18	17.3	16	6.6	13.5	M14x1	20	17	5	4	55
10	21	21.8	18	9.2	16.0	M16x1	23	17	5	4	55
12	24	25.1	22	12.2	20.0	M20x1	27	17	7	5	55
14	28	28.6	25	15.2	22.0	M23x1	30	18	8	6	56
16	31	30.6	28	18.3	26.0	M26x1	33	18	8	6	56
18	34	33.2	32	20.0	28.2	M30x1	36	18	10	6	56
20	37	36.5	34	23.0	30.5	M32x1	40	18	10	6	62
22	41	39.6	38	26.0	34.5	M36x1	43	18	10	6	62
24	44	43.1	41	28.8	37.2	M39x1	46	18	10	6	64

TABLE II: MODIFICATION CODES

CONTACT OPTIONS	
Sym	**Description**
B0	Connector Without Contacts (Only for crimp version)
FINISH OPTIONS	
Sym	**Description and RoHS compliant**
F7	Black Zinc Nickel
F11	Electroless Nickel
MB	Marine Bronze
Omit for standard version (Cadmium Olive Drab Finish)	

© 2015 Glenair, Inc.

Downloaded from Arrow.com.

IPT 02 SE
Box Mounting Square Flange Receptacle

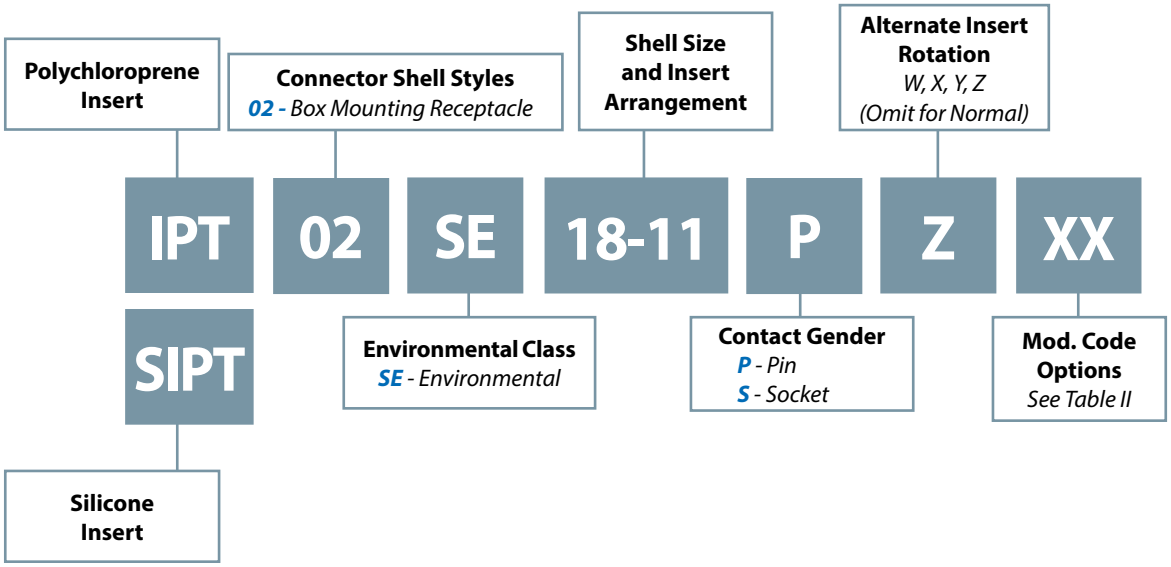

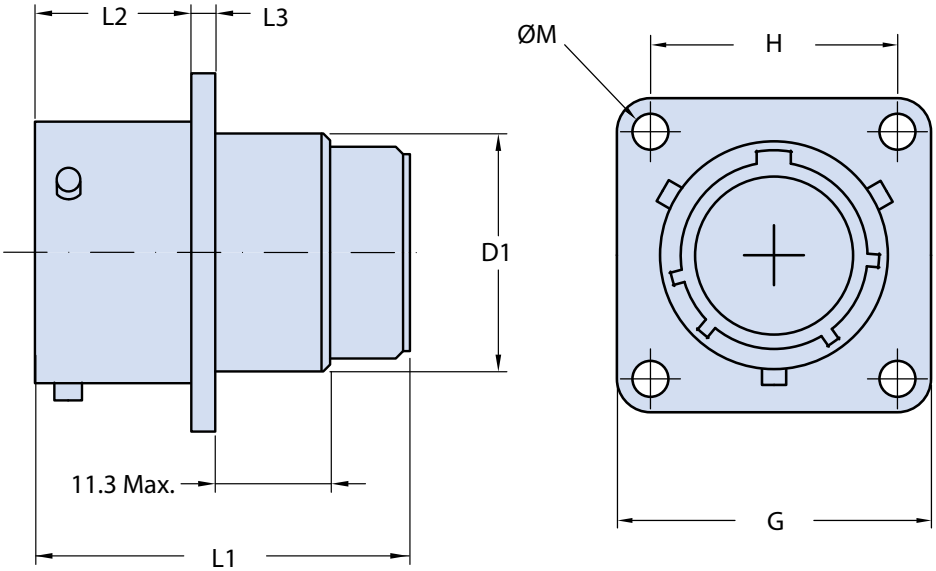

Application Notes

1. Box mounting receptacle with through mounting holes; no rear accessory threads.
2. Connector Class "SE" (environmental).
3. Standard materials configuration consists of aluminum alloy with stainless steel coupling pins.
4. Standard contact material consists of copper alloy with gold plating over nickel.
5. Standard insert is high insulation synthetic rubber.

© 2015 Glenair, Inc. U.S. CAGE Code 06324 Printed in Italy

Downloaded from Arrow.com.

IPT 02 SE
Box Mounting Square Flange Receptacle

TABLE I: DIMENSIONS

Shell size	G ±0.4	H ±0.1	ØM +0.1 0	D1 + 0.8 - 0.6	L1 Max.	L2 + 0.8 - 0	L3 Max.
8	20.6	15.10	3.04	11.2	33.5	10.94	2.0
10	23.8	18.25	3.04	14.3	33.5	10.94	2.0
12	26.2	20.60	3.04	17.5	33.5	10.94	2.0
14	28.6	23.00	3.04	20.7	33.5	10.94	2.0
16	31.0	24.60	3.04	23.9	33.5	10.94	2.0
18	33.3	27.00	3.04	27.0	33.5	10.94	2.0
20	36.5	29.40	3.04	30.2	34.7	14.12	2.8
22	39.7	31.75	3.04	33.4	36.0	14.12	2.8
24	42.8	34.92	3.73	36.6	36.0	14.96	2.8

TABLE II: MODIFICATION CODES

CONTACT OPTIONS	
Sym	**Description**
B0	Connector Without Contacts (Only for crimp version)
FINISH OPTIONS	
Sym	**Description and RoHS compliant**
F6	Black Electrodeposited Paint
F7	Black Zinc Nickel
F11	Electroless Nickel
MB	Marine Bronze
Omit for standard version (Cadmium Olive Drab Finish)	

© 2015 Glenair, Inc.

Downloaded from Arrow.com.

IPT 02 PP
Through Bulkhead Receptacle

IPT	02	PP	18-11	P/S	Z	XX

- **IPT** — **Polychloroprene Insert**
- **SIPT** — **Silicone Insert**
- **02** — **Connector Shell Styles** *02 - Box Mounting Receptacle*
- **PP** — **Environmental Class** *PP - Through Bulkhead*
- **18-11** — **Shell Size and Insert Arrangement**
- **P/S** — **Solid Contact Gender** *P/S - Pin and Socket*
- **Z** — **Alternate Insert Rotation** *W, X, Y, Z (Omit for Normal)*
- **XX** — **Mod. Code Options** *See Table II*

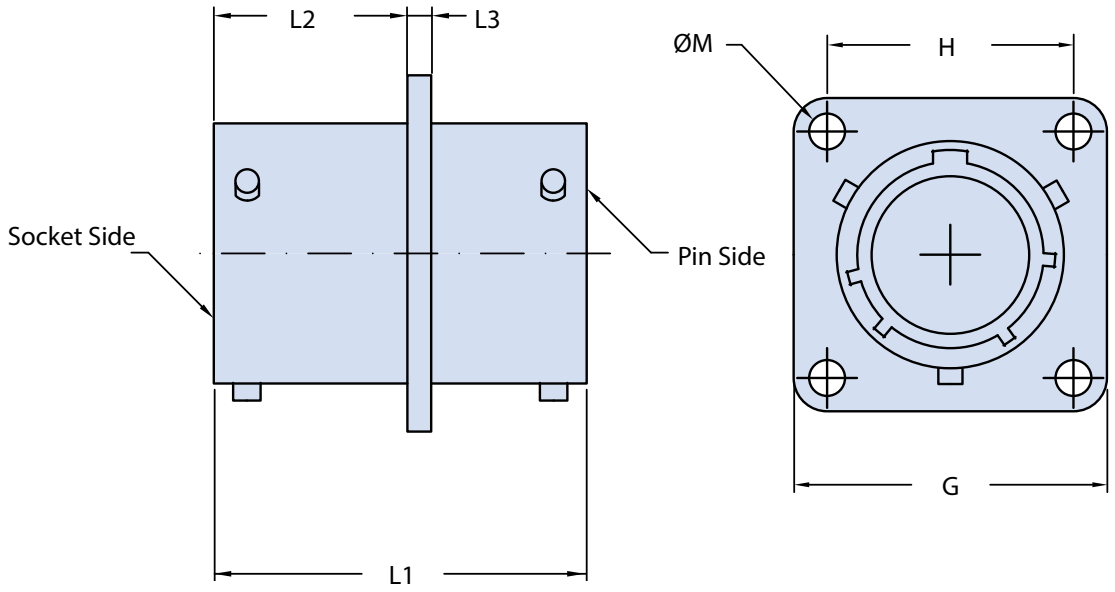

Application Notes

1. Through bulkhead receptacle with solid feedthrough contacts.
2. Through mounting holes.
3. Standard materials configuration consists of aluminum alloy with stainless steel coupling pins.
4. Standard contact material consists of copper alloy with gold plating over nickel.
5. Standard insert is high insulation synthetic rubber.

© 2015 Glenair, Inc. U.S. CAGE Code 06324 Printed in Italy

Downloaded from Arrow.com.

IPT 02 PP
Through Bulkhead Receptacle

TABLE I: DIMENSIONS

Shell size	G ±0.4	H ±0.1	ØM +0.1 0	L1 + 0.5 0	L2 + 0.2 0	L3 ± 0.2
8	20.6	15.10	3.04	26.5	14.5	1.6
10	23.8	18.25	3.04	26.5	14.5	1.6
12	26.2	20.60	3.04	26.5	14.5	1.6
14	28.6	23.00	3.04	26.5	14.5	1.6
16	31.0	24.60	3.04	26.5	14.5	1.6
18	33.3	27.00	3.04	26.5	14.5	1.6
20	36.5	29.40	3.04	33.5	17.8	2.5
22	39.7	31.75	3.04	33.5	17.8	2.5
24	42.8	34.92	3.73	33.5	17.8	2.5

TABLE II: MODIFICATION CODES

FINISH OPTIONS	
Sym	**Description and RoHS compliant**
F6	Black Electrodeposited Paint
F7	Black Zinc Nickel
F11	Electroless Nickel
MB	Marine Bronze
Omit for standard version (Cadmium Olive Drab Finish)	

© 2015 Glenair, Inc.

GLENAIR, INC. • 1211 AIR WAY • GLENDALE, CA 91201-2497 • 818-247-6000 • FAX 818-500-9912
www.glenair.com

E-Mail: sales@glenair.com

Downloaded from Arrow.com.

IPT 06 ASE
Straight Plug Connector
with Backshell to Accommodate MS3057 Cable Clamp (Not Included)

IPT	G	06	ASE	18-11	P	Z	XX

- **IPT** — Polychloroprene Insert
- **SIPT** — Silicone Insert
- **G** — Grounding Fingers (*Omit for Strandard*)
- **06** — Connector Shell Styles: ***06*** *- Straight Plug Connector*
- **ASE** — Environmental Class: ***ASE*** *- Environmental*
- **18-11** — Shell Size and Insert Arrangement
- **P** — Contact Gender: ***P*** *- Pin*; ***S*** *- Socket*
- **Z** — Alternate Insert Rotation: *W, X, Y, Z* (*Omit for Normal*)
- **XX** — Mod. Code Options: *See Table II*

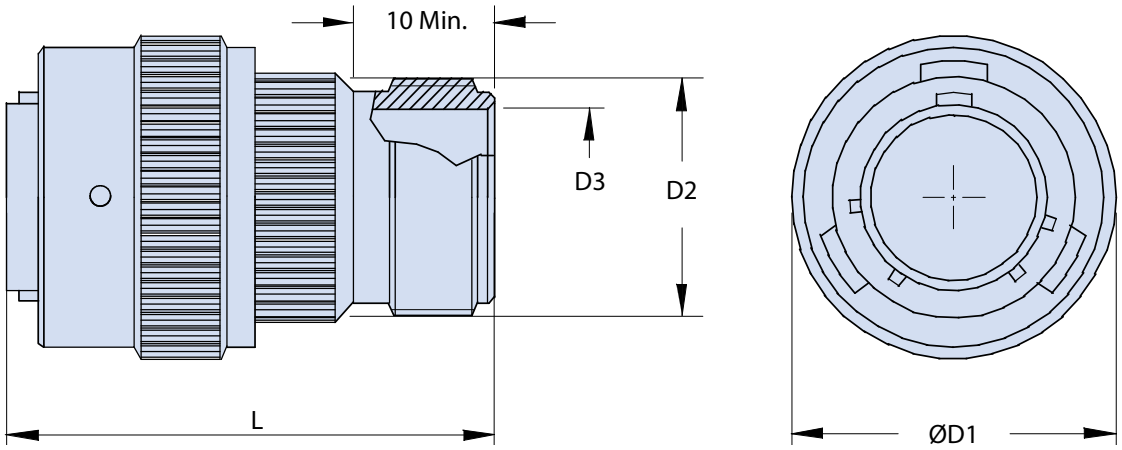

Application Notes

1. Straight plug connector with accessory threads.
2. Connector Class "ASE"(environmental).
3. Standard materials configuration consists of aluminum alloy.
4. Standard contact material consists of copper alloy with gold plating over nickel.
5. Standard insert is high insulation synthetic rubber.

© 2015 Glenair, Inc. U.S. CAGE Code 06324 Printed in Italy

Downloaded from Arrow.com.

IPT 06 ASE
Straight Plug Connector
with Backshell to Accommodate MS3057 Cable Clamp (Not Included)

Glenair®

TABLE I: DIMENSIONS

Shell size	ØD1 ±0.2	D2	D3 Min.	L Max.
8	18.10	0.5000 - 28UNEF	6.6	45.9
10	21.05	0.6250 - 24UNEF	9.2	45.9
12	25.15	0.7500 - 20UNEF	12.2	45.9
14	28.40	0.8750 - 20UNEF	15.2	45.9
16	31.60	1.0000 - 20UNEF	18.3	45.9
18	35.00	1.1875 - 18UNEF	20.0	45.9
20	37.70	1.1875 - 18UNEF	23.0	50.0
22	40.20	1.4375 - 18UNEF	26.0	50.0
24	44.00	1.4375 - 18UNEF	28.8	50.0

TABLE II: MODIFICATION CODES

CONTACT OPTIONS	
Sym	**Description**
B0	Connector Without Contacts (Only for crimp version)
FINISH OPTIONS	
Sym	**Description and RoHS compliant**
F6	Black Electrodeposited Paint
F7	Black Zinc Nickel
F11	Electroless Nickel
MB	Marine Bronze
Omit for standard version (Cadmium Olive Drab Finish)	

© 2015 Glenair, Inc.

Downloaded from Arrow.com.

IPT 06 SE
Straight Plug Connector
with General Duty Backshell

Polychloroprene Insert

Connector Shell Styles
06 - Straight Plug Connector

Shell Size and Insert Arrangement

Alternate Insert Rotation
W, X, Y, Z
(Omit for Normal)

IPT	G	06	SE	18-11	P	Z	XX

SIPT

Grounding Fingers
(Omit for Strandard)

Environmental Class
SE - Environmental

Contact Gender
P - Pin
S - Socket

Mod. Code Options
See Table II

Silicone Insert

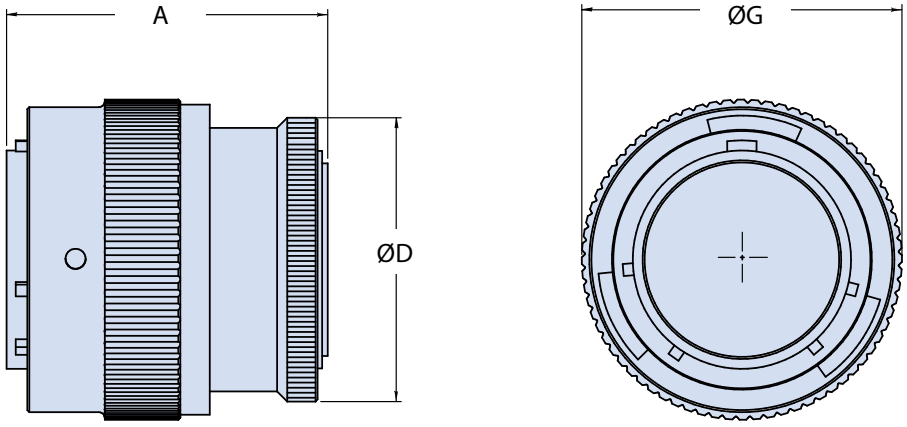

Application Notes

1. Straight plug connector includes sealing grommet and backshell for use with individual wires.
2. Connector Class "SE"(environmental).
3. Standard materials configuration consists of aluminum alloy.
4. Standard contact material consists of copper alloy with gold plating over nickel.
5. A broad range of other front and rear connector accessories are available. See our website and/or contact factory for complete information.
6. Standard insert is high insulation synthetic rubber.

© 2015 Glenair, Inc. U.S. CAGE Code 06324 Printed in Italy

Downloaded from Arrow.com.

TABLE I: DIMENSIONS

Shell size	A ±0.5	ØD Max.	ØG ±0.2
8	31.7	15.44	18.10
10	31.7	18.64	21.05
12	31.7	21.79	25.15
14	32.7	25.00	28.40
16	31.7	28.19	31.60
18	31.7	31.34	35.00
20	31.7	34.54	37.70
22	31.7	37.69	40.20
24	33.7	40.89	44.00

TABLE II: MODIFICATION CODES

CONTACT OPTIONS	
Sym	**Description**
B0	Connector Without Contacts (Only for crimp version)
FINISH OPTIONS	
Sym	**Description and RoHS compliant**
F6	Black Electrodeposited Paint
F7	Black Zinc Nickel
F11	Electroless Nickel
MB	Marine Bronze
Omit for standard version (Cadmium Olive Drab Finish)	

© 2015 Glenair, Inc.

Downloaded from Arrow.com.

IPT 06 ASE...N0
Straight Plug Connector
without Backshell

Polychloroprene Insert	Connector Shell Styles	Shell Size and Insert Arrangement	Alternate Insert Rotation	Mod. Code Options
	06 - Straight Plug Connector		*W, X, Y, Z (Omit for Normal)*	*See Table II*

IPT	G	06	ASE	18-11	P	Z	N0	XX

SIPT	Grounding Fingers	Environmental Class	Contact Gender	No Backshell of Any Kind Supplied
Silicone Insert	*(Omit for Strandard)*	*ASE...N0 -Environmental*	*P - Pin* *S - Socket*	

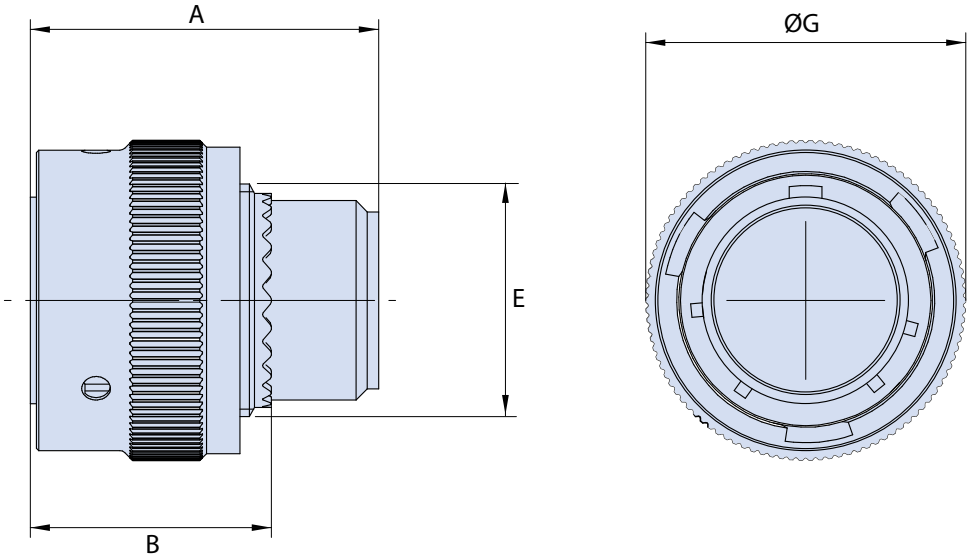

Application Notes

1. Straight plug connector without backshell.
2. Connector Class "ASE...NO"(environmental)
3. Standard materials configuration consists of aluminum alloy.
4. Standard contact material consists of copper alloy with gold plating over nickel.
5. A broad range of other front and rear connector accessories are available. See our website and/or contact factory for complete information.
6. Standard insert is high insulation synthetic rubber.

© 2015 Glenair, Inc. U.S. CAGE Code 06324 Printed in Italy

Downloaded from Arrow.com.

IPT 06 ASE...N0
Straight Plug Connector
without Backshell

Glenair®

TABLE I: DIMENSIONS

Shell size	A ±0.5	ØG ±0.2	B ±0.2	E
8	31.7	18.10	21.4	.4375 - 28 UNEF
10	31.7	21.05	21.4	.5625 - 24 UNEF
12	31.7	25.15	21.4	.6875 - 24 UNEF
14	32.7	28.40	21.4	.8125 - 20 UNEF
16	31.7	31.60	21.4	.9375 - 20 UNEF
18	31.7	35.00	21.4	1.0625 - 18 UNEF
20	31.7	37.70	25.4	1.1875 - 18 UNEF
22	31.7	40.20	25.4	1.3125 - 18 UNEF
24	33.7	44.00	27.0	1.4375 - 18 UNEF

TABLE II: MODIFICATION CODES

CONTACT OPTIONS	
Sym	**Description**
B0	Connector Without Contacts (Only for crimp version)
FINISH OPTIONS	
Sym	**Description and RoHS compliant**
F6	Black Electrodeposited Paint
F7	Black Zinc Nickel
F11	Electroless Nickel
MB	Marine Bronze
Omit for standard version (Cadmium Olive Drab Finish)	

© 2015 Glenair, Inc.

Downloaded from Arrow.com.

IPT 06 SE...SR
Straight Plug Connector
with Backshell, Cable Clamp and Bushing

Polychloroprene Insert	Connector Shell Styles	Shell Size and Insert Arrangement	Alternate Insert Rotation	Mod. Code Options
	06 - Straight Plug Connector		*W, X, Y, Z (Omit for Normal)*	*See Table II*

IPT	G	06	SE	18-11	P	Z	SR	XX

SIPT	Grounding Fingers	Environmental Class	Contact Gender	Cable Clamp with Bushing
Silicone Insert	*(Omit for Strandard)*	*SE...SR - Environmental*	*P - Pin* *S - Socket*	

B

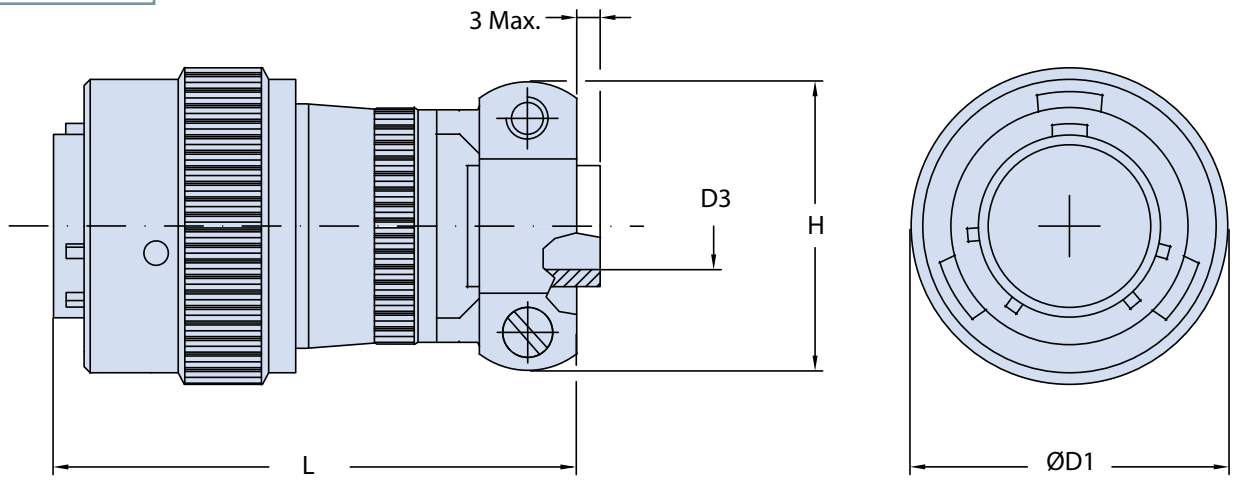

Application Notes

1. Straight plug with cable clamp and bushing for cable protection.
2. Connector Class "SE...SR"(environmental).
3. Standard materials configuration consists of aluminum alloy.
4. Standard contact material consists of copper alloy with gold plating over nickel.
5. A broad range of other front and rear connector accessories are available. See our website and/or contact factory for complete information.
6. Standard insert is high insulation synthetic rubber.

© 2015 Glenair, Inc. U.S. CAGE Code 06324 Printed in Italy

Downloaded from Arrow.com.

IPT 06 SE...SR
Straight Plug Connector
with Backshell, Cable Clamp and Bushing

Glenair®

TABLE I: DIMENSIONS

Shell size	ØD1 ±0.2	D3 + 0.3 - 0.7	H ± 0.2	L Max.
8	18.10	3.2	19.10	49.5
10	21.05	4.8	20.70	49.5
12	25.15	7.9	23.90	49.5
14	28.40	9.5	27.00	49.5
16	31.60	12.7	28.60	53.0
18	35.00	15.9	35.00	53.0
20	37.70	15.9	35.00	59.0
22	40.20	19.1	39.75	59.0
24	44.00	20.3	42.10	61.0

TABLE II: MODIFICATION CODES

CONTACT OPTIONS	
Sym	**Description**
B0	Connector Without Contacts (Only for crimp version)
FINISH OPTIONS	
Sym	**Description and RoHS compliant**
F6	Black Electrodeposited Paint
F7	Black Zinc Nickel
F11	Electroless Nickel
MB	Marine Bronze
Omit for standard version (Cadmium Olive Drab Finish)	

© 2015 Glenair, Inc.

GLENAIR, INC. • 1211 AIR WAY • GLENDALE, CA 91201-2497 • 818-247-6000 • FAX 818-500-9912
www.glenair.com **E-Mail: sales@glenair.com**

Downloaded from Arrow.com.

IPT 06 GSE
Straight Plug Connector
with Shrink Boot Backshell

Polychloroprene Insert

Connector Shell Styles
06 - Straight Plug Connector

Shell Size and Insert Arrangement

Alternate Insert Rotation
W, X, Y, Z
(Omit for Normal)

IPT	G	06	GSE	18-11	P	Z	XX

SIPT
Silicone Insert

Grounding Fingers
(Omit for Strandard)

Environmental Class
GSE - Environmental

Contact Gender
P - Pin
S - Socket

Mod. Code Options
See Table II

B

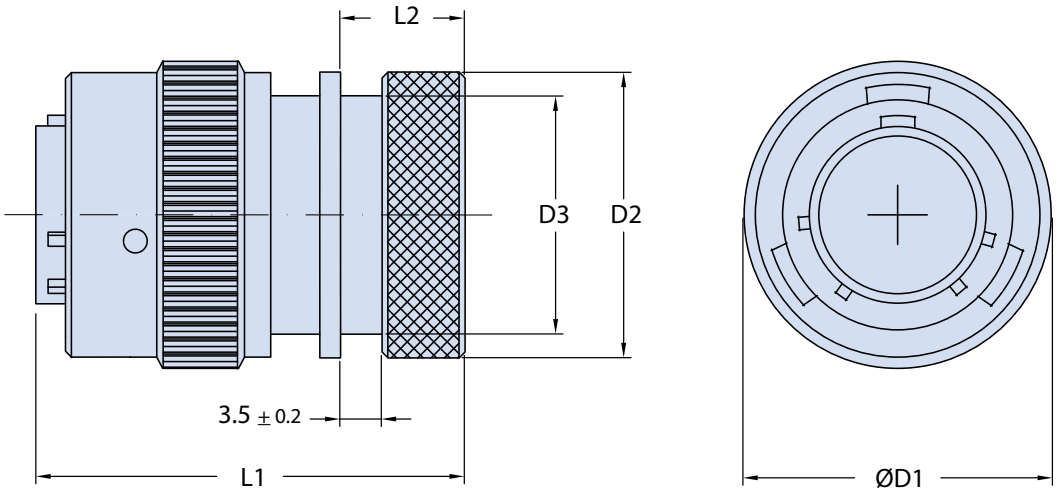

Application Notes

1. Straight plug connector with shrink boot backshell.
2. Connector Class "GSE" (environmental).
3. Standard materials configuration consists of aluminum alloy.
4. Standard contact material consists of copper alloy with gold plating over nickel.
5. A broad range of other front and rear connector accessories are available. See our website and/or contact factory for complete information.
6. Standard insert is high insulation synthetic rubber.

© 2015 Glenair, Inc. U.S. CAGE Code 06324 Printed in Italy

Downloaded from Arrow.com.

IPT 06 GSE
Straight Plug Connector
with Shrink Boot Backshell

Glenair®

TABLE I: DIMENSIONS

Shell size	ØD1 ±0.2	D2 + 0 - 0.5	D3 + 0 - 0.5	L1 Max.	L2 ± 0.5
8	18.10	15.6	13.3	43.5	12.2
10	21.05	18.4	16.1	42.0	12.2
12	25.15	23.7	21.4	42.0	12.2
14	28.40	24.5	22.2	42.0	12.2
16	31.60	29.8	26.2	44.0	14.5
18	35.00	32.0	28.5	44.5	14.5
20	37.70	36.1	32.5	47.0	15.8
22	40.20	38.5	34.8	47.0	15.8
24	44.00	41.6	37.9	47.0	14.9

TABLE II: MODIFICATION CODES

CONTACT OPTIONS	
Sym	**Description**
B0	Connector Without Contacts (Only for crimp version)
FINISH OPTIONS	
Sym	**Description and RoHS compliant**
F6	Black Electrodeposited Paint
F7	Black Zinc Nickel
F11	Electroless Nickel
MB	Marine Bronze
Omit for standard version (Cadmium Olive Drab Finish)	

© 2015 Glenair, Inc.

Downloaded from Arrow.com.

IPT 06 MSE
Straight Plug Connector
with Backshell Suitable for EMI Shield Termination and Heat Shrink Boot

IPT	G	06	MSE	18-11	P	Z	XX

- **IPT** — Polychloroprene Insert
- **SIPT** — Silicone Insert
- **G** — Grounding Fingers (Omit for Strandard)
- **06** — Connector Shell Styles: *06 - Straight Plug Connector*
- **MSE** — Environmental Class: *MSE - Environmental*
- **18-11** — Shell Size and Insert Arrangement
- **P** — Contact Gender: *P - Pin*, *S - Socket*
- **Z** — Alternate Insert Rotation: *W, X, Y, Z (Omit for Normal)*
- **XX** — Mod. Code Options: *See Table II*

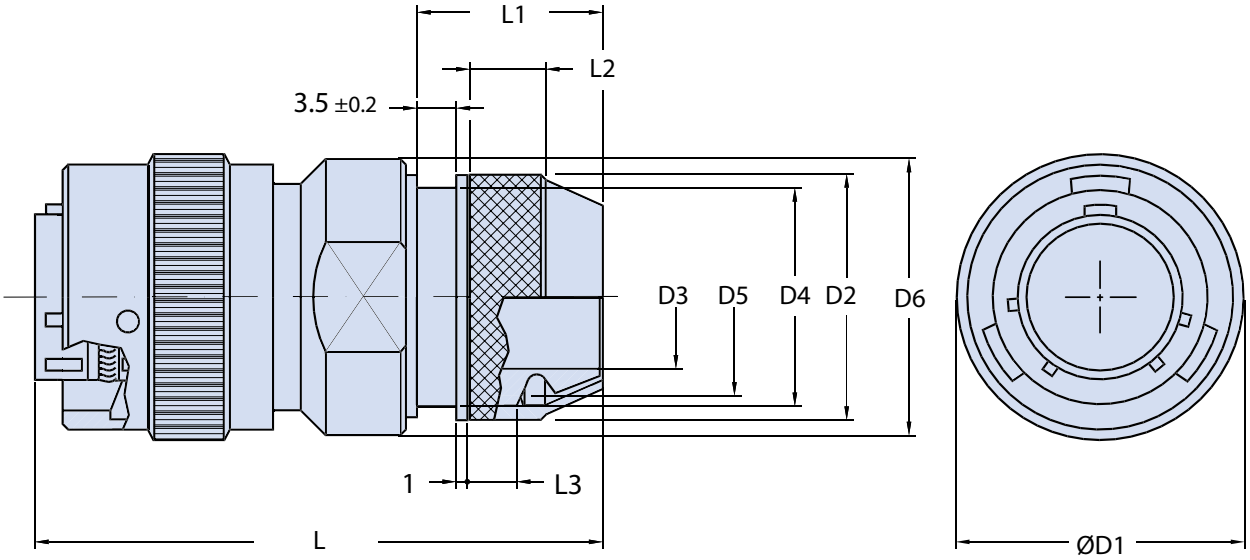

Application Notes

1. Straight plug connector with shrink boot backshell.
2. Connector Class "MSE" (environmental).
3. Standard materials configuration consists of aluminum alloy.
4. Standard contact material consists of copper alloy with gold plating over nickel.
5. A broad range of other front and rear connector accessories are available. See our website and/or contact factory for complete information.
6. Standard insert is high insulation synthetic rubber.

© 2015 Glenair, Inc. U.S. CAGE Code 06324 Printed in Italy

Downloaded from Arrow.com.

IPT 06 MSE
Straight Plug Connector
with Backshell Suitable for
EMI Shield Termination and Heat Shrink Boot

Glenair®

TABLE I: DIMENSIONS

Shell size	ØD1 ±0.2	D2 + 0.5 - 0	D3 Min.	D4	D5	D6 Max.	L	L1 + 0 - 2.5	L2 +1.5 - 0	L3 Min.
8	18.10	16	6.6	13.5	M14 x 1	20	55	17	5	4
10	21.05	18	9.2	16.0	M16 x 1	23	55	17	5	4
12	25.15	22	12.2	20.0	M20 x 1	27	55	17	7	5
14	28.40	25	15.2	22.0	M23 x 1	30	56	18	8	6
16	31.60	28	18.3	26.0	M26 x 1	33	56	18	8	6
18	35.00	32	20.0	28.2	M30 x 1	36	56	18	10	6
20	37.70	34	23.0	30.5	M32 x 1	40	60	18	10	6
22	40.20	38	26.0	34.5	M36 x 1	43	60	18	10	6
24	44.00	41	28.8	37.2	M39 x 1	46	62	18	10	6

TABLE II: MODIFICATION CODES

CONTACT OPTIONS	
Sym	**Description**
B0	Connector Without Contacts (Only for crimp version)
FINISH OPTIONS	
Sym	**Description and RoHS compliant**
F7	Black Zinc Nickel
F11	Electroless Nickel
MB	Marine Bronze
Omit for standard version (Cadmium Olive Drab Finish)	

© 2015 Glenair, Inc.

Downloaded from Arrow.com.

IPT 07 SE
Jam Nut Receptacle
with General Duty Backshell

IPT	07	SE	18-11	P	Z	XX

Polychloroprene Insert

Connector Shell Styles
07 - Jam Nut Receptacle

Shell Size and Insert Arrangement

Alternate Insert Rotation
W, X, Y, Z
(Omit for Normal)

SIPT
Silicone Insert

Environmental Class
SE - Environmental

Contact Gender
P - Pin
S - Socket

Mod. Code Options
See Table II

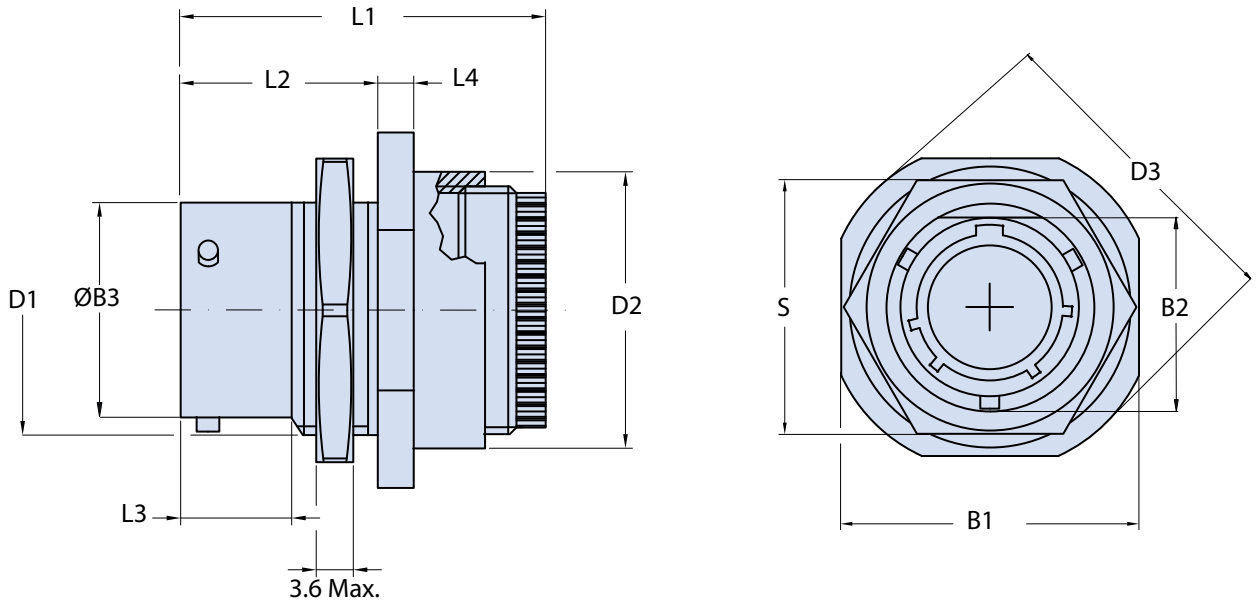

Application Notes

1 Jam nut receptacle includes sealing grommet and backshell for use with individual wires.
2 Connector Class "SE" (environmental). Wire sealing grommet supplied.
3 Standard materials configuration consists of aluminum alloy with stainless steel coupling pins.
4. Standard contact material consists of copper alloy with gold plating over nickel.
5. A broad range of other front and rear connector accessories are available. See our website and/or contact factory for complete information.
6. Standard insert is high insulation synthetic rubber.

© 2015 Glenair, Inc. U.S. CAGE Code 06324 Printed in Italy

Downloaded from Arrow.com.

IPT 07 SE
Jam Nut Receptacle
with General Duty Backshell

TABLE I: DIMENSIONS

Shell size	B1 Max.	B2 + 0 - 0.25	ØB3 + 0 - 0.1	D1	D2 Min.	D3 + 0 - 0.8	L1 Max.	L2 + 0.8 - 0	L3 Min.	L4 ± 0.5	S ± 0.43
8	24.3	13.46	12.00	0.5625 - 24 UNEF	19.0	27.3	39.3	17.5	9.75	3.0	19.05
10	27.4	16.64	14.98	0.6875 - 24 UNEF	22.2	30.5	39.3	17.5	9.75	3.0	22.23
12	32.2	20.78	19.05	0.8750 - 20 UNEF	25.4	35.3	39.3	17.5	9.75	3.0	26.97
14	35.4	23.93	22.22	1.0000 - 20 UNEF	28.5	38.5	39.3	17.5	9.75	3.0	30.18
16	38.6	27.08	25.40	1.1250 - 18 UNEF	31.7	41.6	39.3	17.5	9.75	3.0	33.32
18	41.7	30.25	28.57	1.2500 - 18 UNEF	34.9	44.8	39.3	17.5	9.75	3.0	36.53
20	46.5	33.43	31.75	1.3750 - 18 UNEF	38.8	49.6	43.4	22.3	11.32	3.8	39.67
22	49.7	36.60	34.85	1.5000 - 18 UNEF	42.0	52.7	43.4	22.3	11.32	3.8	42.88
24	52.8	39.78	38.10	1.6250 - 18 UNEF	45.2	55.9	43.4	23.1	12.16	3.8	46.02

TABLE II: MODIFICATION CODES

CONTACT OPTIONS	
Sym	**Description**
B0	Connector Without Contacts (Only for crimp version)
FINISH OPTIONS	
Sym	**Description and RoHS compliant**
F6	Black Electrodeposited Paint
F7	Black Zinc Nickel
F11	Electroless Nickel
MB	Marine Bronze
Omit for standard version (Cadmium Olive Drab Finish)	

© 2015 Glenair, Inc.

GLENAIR, INC. • 1211 AIR WAY • GLENDALE, CA 91201-2497 • 818-247-6000 • FAX 818-500-9912
www.glenair.com **E-Mail: sales@glenair.com**

Downloaded from Arrow.com.

IPT 07 SE...SR
Jam Nut Receptacle
Connector and Backshell with Cable Clamp and Bushing

Polychloroprene Insert

Connector Shell Styles
07 - Jam Nut Receptacle

Shell Size and Insert Arrangement

Alternate Insert Rotation
W, X, Y, Z
(Omit for Normal)

Mod. Code Options
See Table II

IPT | 07 | SE | 18-11 | P | Z | SR | XX

SIPT

Environmental Class
SE...SR - Environmental

Contact Gender
P - Pin
S - Socket

Cable Clamp with Bushing

Silicone Insert

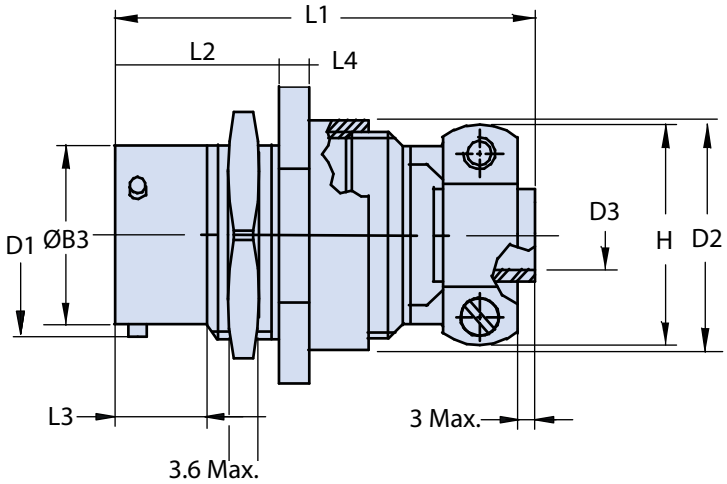

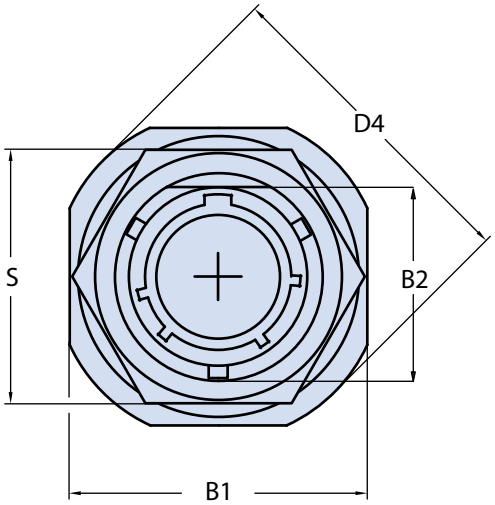

Application Notes

1. Jam nut receptacle connector with shrink boot backshell.
2. Connector/Backshell Class "SE...SR" (environmental).
3. Standard materials configuration consists of aluminum alloy with stainless steel coupling pins.
4. Standard contact material consists of copper alloy with gold plating over nickel.
5. A broad range of other front and rear connector accessories are available. See our website and/or contact factory for complete information.
6. Standard insert is high insulation synthetic rubber.

© 2015 Glenair, Inc. U.S. CAGE Code 06324 Printed in Italy

Downloaded from Arrow.com.

IPT 07 SE...SR
Jam Nut Receptacle
Connector and Backshell with Cable Clamp and Bushing

TABLE I: DIMENSIONS

Shell size	B1 Max.	B2 +0 -0.25	ØB3 + 0 - 0.1	D1	D2 Min.	D3 + 0.3 - 0.7	D4 + 0 - 0.8	H ± 0.2	L1 Max.	L2 + 0.8 - 0	L3 Min.	L4 ±0.15	S ±0.43
8	24.3	13.46	12.00	0.5625 - 24 UNEF	19.0	3.2	27.3	19.10	61.5	17.5	9.75	3.0	19.05
10	27.4	16.64	14.98	0.6875 - 24 UNEF	22.2	4.8	30.5	20.70	61.5	17.5	9.75	3.0	22.23
12	32.2	20.78	19.05	0.8750 - 20 UNEF	25.4	7.9	35.3	23.90	61.5	17.5	9.75	3.0	26.97
14	35.4	23.93	22.22	1.0000 - 20 UNEF	28.5	9.5	38.5	27.00	61.5	17.5	9.75	3.0	30.18
16	38.6	27.08	25.40	1.1250 - 18 UNEF	31.7	12.7	41.6	28.60	64.4	17.5	9.75	3.0	33.32
18	41.7	30.25	28.57	1.2500 - 18 UNEF	34.9	15.9	44.8	35.00	64.4	17.5	9.75	3.0	36.53
20	46.5	33.43	31.75	1.3750 - 18 UNEF	38.8	15.9	49.6	35.00	71.1	22.3	11.32	3.8	39.67
22	49.7	36.60	34.85	1.5000 - 18 UNEF	42.0	19.1	52.7	39.75	71.1	22.3	11.32	3.8	42.88
24	52.8	39.78	38.10	1.6250 - 18 UNEF	45.2	20.3	55.9	42.10	73.6	23.1	12.16	3.8	46.02

TABLE II: MODIFICATION CODES

CONTACT OPTIONS	
Sym	**Description**
B0	Connector Without Contacts (Only for crimp version)
FINISH OPTIONS	
Sym	**Description and RoHS compliant**
F6	Black Electrodeposited Paint
F7	Black Zinc Nickel
F11	Electroless Nickel
MB	Marine Bronze
Omit for standard version (Cadmium Olive Drab Finish)	

© 2015 Glenair, Inc.

Downloaded from Arrow.com.

IPT 07 GSE
Jam Nut Receptacle
with Shrink Boot Backshell

Polychloroprene Insert

Connector Shell Styles
07 - Jam Nut Receptacle

Shell Size and Insert Arrangement

Alternate Insert Rotation
W, X, Y, Z
(Omit for Normal)

IPT | 07 | GSE | 18-11 | P | Z | XX

SIPT

Environmental Class
GSE - Environmental

Contact Gender
P - Pin
S - Socket

Mod. Code Options
See Table II

Silicone Insert

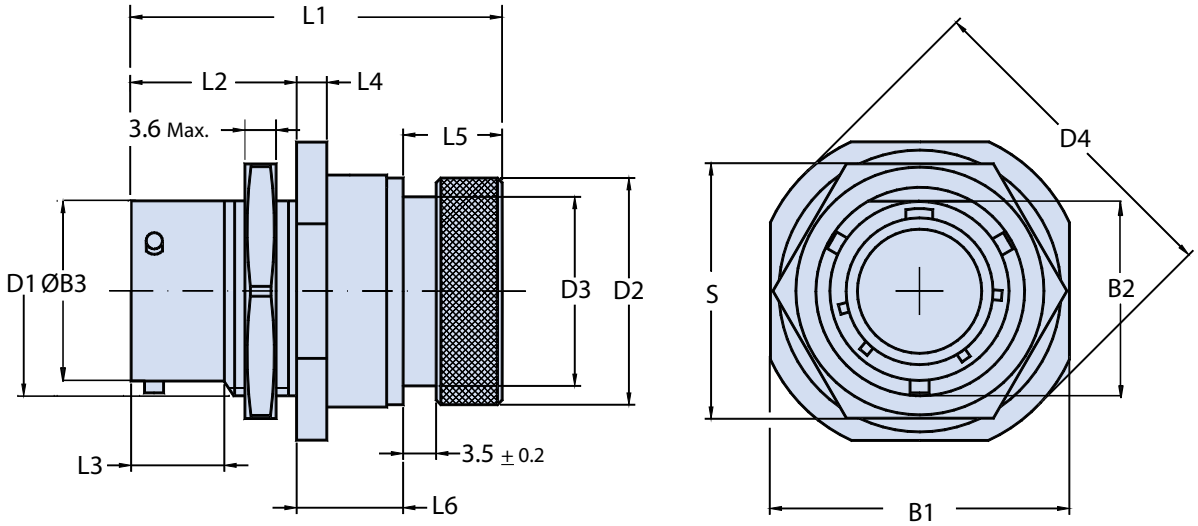

Application Notes

1. Jam nut receptacle connector with shrink boot backshell.
2. Connector/Backshell Class "GSE" (environmental).
3. Standard materials configuration consists of aluminum alloy with stainless steel coupling pins.
4. Standard contact material consists of copper alloy with gold plating over nickel.
5. A broad range of other front and rear connector accessories are available. See our website and/or contact factory for complete information.
6. Standard insert is high insulation synthetic rubber.

© 2015 Glenair, Inc. U.S. CAGE Code 06324 Printed in Italy

Downloaded from Arrow.com.

IPT 07 GSE
Jam Nut Receptacle
with Shrink Boot Backshell

Glenair®

TABLE I: DIMENSIONS

Shell size	B1 Max.	B2 + 0 - 0.25	ØB3 + 0 - 0.1	D1	D2 + 0 - 0.2	D3 + 0 - 0.2	D4 + 0 - 0.8	L1 Max.	L2 + 0.8 - 0	L3 Min.	L4 ± 0.5	L5 ± 0.1	L6 ± 0.2	S ± 0.43
8	24.3	13.46	12.00	0.5625-24UNEF	15.6	13.3	27.3	47.0	17.5	9.75	3.0	12.2	10.8	19.05
10	27.4	16.46	14.98	0.6875-24UNEF	18.2	16.0	30.5	47.0	17.5	9.75	3.0	12.2	11.0	22.23
12	32.2	20.78	19.05	0.8750-20UNEF	23.7	21.4	35.3	47.0	17.5	9.75	3.0	12.2	10.8	26.97
14	35.4	23.93	22.22	1.0000-20UNEF	24.5	22.2	38.5	49.0	17.5	9.75	3.0	12.2	10.8	30.18
16	38.6	27.08	25.40	1.1250-18UNEF	29.8	26.2	41.6	49.0	17.5	9.75	3.0	14.5	10.8	33.32
18	41.7	30.25	28.57	1.2500-18UNEF	32.0	28.5	44.8	49.0	17.5	9.75	3.0	14.5	10.8	36.53
20	46.5	33.43	31.75	1.3750-18UNEF	36.1	32.5	49.6	57.0	22.3	11.32	3.8	15.8	12.6	39.67
22	49.7	36.60	34.85	1.5000-18UNEF	38.5	34.8	52.7	57.0	22.3	11.32	3.8	15.8	12.6	42.88
24	52.8	39.78	38.10	1.6250-18UNEF	41.6	37.9	55.9	57.0	23.1	12.16	3.8	14.9	12.8	46.02

TABLE II: MODIFICATION CODES

CONTACT OPTIONS	
Sym	**Description**
B0	Connector Without Contacts (Only for crimp version)
FINISH OPTIONS	
Sym	**Description and RoHS compliant**
F6	Black Electrodeposited Paint
F7	Black Zinc Nickel
F11	Electroless Nickel
MB	Marine Bronze
Omit for standard version (Cadmium Olive Drab Finish)	

© 2015 Glenair, Inc.

Downloaded from Arrow.com.

IPT 07 MSE
Jam Nut Receptacle
with Backshell
for EMI Shield Termination and Shrink Boot

Polychloroprene Insert

Connector Shell Styles
07 - Jam Nut Receptacle

Shell Size and Insert Arrangement

Alternate Insert Rotation
W, X, Y, Z
(Omit for Normal)

IPT 07 MSE 18-11 P Z XX

SIPT

Environmental Class
MSE - Environmental

Contact Gender
P - Pin
S - Socket

Mod. Code Options
See Table II

Silicone Insert

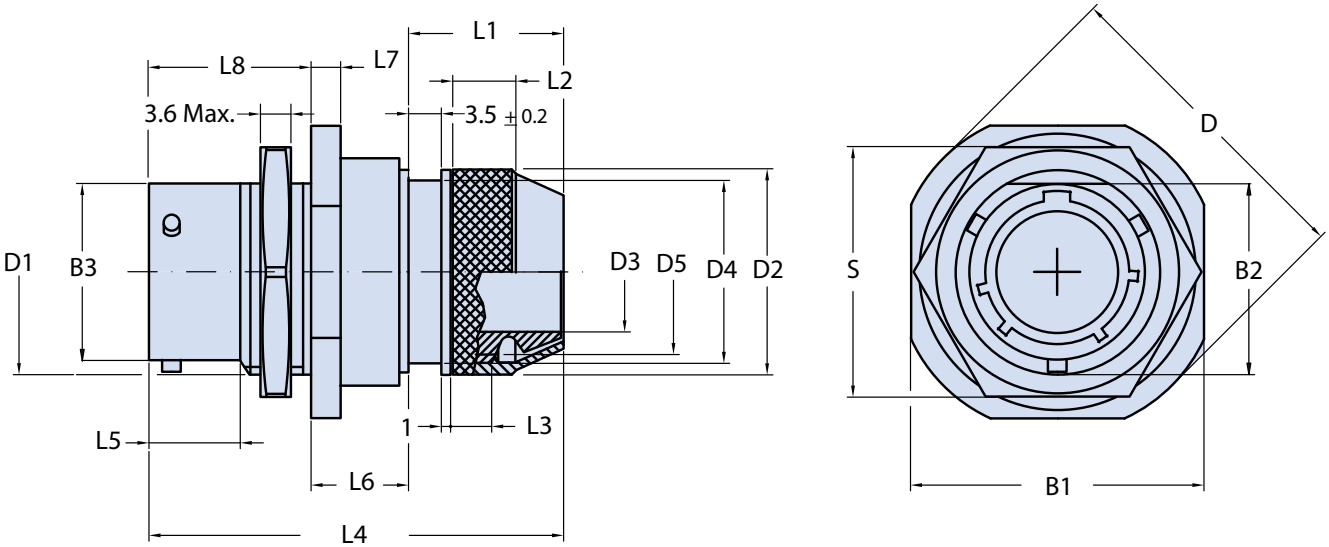

Application Notes

1. Jam nut receptacle with EMI shield termination / shrink boot backshell
2. Connector Class "MSE" (environmental).
3. Standard materials configuration consists of aluminum alloy with stainless steel coupling pins.
4. Standard contact material consists of copper alloy with gold plating over nickel.
5. Standard insert is high insulation synthetic rubber.

© 2015 Glenair, Inc. U.S. CAGE Code 06324 Printed in Italy

Downloaded from Arrow.com.

IPT 07 MSE
Jam Nut Receptacle
with Backshell
for EMI Shield Termination and Shrink Boot

TABLE I: DIMENSIONS

Shell Size	B1 Max.	B2 + 0 - 0.25	ØB3 + 0 - 0.1	D1	D + 0 - 0.8	L4 Max.	L5 Min.	L6 ± 0.2	L7 ± 0.5	L8 + 0.8 - 0	S ±0.43
8	24.3	13.46	12.00	.5625 - 24 UNEF	27.3	52	9.75	10.8	3.0	17.5	19.05
10	27.4	16.64	14.98	.6875 - 24 UNEF	30.5	52	9.75	11.0	3.0	17.5	22.23
12	32.2	20.78	19.05	.8750 - 20 UNEF	35.3	52	9.75	10.8	3.0	17.5	26.97
14	35.4	23.93	22.22	1.0000 - 20 UNEF	38.5	53	9.75	10.8	3.0	17.5	30.18
16	38.6	27.08	25.40	1.1250 - 18 UNEF	41.6	53	9.75	10.8	3.0	17.5	33.32
18	41.7	30.25	28.57	1.2500 - 18 UNEF	44.8	53	9.75	10.8	3.0	17.5	36.53
20	46.5	33.43	31.75	1.3750 - 18 UNEF	49.6	57	11.32	12.6	3.8	22.3	39.67
22	49.7	36.60	34.85	1.5000 - 18 UNEF	52.7	59	11.32	12.6	3.8	22.3	42.88
24	52.8	39.78	38.10	1.6250 - 18 UNEF	55.9	60	12.16	12.8	3.8	23.1	46.02

For backshell dimensions D2, D3, D4, D5, L1, L2 and L3 please refer to IPT 06 MSE TABLE I: DIMENSIONS at Page B-53

TABLE II: MODIFICATION CODES

CONTACT OPTIONS	
Sym	**Description**
B0	Connector Without Contacts (Only for crimp version)
FINISH OPTIONS	
Sym	**Description and RoHS compliant**
F7	Black Zinc Nickel
F11	Electroless Nickel
MB	Marine Bronze
Omit for standard version (Cadmium Olive Drab Finish)	

© 2015 Glenair, Inc.

Downloaded from Arrow.com.

IPT 08 MSE
90° Plug Connector
with Backshell
for EMI Shield Termination and Shrink Boot

Polychloroprene Insert	Connector Shell Styles			Shell Size and Insert Arrangement		Alternate Insert Rotation	
	08 - 90° Plug connector					*W, X, Y, Z (Omit for Normal)*	
IPT	G	08	MSE	18-11	P	Z	XX
SIPT	Grounding Fingers *(Omit for Strandard)*		Environmental Class *MSE - Environmental*		Contact Gender *P - Pin* *S - Socket*		Mod. Code Options *See Table II*
Silicone Insert							

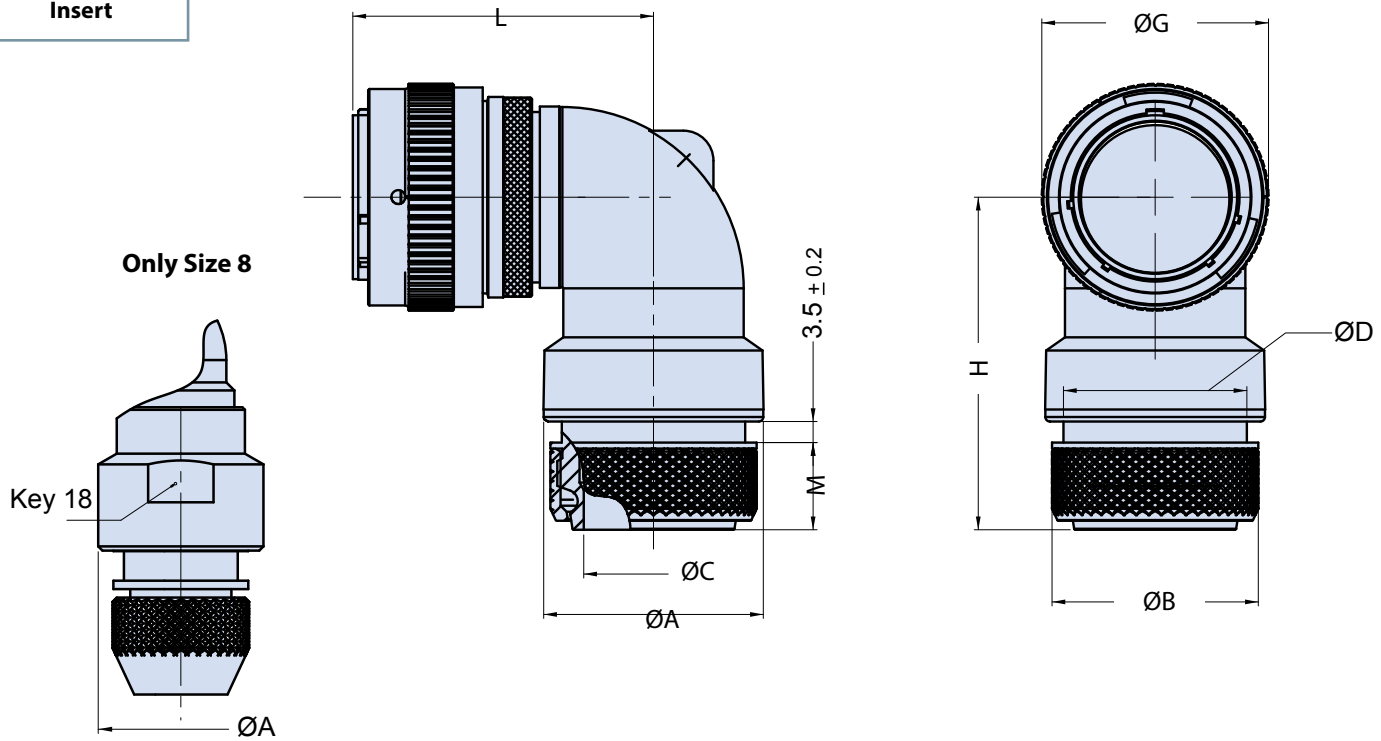

Application Notes

1. Straight plug connector with 90° Backshell.
2. Connector Class "MSE" (environmental).
3. Standard materials configuration consists of aluminum alloy with stainless steel coupling pins.
4. Standard contact material consists of copper alloy with gold plating over nickel.
5. Standard insert is high insulation synthetic rubber.

© 2015 Glenair, Inc. U.S. CAGE Code 06324 Printed in Italy

Downloaded from Arrow.com.

IPT 08 MSE
90° Plug Connector
with Backshell
for EMI Shield Termination and Shrink Boot

TABLE I: DIMENSIONS

Shell Size	ØA ± 0.2	ØB ± 0.2	ØC +0.1/0	ØD 0/-0.2	M ± 0.5	ØG ±0.2	L Max.	H Max.
8	19.6	16.20	6.80	13.50	13.50	18.10	34.50	45.50
10	19.05	18.30	9.30	15.80	12.50	21.05	37.50	45.10
12	22.00	22.30	12.25	19.80	13.50	25.15	37.50	48.00
14	25.50	25.30	15.40	22.60	14.50	28.40	39.20	49.50
16	30.175	28.30	18.50	26.00	14.50	31.60	44.40	52.70
18	30.175	32.30	20.20	28.20	14.50	35.00	46.60	56.60
20	36.60	34.30	23.30	30.50	14.50	37.70	50.50	55.80
22	36.60	38.20	26.00	34.00	14.50	40.20	54.40	59.60
24	44.80	41.30	29.00	37.20	14.50	44.00	55.70	58.60

TABLE II: MODIFICATION CODES

CONTACT OPTIONS	
Sym	**Description**
B0	Connector Without Contacts (Only for crimp version)
FINISH OPTIONS	
Sym	**Description and RoHS compliant**
F7	Black Zinc Nickel
F11	Electroless Nickel
MB	Marine Bronze
Omit for standard version (Cadmium Olive Drab Finish)	

© 2015 Glenair, Inc.

Downloaded from Arrow.com.

SERIES 921

SUPER ITS™

High-performance reverse-bayonet power and signal connectors for harsh application environments

Glenair is one of the world's most experienced manufacturers of reverse-bayonet, 5015 type power and signal connectors. Our ITS series connectors have been used in thousands of industrial, rail, and military applications. Now Glenair has taken this proven reverse-bayonet coupling technology and combined it with next-generation materials and design to create the ultimate high-performance power and signal cylindrical connector. The Series 921 Super ITS™ features vastly improved mechanical, environmental and electrical performance compared to standard-duty 5015 type industrial connectors. From its high-ampacity LouverBand contacts to its high-temperature PTFE inserts, the Super ITS™ is the ultimate power distribution and signal transmission connector for harsh environments.

Glenair®

Glenair Italia S.p.A.
Via del Lavoro, 7.
40057 - Quarto Inferiore
Granarolo dell'Emilia
Bologna - Italy
Tel. +39 051 782811
Fax +39 051 782259
info@glenair.it
www.glenair.it

Downloaded from Arrow.com.

IPT Series

General Duty
Solder and Crimp Contact
MIL-DTL-26482 Serie I
Bayonet Connector

Section C

Bayonet-Lock Signal Connectors (MIL-DTL-26482 Serie I) **Product Line Overview**	**C-2 - C3**
Bayonet-Lock Signal Connectors (MIL-DTL-26482 Serie I) **Styles and Classes**	**C-4 ; C-6**
How to Order • Part Number Breakdown	**C-7**
Cross Section	**C-8**
Technical data	**C-9**
Materials and Finishes	**C-10**
Contact Dimensions	**C-11**
Insert Arrangement Tables and Alternate Inserto Position	**C-12**
Alternate Key Positions	**C-13**
Fastener Height Requirements and Panel Cutout Dimensions	**C-14**
Available Insert Arrangements	**C-15 ; C-17**
IPT Connectors Configurations	**C-18**

C

© 2015 Glenair, Inc. U.S. CAGE Code 06324 Printed in Italy

Downloaded from Arrow.com.

Glenair®

Glenair IPT Series
Bayonet-Lock Signal Connectors (MIL-DTL-26482 Serie I)
Product Line Overview

An Economical Connector Solution for General Electronics, Industrial Controls, Instrumentation and Military Vehicles

Harsh Application Environments

The Glenair Series IPT Bayonet-Lock Signal Connector is ideally suited for all interconnect applications that require a general-duty connector equipped with solder cup contacts and one-piece rubber insert. The bayonet coupling mechanism provides fast and easy mating, especially when the connector is situated in an awkward or hard to reach location. The connector's high resistance to vibration and shock provides foolproof performance in even the most rigorous application environments. Environmental protection to IP67 levels provides additional reliability and the flexibility to specify these rugged connectors in harsh applications such as machine tools and factory automation. Supplied solder cup contacts are gold-plated over nickel. Optional crimp contacts are available, however the Glenair IPT SE series, with its industry standard rear-release crimp contacts and retention clip mechanism is better suited for all high-performance applications that require crimp contacts. Sealing members in the IPT series are made from resilient neoprene rubber. The standard insert material is synthetic rubber. There are 40 different size 12, size 16 and size 20 insert arrangements and nine shell sizes.

Intermateability

The Series IPT Connector is interchangeable and intermateable with the wide range of industry-standard bayonet connectors designed around MIL-DTL-26482 Series I and/or qualified to VG 95328, including VEAM VPT, Amphenol PT, Amphenol Limited G2GB, and ITT Cannon KPT.

C

- Solder Cup Version with Optional Crimp Contacts
- Resilient Environmental Inserts
- Fast, Easy Bayonet Coupling
- 40 Power and Signal Insert Arrangements
- All Shell Styles: Plug, Square Flange, Jam-Nut, etc.
- High Shock and Vibration Resistance
- Pin Counts from 2 to 61; Size #12, #16 and #20 Contacts
- Audible and Visual Coupling Indicators
- Keyed Polarization

© 2015 Glenair, Inc. U.S. CAGE Code 06324 Printed in Italy

Downloaded from Arrow.com.

MIL-C-26482

The Glenair IPT miniature bayonet-lock connector series is based on the MIL-DTL-26482 Series I standard, and shares the same insert arrangements, shell dimensions, supported contacts and electrical performance ratings as MIL-DTL-26482 and VG 95328. The MIL-DTL-26482 type 3-point bayonet coupling mechanism provides easy mating and positive locking resistance to vibration, shock, and other connector de-coupling forces in general duty and environmental interconnect systems such as military and commercial aircraft, medical equipment, industrial controls, factory robotics, intrumentation and other general electronic applications.

Component Materials

IPT connectors are available in aluminum alloy and marine bronze are supplied with a range of popular and RoHs compatible shell plating finishes. Most styles are available in either a basic (A) version as well as an (E) version that ships with a wire sealing grommet for additional environmental protection. Our F6,F7 and F11 platings are RoHs compliant.

EMI and Environmental Applications

IPT Series connectors are perfectly suited for use in rugged applications where EEC compliance directives for electromagnetical compatibility is required. A complete range of EMI shield termination accessories are available for both overall as well as individual wire shields.

Equipped with the appropriate backshells and environmental sealing, the connectors are submersible for 48 hours up to a depth of two meters.

Connector Accessories

Many of the IPT Series connectors come standard already paired with selected backshell accessories for most application requirements. See the accessory descriptions on the opposite page for more information. A full range of additional connector accessories including dustcaps and EMI gaskets are also available.

Please contact the factory for additional information or any of our worldwide sales and engineering facilities. Glenair's website, www.glenair.com also has complete information on these products, as well as other ruggedized power and signal connectors.

© 2015 Glenair, Inc. U.S. CAGE Code 06324 Printed in Italy

Downloaded from Arrow.com.

Glenair IPT Series
Bayonet-Lock Signal Connectors (MIL-DTL-26482 Serie I)
Styles and Classes

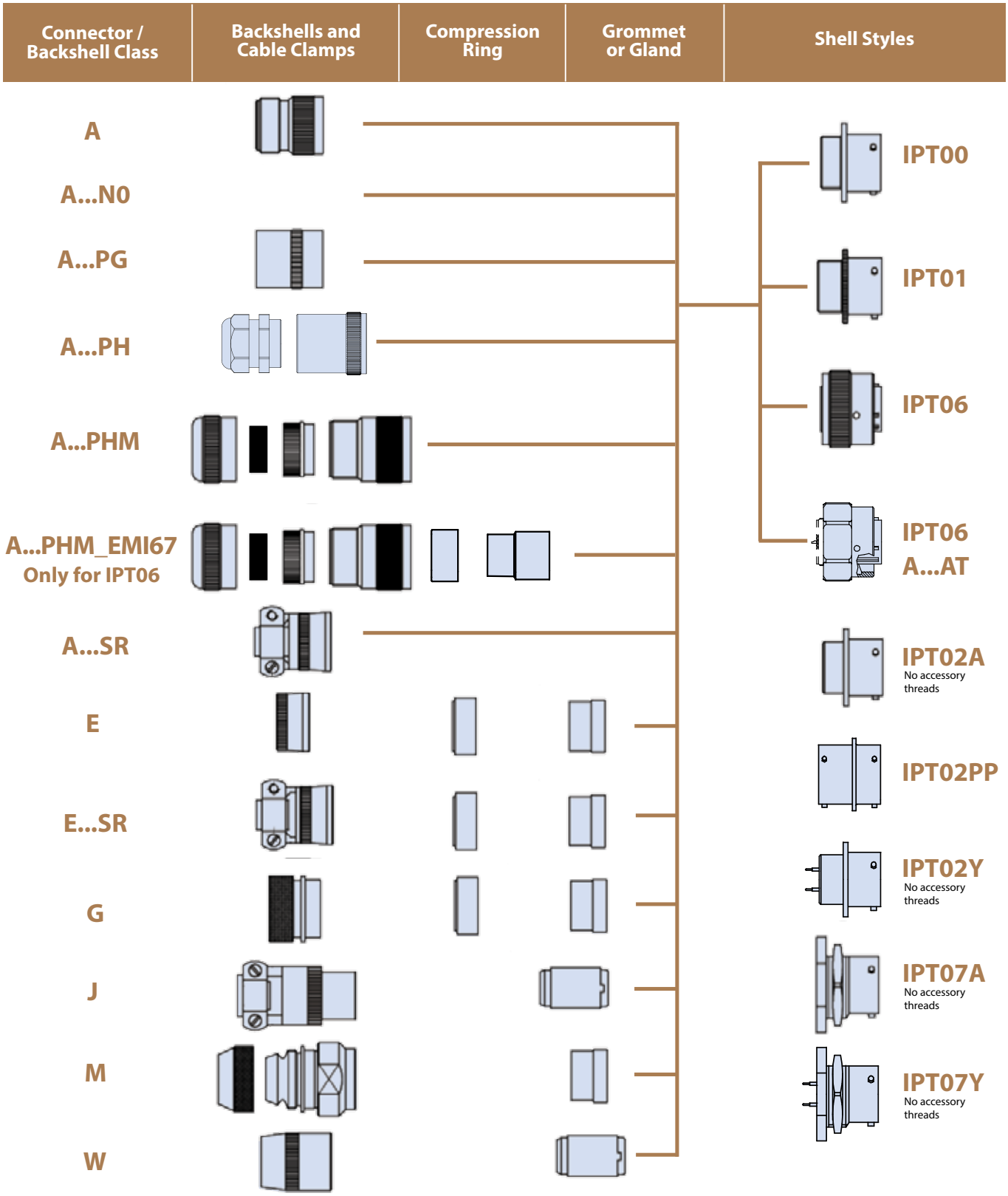

© 2015 Glenair, Inc. U.S. CAGE Code 06324 Printed in Italy

Downloaded from Arrow.com.

Glenair IPT Series
Bayonet-Lock Signal Connectors (MIL-DTL-26482 Serie I)
Styles and Classes

Connector / Backshell Class	Backshells and Cable Clamps	Compression Ring	Grommet or Gland	Shell Styles

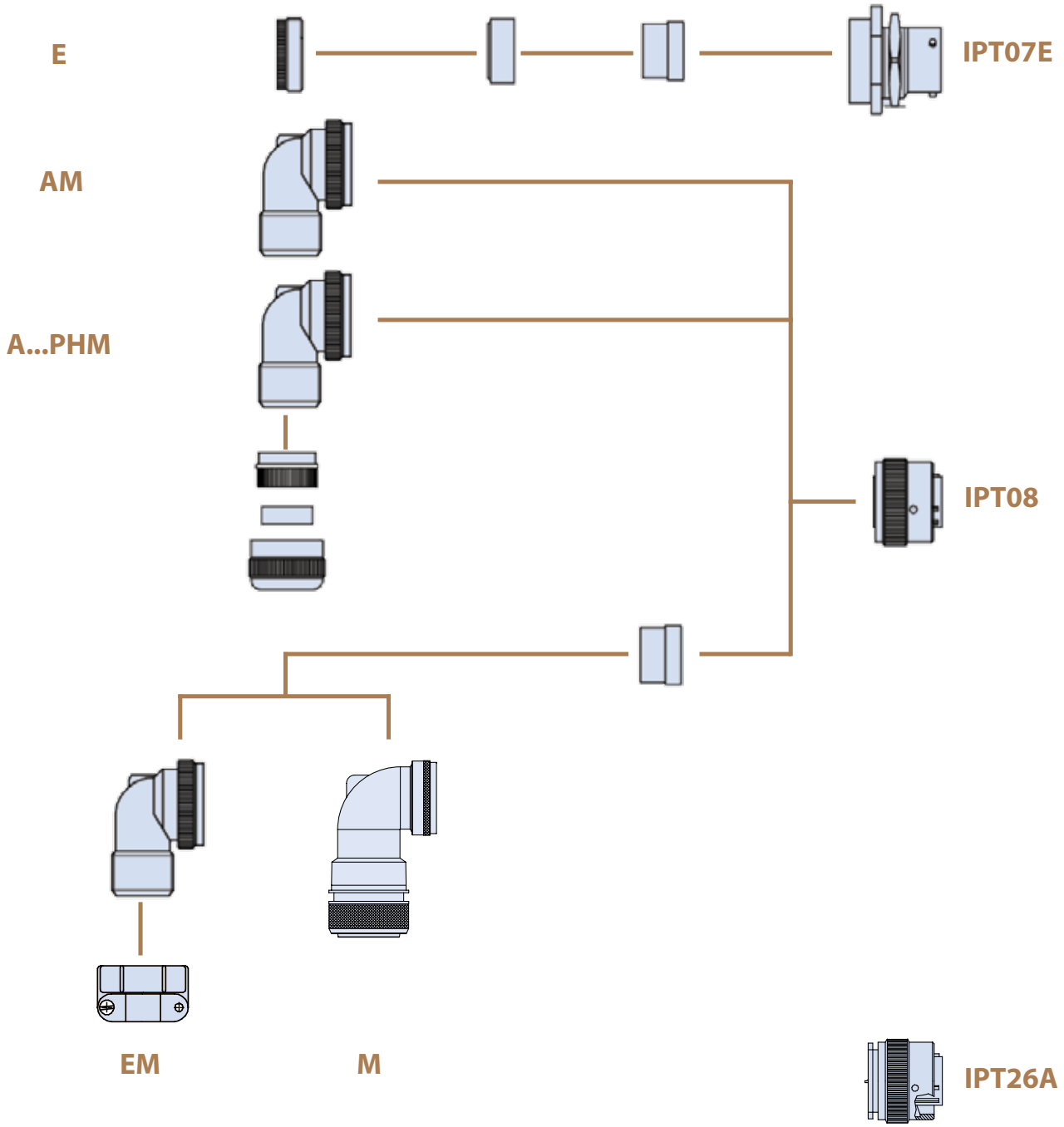

© 2015 Glenair, Inc.
U.S. CAGE Code 06324
Printed in Italy

GLENAIR, INC. • 1211 AIR WAY • GLENDALE, CA 91201-2497 • 818-247-6000 • FAX 818-500-9912
www.glenair.com
E-Mail: sales@glenair.com

Downloaded from Arrow.com.

Glenair IPT Series
Bayonet-Lock Signal Connectors (MIL-DTL-26482 Serie I)
Styles and Classes

Glenair IPT Series products are typically supplied in termination assemblies that include the chosen style of connector together with a specific backshell accessory.

A: For general-duty applications. This non-environmental connector-backshell assembly is supplied with a general-duty backshell for the attachment of additional accessories such as MS 3057 cable clamps (ordered separately). Non-environmental: no grommet supplied.

A...N0 For general-duty applications. This non-environmental connector is supplied with rear threads for the attachment of additional backshell (ordered separately).
A...PG: Straight plug with PG threaded backshell for attachment of PG cable glands in compliance with DIN 40430 (not included).

A...PH: Straight plug with backshell and plastic cable glands.

A...PHM: Connector with quick and easy to assemble PHM cable gland backshell. Supplied with different diameter sleeves to accommodate varying cable sizes.

A...SR: Same as class A, but with cable clamp and bushing for cable protection.

E: For general-duty environmental applications using individual wires. Environmental sealing is provided through an individual wire sealing grommet in the connector. No cable clamp supplied.

E...SR: Same as class E, but with cable clamp and bushing for cable protection.

G: Plug with straight backshell for heatshrink boot.

J: Same as class W, but with cable clamp for improved strain relief.

M: Plug with removable backshell for screen termination and heatshrink boot.

W: Long backshell to ease assembly. Incorporates metal sleeve and gland seal to provide overall cable sealing for improved environmental protection. No cable clamp provided.

AM: Non-environmental with 90° backshell.

EM: Environmental (rear wire sealing grommet) 90° backshell with cable clamp.

A...PHM EMI67: Watertight connector and PHM cable gland backshell, resistant to IP67, suitable for EMI shielded cables. Supplied with different diameter sleeves to accomodate varying cable diameters.

© 2015 Glenair, Inc. U.S. CAGE Code 06324 Printed in Italy

Downloaded from Arrow.com.

Glenair IPT Series
Bayonet-Lock Signal Connectors (MIL-DTL-26482 Serie I)
How to Order • Part Number Breakdown

Environmental Class

A, AM **-** Indicates the Supplied Connector/Backshell Assembly Does Not Include a Wire Sealing Grommet

E, G, M, EM **-** Indicates the Supplied Connector/ Backshell Assembly Includes a Wire Sealing Grommet

W, J **-** Indicates the Supplied Connector/Backshell Assembly Includes an Overall Cable Sealing Gland

Accessory Description*

PG **-** Backshell for Attachment of PG Cable Gland
PH **-** Backshell with Plastic PG Cable Gland
PHM **-** Backshell with PHM Cable Gland
PHM-EMI67 **-** EMI Backshell with PHM Cable Gland and IP67 Level Environmental Sealing
SR **-** Cable Clamp and Bushing
N0 **-** No Backshell of Any Kind Supplied
N0 AT **-** Arctic Coupling Nut Supplied w/out Backshell

****Not Used When Environmental Class Code Incorporates the Backshell Description—See Individual Catalog Pages for Details***

Alternate Key Position*
B, C, E, F
(Omit for N)

Polychloroprene Insert

Alternate Rotation
(Omit for Normal)

Contact Type
C - Crimp
(Omit for Solder Cup)

IPT	G	B	06	A	18-11	P	X	C	SR	XX

SIPT

Silicone Insert

Plug Grounding Fingers
Omit for Standard

Shell Size and Insert Arrangement

Contact Gender
P - Pin
S - Socket

Mod Code Options

F6 - Black Electro-deposited Paint (RoHs)
F7 - Black Zn-Ni Plating (RoHs)
F11 - Electroless Nickel (RoHs)
MB - Marine Bronze (RoHs)
(Omit for Standard Finish - Cad/Olive Drab)

Connector Shell Styles

00 **-** Wall Mounting Receptacle with Accessory Threads
01 **-** In-Line Cable Connector with Accessory Threads
02 **-** Box Mounting Receptacle with No Accessory Threads
02PP **-** Through Bulkhead Receptacle
06 **-** Straight Plug Connector with Accessory Threads
07 **-** Rear Box Mount Jam Nut Receptacle
08 **-** 90° Backshell
26 **-** Box Mount Square Flange Plug Connector

***For Alternate Key Positions (Page C-13), please contact the factory.**

© 2015 Glenair, Inc. U.S. CAGE Code 06324 Printed in Italy

GLENAIR, INC. • 1211 AIR WAY • GLENDALE, CA 91201-2497 • 818-247-6000 • FAX 818-500-9912
www.glenair.com E-Mail: sales@glenair.com

Downloaded from Arrow.com.

Glenair IPT Series
Bayonet-Lock Signal Connectors (MIL-DTL-26482 Serie I)
Cross Section

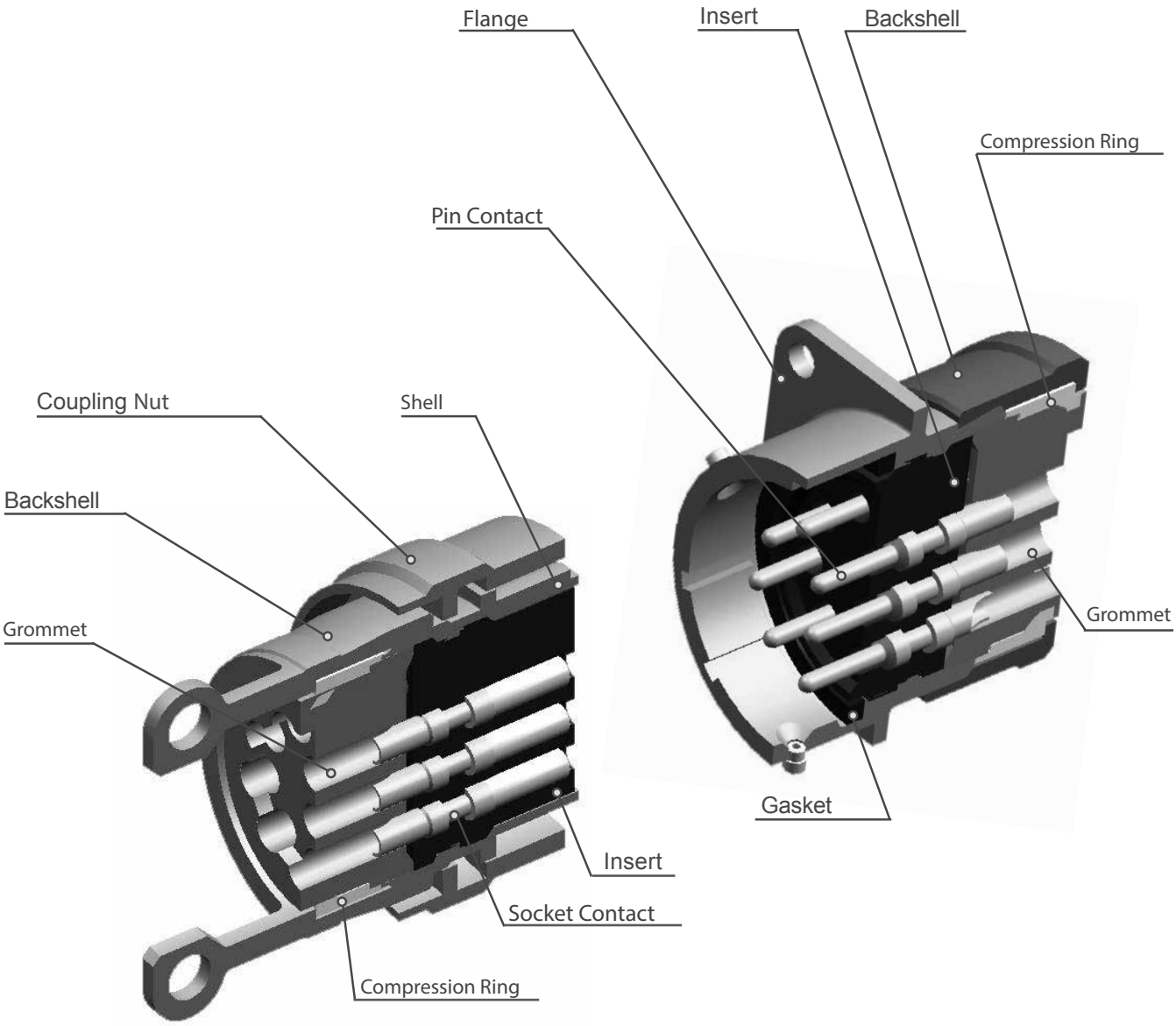

The Glenair IPT miniature bayonet-lock connector series features a 3 point bayonet coupling mating interface with stainless steel coupling pins for advanced durability. Resilient inserts provide outstanding dielectric performance and environmental protection. Individual wire sealing grommets elevate the environmental protection rating to IP67. Conductive metal shells and plating provide a reliable ground plane for EMI applications when connectors are combined with appropriate shield termination backshells. Ground springs are also available in plug versions to further enhance EMC. Shells are keyed with five total alternate key positions. Inserts may also be clocked for additional polarization protection. The connectors are temperature rated from -55°C to +125°C (Polychloroprene) and -55°C to +200°C (Silicone). Standard solder cup contact versions enable direct attachment of wire without the use of specialized crimp tools.

© 2015 Glenair, Inc. U.S. CAGE Code 06324 Printed in Italy

Downloaded from Arrow.com.

Service Rating			
Class	Operating voltage AC	Operating voltage DC	Test voltage AC
I	600	700	1500
II	1000	1250	2300

Potential Drop		
Contact size	Test current	Potential drop
20	7.5 A	55 mV
16	13.0 A	50 mV
12	23 A	50 mV

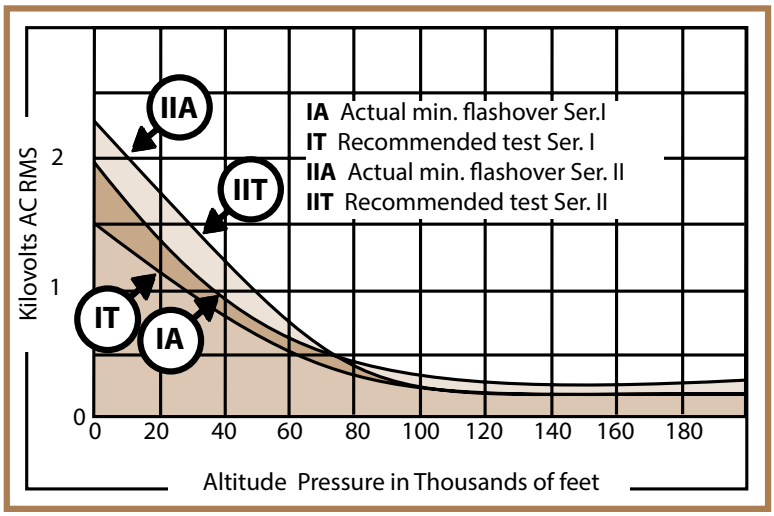

© 2015 Glenair, Inc.

GLENAIR, INC. • 1211 AIR WAY • GLENDALE, CA 91201-2497 • 818-247-6000 • FAX 818-500-9912
www.glenair.com
E-Mail: sales@glenair.com

Downloaded from Arrow.com.

Glenair IPT Series
Bayonet-Lock Signal Connectors (MIL-DTL-26482 Serie I)
Materials and Finishes

MATERIALS	
COMPONENT	**MATERIAL**
Shells	Aluminum Alloy IAW QQ-A-591 Shells Stainless Steel Coupling Pins Stainless Steel Spring
Inserts (Temperature Range)	High Insulation Synthetic Rubber (Chloroprene): -55°C/+125°C
Contacts	Copper Alloy with Gold Plating Over Nickel

STANDARD MATERIAL & FINISH OPTIONS					
Property	**RoHS**				**Not RoHS**
	Alum/Black Non Conductive	**Alum/Black Conductive**	**Alum/Electroless Nickel**	**Unplated/Marine Bronze**	**Alum/Cadmium Olive Drab**
	F6	**F7**	**F11**	**MB**	**G3**
Temperature Range	-55°C + 200°C	-55°C + 175°C	-55°C + 200°C	-55°C + 200°C	-55°C + 175°C
Salt Spray Hours	500	500	48	1000	500
Electical Conductivity	NO	Very Good	Very Good	Very Good	Very Good

C

TABLE II: MODIFICATION CODES

CONTACT OPTIONS	
Sym	**Description**
B0	Connector Without Contacts (Only for crimp version)
FINISH OPTIONS	
Sym	**Description and RoHS compliant**
F6	Black Electrodeposited Paint
F7	Black Zinc Nickel
F11	Electroless Nickel
MB	Marine Bronze
Omit for standard version (Cadmium Olive Drab Finish)	

© 2015 Glenair, Inc.

GLENAIR, INC. • 1211 AIR WAY • GLENDALE, CA 91201-2497 • 818-247-6000 • FAX 818-500-9912
www.glenair.com E-Mail: sales@glenair.com

Downloaded from Arrow.com.

Glenair IPT Series
Bayonet-Lock Signal Connectors (MIL-DTL-26482 Serie I)
Contact Dimensions

IPT Solder Cup Contacts

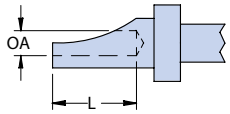

Contact size	Ø A	L	AWG Max.	Max. wire section
20	1.16	3.17	20	0.6 mmq
16	1.98	4.77	16	1.2 mmq
16 - 2.5	3.00	6.10	-	2.5 mmq

IPT...C Optional Male Crimp Contacts

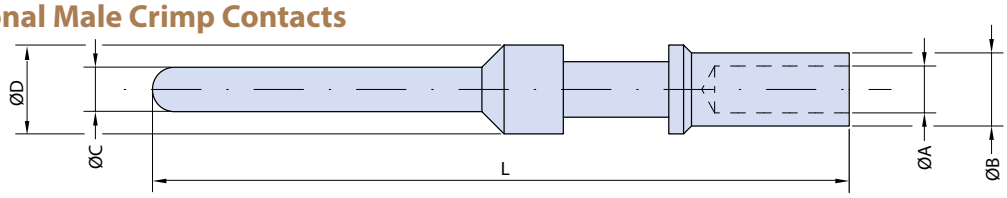

P/N	Size	mmq	AWG	A	B	C	D	L
10-374-20	20S	0.6	20	1.30 +0.03 0	1.93 +0.02 -0.02	1.00 ±0.02	2.0 +0 -0.03	20.37 ±0.1
10-375-20	20	0.6	20	1.30 +0.03 0	1.93 +0.02 -0.02	1.00 ±0.02	2.0 +0 -0.03	24.33 ±0.1
10-374-16	16S	1.2	16	1.72 +0.03 0	2.60 +0.02 -0.02	1.57 ±0.02	3.2 +0 -0.03	22.30 ±0.1
10-375-16	16	1.2	16	1.72 +0.03 0	2.60 +0.02 -0.02	1.57 ±0.02	3.2 +0 -0.03	25.80 ±0.1
10-373-12S	12S	2.3	14-12	2.50 +0.1 0	3.80 +0.2 0	2.38 ±0.02	4.0 +0 -0.03	22.50 ±0.1
10-373-12	12	2.3	14-12	2.50 +0.1 0	3.80 +0.2 0	2.38 ±0.02	4.0 +0 -0.01	26.30 ±0.1

Shell Sizes 8 through 18 use the shorter contacts, designated as 16S and 20S

IPT...C Optional Female Crimp Contacts

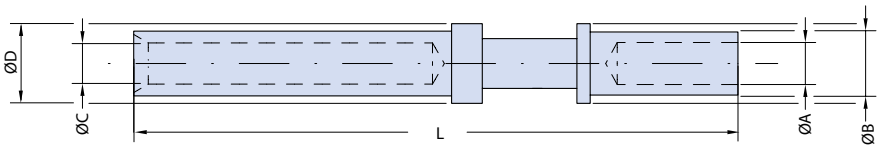

P/N	Size	mmq	AWG	A	B	C	D	L
10-571-20	20S	0.6	20	1.30 +0.03 0	1.93 +0.02 -0.02	1.08 ±0.02	1.96 +0 -0.03	20.40 ±0.1
10-573-20	20	0.6	20	1.30 +0.03 0	1.93 +0.02 -0.02	1.08 ±0.02	1.96 +0 -0.03	24.40 ±0.1
10-571-16	16S	1.2	16	1.72 +0.03 0	2.60 +0.02 -0.02	1.65 ±0.02	2.80 +0 -0.03	22.25 ±0.1
10-573-16	16	1.2	16	1.72 +0.03 0	2.60 +0.02 -0.02	1.65 ±0.02	2.80 +0 -0.03	25.80 ±0.1
10-576-12S	12S	2.3	14-12	2.50 +0.1 0	3.80 +0.2 0	2.48 ±0.05	4.0 +0 -0.01	21.45 ±0.1
10-576-12	12	2.3	14-12	2.50 +0.1 0	3.80 +0.2 0	2.48 ±0.05	4.0 +0 -0.01	25.40 ±0.1

Shell Sizes 8 through 18 use the shorter contacts, designated as 16S and 20S

© 2015 Glenair, Inc. U.S. CAGE Code 06324 Printed in Italy

Downloaded from Arrow.com.

Glenair IPT Series
Insert Arrangement Tables
and Alternate Insert Rotation

Arrangement	Cl. Isol. Rating	Dim. contact size		
		20	16	12
8 - 2	I	2		
8 - 3	I	3		
8 - 3A	I	3		
8 - 4	I	4		
8 - 33	I	3		
10 - 2	II		2	
10 - 6	I	6		
10 - 7	I	7		
10 - 8	I	8		
10 - 98	I	6		
12 - 3	II		3	
12 - 4	I		4	
12 - 8	I	8		
12 - 10	I	10		
12 - 14	I	14		
12 - A6	I		6	
14 - 4	I			4
14 - 5	II		5	
14 - 12	I	8	4	
14 - 12/3	II		12	
14 - 14 *	I	14		
14 - 15	I	14	1	
14 - 18	I	18		
14 - 19	I	19		
16 - 2**	I		2 x 16-2.5	
16 - 8	II		8	
16 - 23	I	22	1	
16 - 26	I	26		
16 - 99	I	21	2	
18 - 11	II		11	
18 - 32	I	32		
20 - 16	II		16	
20 - 39 *	I	37	2	
20 - 41	I	41		
22 - 21 *	II		21	
22 - 36	I	36		
22 - 41	I	27	14	
22 - 55	I	55		
22 - 95	I	26		6
24 - 61	I	61		

Arrangement	Degrees			
	W	X	Y	Z
8 - 2	58	122		
8 - 3	60	210		
8 - 3A	60			
8 - 4	45			
8 - 33	90			
10 - 2				
10 - 6	90			
10 - 7	90			
10 - 8				
10 - 98	90	180	240	270
12 - 3			180	
12 - 4	38			
12 - 8	90	112	203	292
12 - 10	60	155	270	295
12 - 14	60	155	270	295
12 - A6				
14 - 4	45			
14 - 5	40	92	184	273
14 - 12	43	90		
14 - 12/3				
14 - 14	17	110	155	234
14 - 15	17	110	155	234
14 - 18	15	90	180	270
14 - 19	30	165	315	
16 - 2**				
16 - 8	54	152	180	331
16 - 23	158	270		
16 - 26	60		275	338
16 - 99	66	156	223	340
18 - 11	62	119	241	340
18 - 32	85	138	222	265
20 - 16	238	318	333	347
20 - 39	63	144	252	333
20 - 41	45	126	225	
22 - 21	16	135	175	349
22 - 36	72	144	216	288
22 - 41	39	135	264	
22 - 55	30	142	226	314
22 - 95	26	180	266	
24 - 61	90	180	270	324

* Consult Factory ** Supplied only for classes without grommet

The 3 mating pins are 120° spaced. The picture shows a receptacle connector. The key orientation on plug connectors is clockwise. IAW BS9522 F0017.

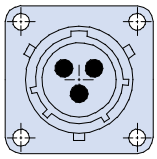

Normal Position

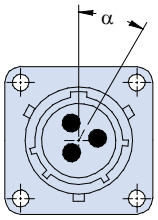

Alternate Position with Pin Contacts

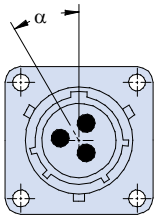

Alternate Position with Socket Contacts

© 2015 Glenair, Inc. U.S. CAGE Code 06324 Printed in Italy

Downloaded from Arrow.com.

Glenair IPT Series
Alternate Key Positions

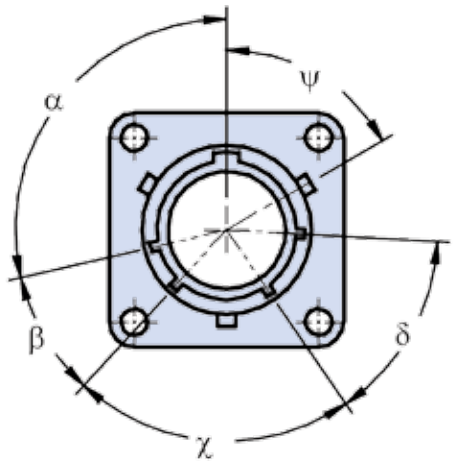

Shell Size	N Polarization				
	α	β	χ	δ	ψ
8	105	35	75	50	60
10	105	35	75	50	60
12	105	35	75	50	60
14	105	35	75	50	60
16	105	35	75	50	60
18	105	35	75	50	60
20	105	35	75	50	60
22	105	35	75	50	60
24	105	35	75	50	60

Shell Size	B Polarization				
	α	β	χ	δ	ψ
8	-	-	-	-	-
10	85	35	75	50	40
12	89	35	75	50	44
14	91	35	75	50	46
16	93	35	75	50	48
18	95	35	75	50	50
20	95	35	75	50	50
22	97	35	75	50	52
24	97	35	75	50	52

Shell Size	C Polarization				
	α	β	χ	δ	ψ
8	-	-	-	-	-
10	125	35	75	50	80
12	121	35	75	50	76
14	119	35	75	50	74
16	117	35	75	50	72
18	115	35	75	50	70
20	115	35	75	50	70
22	113	35	100	50	68
24	113	35	75	50	68

Shell Size	E Polarization				
	α	β	χ	δ	ψ
8	118	30	100	30	73
10	115	30	100	30	70
12	115	30	100	30	70
14	75	30	100	30	30
16	75	30	100	30	30
18	75	30	100	30	30
20	75	30	100	30	30
22	75	30	75	30	30
24	75	30	100	30	30

Shell Size	F Polarization				
	α	β	χ	δ	ψ
8	82	50	75	45	47
10	85	50	75	45	50
12	85	50	75	45	50
14	120	50	75	35	75
16	120	50	75	35	75
18	120	50	75	35	75
20	120	50	75	35	75
22	120	50	75	35	75
24	120	50	75	35	75

© 2015 Glenair, Inc.

GLENAIR, INC. • 1211 AIR WAY • GLENDALE, CA 91201-2497 • 818-247-6000 • FAX 818-500-9912
www.glenair.com
E-Mail: sales@glenair.com

Downloaded from Arrow.com.

Glenair IPT Series
Bayonet-Lock Signal Connectors (MIL-DTL-26482 Serie I)
Fastener Height Requirements and Panel Cutout Dimensions

For front panel mount square flange connectors (00) the "A" dimension indicates the measured maximums that mounting hardware can stand proud from the connector flange before it will interfere with connector mating. For rear box mount square flange connectors (02) the same "A" column maximum dimesions apply, but in this case the measurement taken includes the thickness of the panel wall or box (so the mounting hardware needs to be correspondingly shorter). Column "A1" defines the max dimensions for the bulkhead feedthrough (02PP) before mounting hardware interferes with mating.

Maximum Screw Protrusion

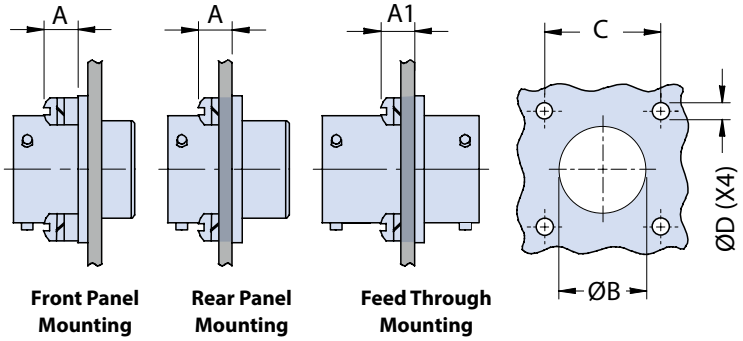

Panel thickness and panel cutout						
Shell Size	A max	A1 max	ØB +0.2 / -0		C ±0.1	ØD ±0.12
			Front Panel	Rear Panel		
8	2.2	5.54	12.7	15.0	15.10	3.04
10	2.2	5.54	16.0	18.0	18.25	3.04
12	2.2	5.54	19.0	22.5	20.60	3.04
14	2.2	5.54	22.2	25.7	23.00	3.04
16	2.2	5.54	25.5	29.0	24.60	3.04
18	2.2	5.54	28.5	32.0	27.00	3.04
20	5.4	8.74	31.7	35.2	29.35	3.04
22	5.4	8.74	35.0	38.5	31.75	3.04
24	5.4	7.9	38.0	41.6	34.90	3.73

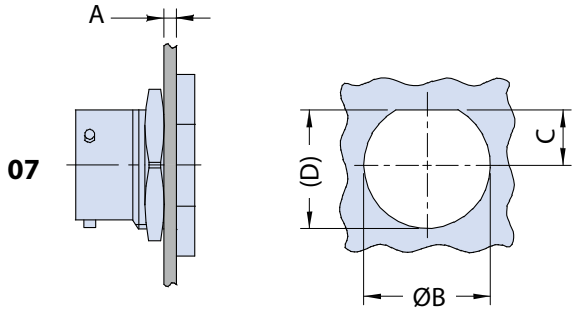

Panel thickness and panel cutout for Jam Nut connectors				
Shell Size	A min - max	ØB +0.2 / -0	C +0 / -0.25	(D)
8	1.6 - 3.2	14.5	6.35	13.6
10	1.6 - 3.2	17.7	7.95	16.8
12	1.6 - 3.2	22.7	9.55	20.9
14	1.6 - 3.2	25.7	11.25	24.1
16	1.6 - 3.2	28.8	12.80	27.2
18	1.6 - 3.2	32.0	14.40	30.4
20	1.6 - 6.3	35.1	16.10	33.6
22	1.6 - 3.2	38.4	17.6	36.8
24	1.6 - 3.2	41.5	19.25	40.0

© 2015 Glenair, Inc. U.S. CAGE Code 06324 Printed in Italy

Downloaded from Arrow.com.

Glenair IPT Series
Available Insert Arrangements

2 Contacts

Arrangement:	8-2	10-2
Contact Size:	20	16
Service Rating:	I	II

3 Contacts

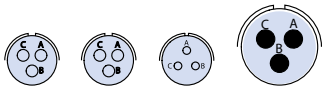

Arrangement:	8-3	8-3A	8-33	12-3
Contact Size:	20	20	20	16
Service Rating:	I	I	I	II

4 Contacts

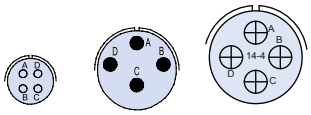

Arrangement:	8-4	12-4	14-4
Contact Size:	20	16	12
Service Rating:	I	I	I

5 Contacts

Arrangement:	14-5
Contact Size:	16
Service Rating:	II

6 Contacts

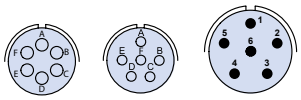

Arrangement:	10-6	10-98	12-A6
Contact Size:	20	20	16
Service Rating:	I	II	I

7 Contacts

Arrangement:	10-7
Contact Size:	20
Service Rating:	I

8 Contacts

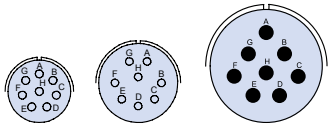

Arrangement:	10-8	12-8	16-8
Contact Size:	20	20	16
Service Rating:	I	I	II

10 Contacts

Arrangement:	12-10
Contact Size:	20
Service Rating:	I

11 Contacts

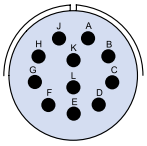

Arrangement:	18-11
Contact Size:	16
Service Rating:	II

12 Contacts

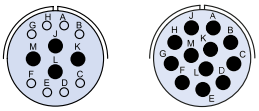

Arrangement:	14-12	14-12/3
Contact Size:	8-20, 4-16	16
Service Rating:	I	I

Contact Legend: ○ 20 ● 16 ⊕ 12

* Consult Factory

** Supplied only for classes without grommet

C

© 2015 Glenair, Inc.

U.S. CAGE Code 06324

Printed in Italy

GLENAIR, INC. • 1211 AIR WAY • GLENDALE, CA 91201-2497 • 818-247-6000 • FAX 818-500-9912
www.glenair.com
E-Mail: sales@glenair.com

Downloaded from Arrow.com.

Glenair IPT Series
Available Insert Arrangements

14 Contacts

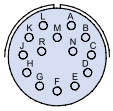

Arrangement:	12-14	14-14*
Contact Size:	20	20
Service Rating:	I	I

15 Contacts

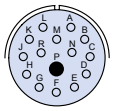

Arrangement:	14-15
Contact Size:	14-20, 1-16
Service Rating:	I

16 Contacts

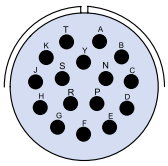

Arrangement:	20-16
Contact Size:	16
Service Rating:	II

18 Contacts

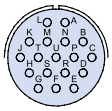

Arrangement:	14-18
Contact Size:	20
Service Rating:	I

19 Contacts

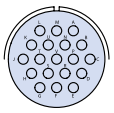

Arrangement:	14-19
Contact Size:	20
Service Rating:	I

21 Contacts

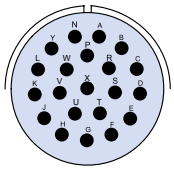

Arrangement:	22-21*
Contact Size:	16
Service Rating:	II

23 Contacts

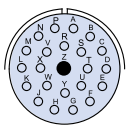
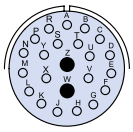

Arrangement:	16-23	16-99
Contact Size:	22-20, 1-16	21-20, 2-16
Service Rating:	I	I

26 Contacts

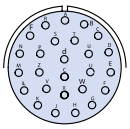

Arrangement:	16-26
Contact Size:	20
Service Rating:	I

32 Contacts

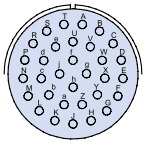
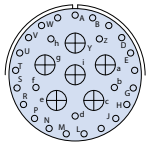

Arrangement:	18-32	22-95
Contact Size:	20	26-20, 6-12
Service Rating:	I	I

36 Contacts

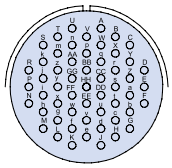

Arrangement:	22-36
Contact Size:	20
Service Rating:	I

Contact Legend ○ 20 ● 16 * Consult Factory

© 2015 Glenair, Inc.
U.S. CAGE Code 06324
Printed in Italy

Downloaded from Arrow.com.

Glenair IPT Series
Available Insert Arrangements

39 Contacts

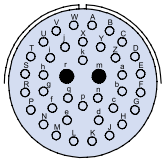

Arrangement:	20-39*
Contact Size:	37-20, 2-16
Service Rating:	I

55 Contacts

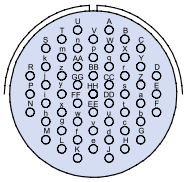

Arrangement:	22-55
Contact Size:	20
Service Rating:	I

41 Contacts

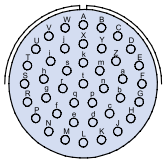

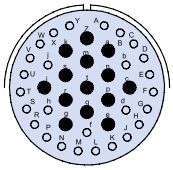

Arrangement:	20-41	22-41
Contact Size:	20	27-20, 14-16
Service Rating:	I	I

61 Contacts

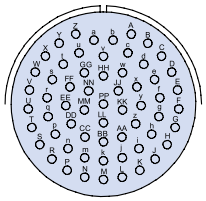

Arrangement:	24-61
Contact Size:	20
Service Rating:	I

Contact Legend ○ 20 ● 16 * Consult Factory

© 2015 Glenair, Inc. U.S. CAGE Code 06324 Printed in Italy

Downloaded from Arrow.com.

IPT 00 A
Wall Mounting Receptacle
with Backshell

Polychloroprene Insert

Connector Shell Styles
00 - Wall Mounting Receptacle

Shell Size and Insert Arrangement

Contact Type
C - Crimp
(Omit for Solder Cup)

Mod. Code Options
See Table II

IPT	00	A	18-11	P	Z	C	XX

SIPT

Silicone Insert

Environmental Class
A - Non Environmental

Contact Gender
P - Pin
S - Socket

Alternate Insert Rotation
W, X, Y, Z
(Omit for Normal)

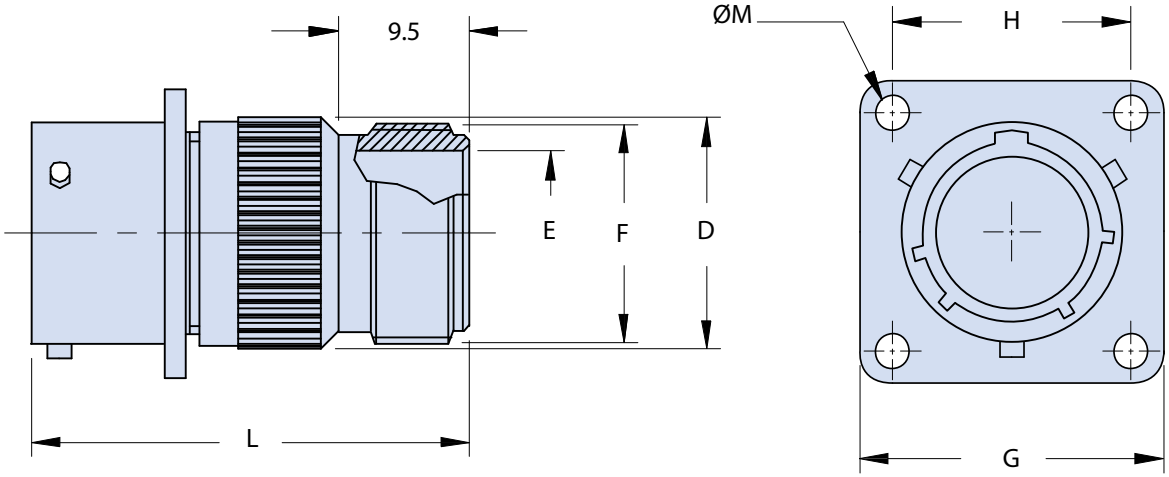

Application Notes

1. Wall mounting receptacle with backshell for the attachment of additional accessories; through mounting holes.
2. Connector Class "A" (non-environmental)––no grommet supplied.
3. Standard materials configuration consists of aluminum alloy with stainless steel coupling pins.
4. Standard contact material consists of copper alloy with gold plating over nickel.
5. A broad range of other front and rear connector accessories are available. See our website and/or contact factory for complete information.
6. Standard insert is high insulation synthetic rubber.

© 2015 Glenair, Inc. U.S. CAGE Code 06324 Printed in Italy

Downloaded from Arrow.com.

IPT 00 A
Wall Mounting Receptacle
with Backshell

TABLE I: DIMENSIONS

Shell size	D Max.	E min.	F Thread in inches	G ±0.4	H ±0.1	ØM +0.1 0	L Max.
8	15.00	7.55	.5000 - 28 UNEF	20.6	15.10	3.04	45.9
10	18.20	10.70	.6250 - 24 UNEF	23.8	18.25	3.04	45.9
12	21.20	13.85	.7500 - 20 UNEF	26.2	20.60	3.04	45.9
14	24.60	16.85	.8750 - 20 UNEF	28.6	23.00	3.04	45.9
16	27.60	20.00	1.0000 - 20 UNEF	31.0	24.60	3.04	45.9
18	30.90	22.30	1.1875 - 18 UNEF	33.3	27.00	3.04	45.9
20	33.80	25.75	1.1875 - 18 UNEF	36.5	29.40	3.04	50.0
22	37.10	28.80	1.4375 - 18 UNEF	39.7	31.75	3.04	50.0
24	40.25	32.00	1.4375 - 18 UNEF	42.8	34.92	3.73	50.0

TABLE II: MODIFICATION CODES

CONTACT OPTIONS	
Sym	**Description**
B0	Connector Without Contacts (Only for crimp version)
FINISH OPTIONS	
Sym	**Description and RoHS compliant**
F6	Black Electrodeposited Paint
F7	Black Zinc Nickel
F11	Electroless Nickel
MB	Marine Bronze
Omit for standard version (Cadmium Olive Drab Finish)	

© 2015 Glenair, Inc.

GLENAIR, INC. • 1211 AIR WAY • GLENDALE, CA 91201-2497 • 818-247-6000 • FAX 818-500-9912
www.glenair.com
E-Mail: sales@glenair.com

Downloaded from Arrow.com.

IPT 00 A...N0
Wall Mounting Receptacle
without Backshell

Polychloroprene Insert	Environmental Class	Shell Size and Insert Arrangement	Alternate Insert Rotation	No Backshell of Any Kind Supplied
	A...N0 - Non Environmental		W, X, Y, Z (Omit for Normal)	

IPT **00** **A** **18-11** **P** **Z** **C** **N0** **XX**

SIPT

Silicone Insert

Connector Shell Styles
00 - Wall Mounting Receptacle

Contact Gender
P - Pin
S - Socket

Contact Type
C - Crimp
(Omit for Solder Cup)

Mod. Code Options
See Table II

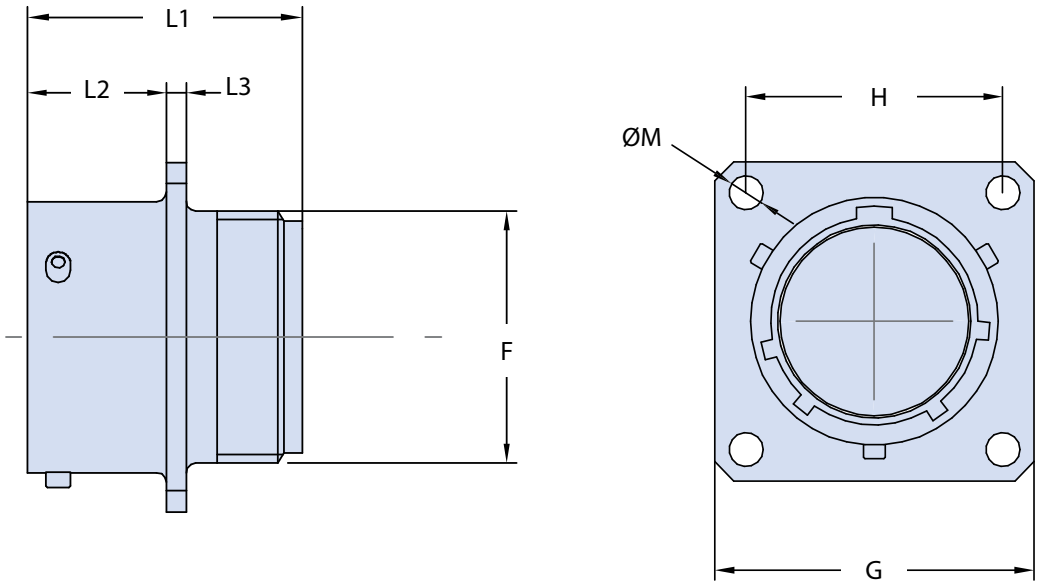

Application Notes

1. Wall mounting receptacle without backshell with rear thread for the attachment of additional accessories; through mounting holes.
2. Connector Class "A..N0" (non-environmental)––no grommet supplied.
3. Standard materials configuration consists of aluminum alloy with stainless steel coupling pins.
4. Standard contact material consists of copper alloy with gold plating over nickel.
5. A broad range of other front and rear connector accessories are available. See our website and/or contact factory for complete information.
6. Standard insert is high insulation synthetic rubber.

© 2015 Glenair, Inc. U.S. CAGE Code 06324 Printed in Italy

Downloaded from Arrow.com.

IPT 00 A...N0
Wall Mounting Receptacle
without Backshell

TABLE I: DIMENSIONS

Shell size	F Thread in inches	G ±0.4	H ±0.1	ØM +0.1 0	L1 Max.	L2 +0.8 -0	L3 Max.
8	.4375 - 28 UNEF	20.6	15.10	3.04	21.7	10.94	2.0
10	.5625 - 24 UNEF	23.8	18.25	3.04	21.4	10.94	2.0
12	.6875 - 20 UNEF	26.2	20.60	3.04	21.7	10.94	2.0
14	.8125 - 20 UNEF	28.6	23.00	3.04	21.7	10.94	2.0
16	.8375 - 20 UNEF	31.0	24.60	3.04	21.4	10.94	2.0
18	1.0625 - 18 UNEF	33.3	27.00	3.04	21.4	10.94	2.0
20	1.1875 - 18 UNEF	36.5	29.40	3.04	27.0	14.12	2.8
22	1.3125 - 18 UNEF	39.7	31.75	3.04	27.0	14.12	2.8
24	1.4375 - 18 UNEF	42.8	34.92	3.73	29.0	14.96	2.8

TABLE II: MODIFICATION CODES

CONTACT OPTIONS	
Sym	**Description**
B0	Connector Without Contacts (Only for crimp version)
FINISH OPTIONS	
Sym	**Description and RoHS compliant**
F6	Black Electrodeposited Paint
F7	Black Zinc Nickel
F11	Electroless Nickel
MB	Marine Bronze
Omit for standard version (Cadmium Olive Drab Finish)	

© 2015 Glenair, Inc.

GLENAIR, INC. • 1211 AIR WAY • GLENDALE, CA 91201-2497 • 818-247-6000 • FAX 818-500-9912
www.glenair.com
E-Mail: sales@glenair.com

Downloaded from Arrow.com.

IPT 00 A...PG_ _
Wall Mounting Receptacle
with PG Threaded Backshell

Polychloroprene Insert	Environmental Class	Shell Size and Insert Arrangement	Alternate Insert Rotation	PG Thread Size
	A...PG - Non Environmental		W, X, Y, Z (Omit for Normal)	See Table I

IPT 00 A 18-11 P Z C PG16 XX

SIPT

Silicone Insert

Connector Shell Styles
00 - Wall Mounting Receptacle

Contact Gender
P - Pin
S - Socket

Contact Type
C - Crimp
(Omit for Solder Cup)

Mod. Code Options
See Table II

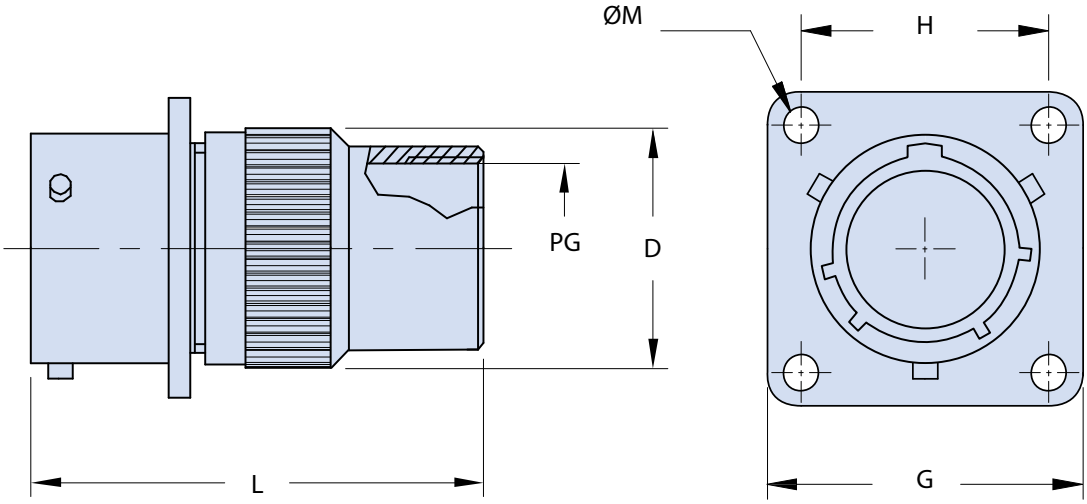

Application Notes

1. Wall mounting receptacle with PG threaded backshell. Other PG sizes and types available on request ; through mounting holes.
2. Connector Class "A" (non-environmental)––no grommet supplied.
3. Standard materials configuration consists of aluminum alloy with stainless steel coupling pins.
4. Standard contact material consists of copper alloy with gold plating over nickel.
5. A broad range of other front and rear connector accessories are available. See our website and/or contact factory for complete information.
6. Standard insert is high insulation synthetic rubber.

© 2015 Glenair, Inc. U.S. CAGE Code 06324 Printed in Italy

Downloaded from Arrow.com.

TABLE I: DIMENSIONS

Shell size	D Max	L Max	PG Thread	G ±0.4	H ±0.1	ØM +0.1 0
8	18.0	41.0	7 / 9	20.6	15.10	3.04
10	18.0	41.0	9	23.8	18.25	3.04
12	23.5	51.0	11	26.2	20.60	3.04
14	24.5	51.0	11 / 13.5 / 16	28.6	23.00	3.04
16	28.0	56.0	11 / 13.5 / 16	31.0	24.60	3.04
18	30.5	56.0	13.5 / 16	33.3	27.00	3.04
20	33.5	58.5	13.5 / 16	36.5	29.40	3.04
22	37.0	63.5	13.5 / 16 / 21	39.7	31.75	3.04
24	40.0	66.0	13.5 / 16 / 21	42.8	34.92	3.73

TABLE II: MODIFICATION CODES

CONTACT OPTIONS	
Sym	**Description**
B0	Connector Without Contacts (Only for crimp version)
FINISH OPTIONS	
Sym	**Description and RoHS compliant**
F6	Black Electrodeposited Paint
F7	Black Zinc Nickel
F11	Electroless Nickel
MB	Marine Bronze
Omit for standard version (Cadmium Olive Drab Finish)	

© 2015 Glenair, Inc.

GLENAIR, INC. • 1211 AIR WAY • GLENDALE, CA 91201-2497 • 818-247-6000 • FAX 818-500-9912
www.glenair.com
E-Mail: sales@glenair.com

Downloaded from Arrow.com.

IPT 00 A...PH_ _
Wall Mounting Receptacle
with Backshell and PG Cable Gland

IPT	00	A	18-11	P	Z	C	PH16	XX

- **IPT** — **Polychloroprene Insert**
- **SIPT** — **Silicone Insert**
- **00** — **Connector Shell Styles** *00* - Wall Mounting Receptacle
- **A** — **Environmental Class** *A...PH* - Non Environmental
- **18-11** — **Shell Size and Insert Arrangement**
- **P** — **Contact Gender** *P* - Pin; *S* - Socket
- **Z** — **Contact Type** *C* - Crimp (Omit for Solder Cup)
- **C** — **Alternate Insert Rotation** W, X, Y, Z (Omit for Normal)
- **PH16** — **PG Cable Gland Size** See Table I
- **XX** — **Mod. Code Options** See Table II

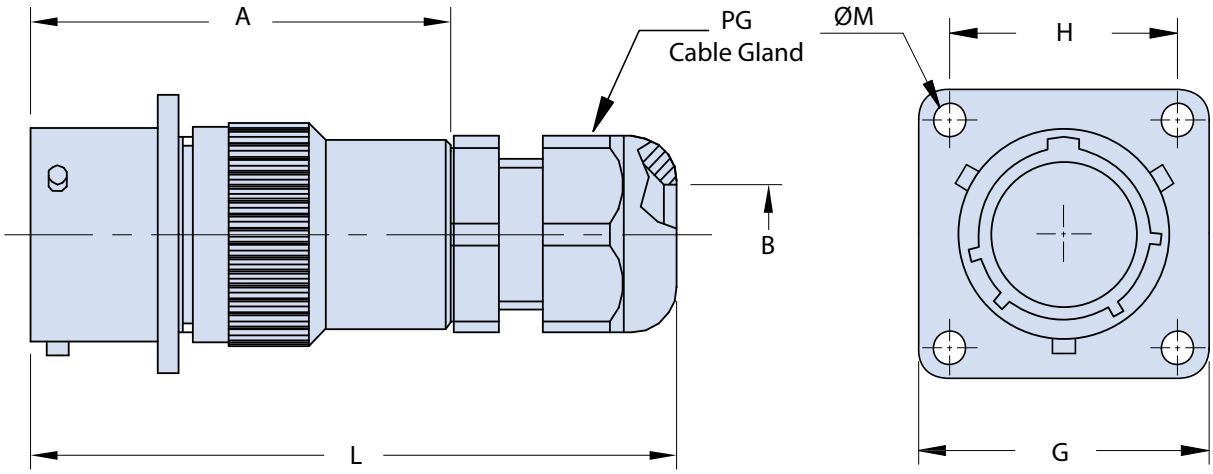

Application Notes

1. Wall mounting receptacle with backshell and plastic PG cable gland. Other PG sizes and types available upon request; through mounting holes.
2. Connector Class "A" (non-environmental)––no grommet supplied.
3. Standard materials configuration consists of aluminum alloy with stainless steel coupling pins.
4. Standard contact material consists of copper alloy with gold plating over nickel.
5. A broad range of other front and rear connector accessories are available. See our website and/or contact factory for complete information.
6. Standard insert is high insulation synthetic rubber.

© 2015 Glenair, Inc. U.S. CAGE Code 06324 Printed in Italy

Downloaded from Arrow.com.

IPT 00 A...PH_ _
Wall Mounting Receptacle
with Backshell and PG Cable Gland

Glenair®

TABLE I: DIMENSIONS

Shell size	A Max	B min. - max.	PG Cable Gland Size	L Max.	G ±0.4	H ±0.1	ØM +0.1 0
8	41.0	3 - 6.5 / 4 - 8	7 / 9	65.00	20.6	15.10	3.04
10	41.0	4 - 8	9	65.00	23.8	18.25	3.04
12	51.0	5 - 10	11	77.50	26.2	20.60	3.04
14	51.0	5 - 10 / 6 - 12 / 9 - 14	11 / 13.5 / 16	81.00	28.6	23.00	3.04
16	56.0	5 - 10 / 6 - 12 / 9 - 14	11 / 13.5 / 16	86.00	31.0	24.60	3.04
18	56.0	6 - 12 / 9 - 14	13.5 / 16	86.00	33.3	27.00	3.04
20	58.5	6 - 12 / 9 - 14	13.5 / 16	88.50	36.5	29.40	3.04
22	63.5	6 - 12 / 9 - 14 / 13 - 18	13.5 / 16 / 21	99.50	39.7	31.75	3.04
24	66.0	6 - 12 / 9 - 14 / 13 - 18	13 5 / 16 / 21	102.00	42.8	34.92	3.73

TABLE II: MODIFICATION CODES

CONTACT OPTIONS	
Sym	**Description**
B0	Connector Without Contacts (Only for crimp version)
FINISH OPTIONS	
Sym	**Description and RoHS compliant**
F6	Black Electrodeposited Paint
F7	Black Zinc Nickel
F11	Electroless Nickel
MB	Marine Bronze
Omit for standard version (Cadmium Olive Drab Finish)	

© 2015 Glenair, Inc.

GLENAIR, INC. • 1211 AIR WAY • GLENDALE, CA 91201-2497 • 818-247-6000 • FAX 818-500-9912
www.glenair.com
E-Mail: sales@glenair.com

Downloaded from Arrow.com.

IPT 00 A...PHM_ _
Wall Mounting Receptacle
with PHM Backshell
and Sleeves to Accommodate Various Cable Sizes

Polychloroprene Insert	Environmental Class	Shell Size and Insert Arrangement	Alternate Insert Rotation	PHM11 Thread Size
	A...PHM - Non Environmental		W, X, Y, Z (Omit for Normal)	See Table I

IPT	00	A	18-11	P	Z	C	PHM11	XX

SIPT	Connector Shell Styles	Contact Gender	Contact Type	Mod. Code Options
Silicone Insert	***00*** - Wall Mounting Receptacle	***P*** - Pin ***S*** - Socket	***C*** - Crimp (Omit for Solder Cup)	See Table II

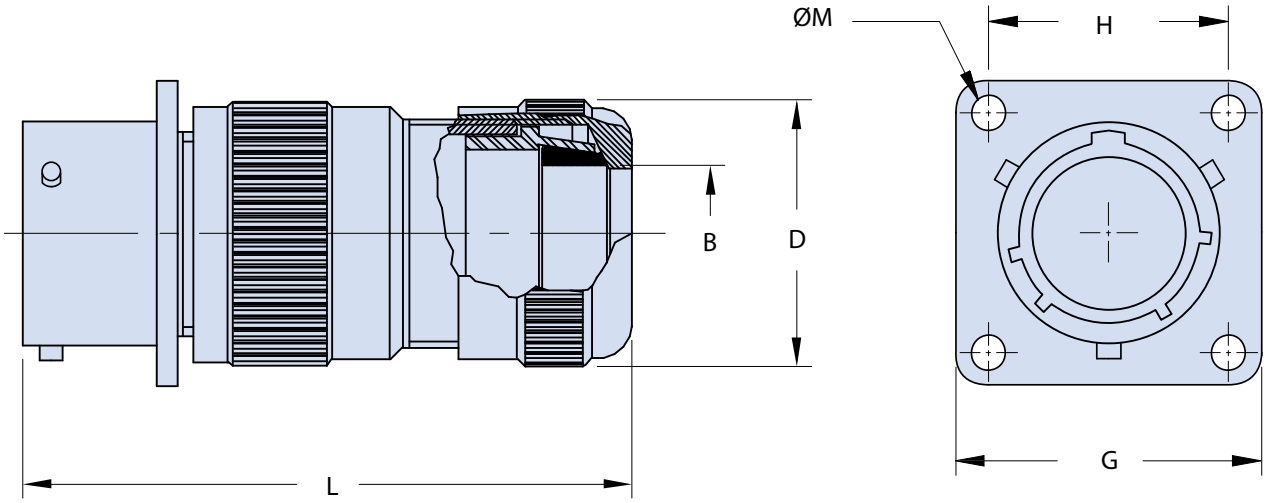

Application Notes

1. Wall mounting receptacle with backshell and PHM cable clamp. Rubber sleeves included to allow use of different cable diameters. Through mounting holes.
2. Connector Class "A" (non-environmental)––no grommet supplied.
3. Standard materials configuration consists of aluminum alloy with stainless steel coupling pins.
4. Standard contact material consists of copper alloy with gold plating over nickel.
5. A broad range of other front and rear connector accessories are available. See our website and/or contact factory for complete information.
6. Standard insert is high insulation synthetic rubber.

© 2015 Glenair, Inc. U.S. CAGE Code 06324 Printed in Italy

Downloaded from Arrow.com.

IPT 00 A...PHM_ _
Wall Mounting Receptacle
with PHM Backshell
and Sleeves to Accommodate Various Cable Sizes

TABLE I: DIMENSIONS

Shell size	P.N. PHM	B min. - max.	D Max.	G ±0.4	H ±0.1	ØM +0.1 0	L Max.
8	7	2 - 7	15.0	20.6	15.10	3.04	55.0
10	9	2 - 9	21.0	23.8	18.25	3.04	55.0
12	11	2 - 11	24.0	26.2	20.60	3.04	65.0
14	11	2 - 11	24.0	28.6	23.00	3.04	65.0
16	11	2 - 11	24.0	31.0	24.60	3.04	65.0
18	11 / 18	2 - 11 / 9 - 16.5	42.0	33.3	27.00	3.04	80.0
20	18	9 - 16.5	42.0	36.5	29.40	3.04	81.5
22	18	9 - 16.5	42.0	39.7	31.75	3.04	81.5
24	18 / 22 / 24	9 - 16.5 / 15 - 20 / 19 - 24	42.0	42.8	34.92	3.73	82.0

TABLE II: MODIFICATION CODES

CONTACT OPTIONS	
Sym	**Description**
B0	Connector Without Contacts (Only for crimp version)
FINISH OPTIONS	
Sym	**Description and RoHS compliant**
F6	Black Electrodeposited Paint
F7	Black Zinc Nickel
F11	Electroless Nickel
MB	Marine Bronze
Omit for standard version (Cadmium Olive Drab Finish)	

© 2015 Glenair, Inc.

GLENAIR, INC. • 1211 AIR WAY • GLENDALE, CA 91201-2497 • 818-247-6000 • FAX 818-500-9912
www.glenair.com
E-Mail: sales@glenair.com

Downloaded from Arrow.com.

IPT 00 A...SR
Wall Mounting Receptacle
with Backshell, Bushing and Cable Clamp

IPT	00	A	18-11	P	Z	C	SR	XX

- **IPT** — Polychloroprene Insert
- **SIPT** — Silicone Insert
- **00** — Connector Shell Styles: *00* - Wall Mounting Receptacle
- **A** — Environmental Class: *A...SR* - Non Environmental
- **18-11** — Shell Size and Insert Arrangement
- **P** — Contact Gender: *P* - Pin; *S* - Socket
- **Z** — Alternate Insert Rotation: W, X, Y, Z (Omit for Normal)
- **C** — Contact Type: *C* - Crimp (Omit for Solder Cup)
- **SR** — Cable Clamp with Bushing
- **XX** — Mod. Code Options: See Table II

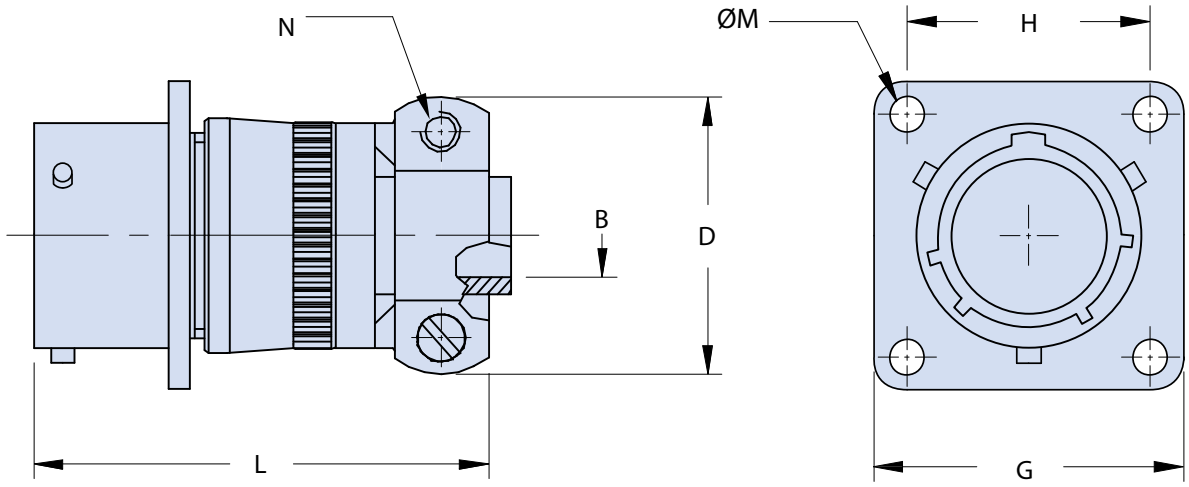

Application Notes

1. Wall mounting receptacle with backshell, bushing and cable clamp; through mounting holes.
2. Connector Class "A" (non-environmental)––no grommet supplied.
3. Standard materials configuration consists of aluminum alloy with stainless steel coupling pins.
4. Standard contact material consists of copper alloy with gold plating over nickel.
5. A broad range of other front and rear connector accessories are available. See our website and/or contact factory for complete information.
6. Standard insert is high insulation synthetic rubber.

© 2015 Glenair, Inc. U.S. CAGE Code 06324 Printed in Italy

Downloaded from Arrow.com.

TABLE I: DIMENSIONS

Shell size	B ±0.25	D ±0.2	G ±0.4	H ±0.1	ØM +0.1 0	L Max.	N Thread
8	3.2	19.10	20.6	15.10	3.04	48.5	6 - 32
10	4.8	20.70	23.8	18.25	3.04	48.5	6 - 32
12	7.9	23.90	26.2	20.60	3.04	48.5	6 - 32
14	9.5	27.00	28.6	23.00	3.04	48.5	6 - 32
16	12.7	28.60	31.0	24.60	3.04	52.0	6 - 32
18	15.9	35.00	33.3	27.00	3.04	52.0	8 - 32
20	15.9	35.00	36.5	29.40	3.04	60.5	8 - 32
22	19.0	39.75	39.7	31.75	3.04	60.5	8 - 32
24	20.3	42.10	42.8	34.92	3.73	63.0	8 - 32

TABLE II: MODIFICATION CODES

CONTACT OPTIONS	
Sym	**Description**
B0	Connector Without Contacts (Only for crimp version)
FINISH OPTIONS	
Sym	**Description and RoHS compliant**
F6	Black Electrodeposited Paint
F7	Black Zinc Nickel
F11	Electroless Nickel
MB	Marine Bronze
Omit for standard version (Cadmium Olive Drab Finish)	

© 2015 Glenair, Inc.

Downloaded from Arrow.com.

IPT 00 E
Wall Mounting Receptacle
with General Duty Backshell

Polychloroprene Insert	Environmental Class	Shell Size and Insert Arrangement	Alternate Insert Rotation	Mod. Code Options
	E - Environmental		W, X, Y, Z (Omit for Normal)	See Table II

IPT 00 E 18-11 P Z C XX

SIPT

Silicone Insert

Connector Shell Styles
00 - Wall Mounting Receptacle

Contact Gender
P - Pin
S - Socket

Contact Type
C - Crimp
(Omit for Solder Cup)

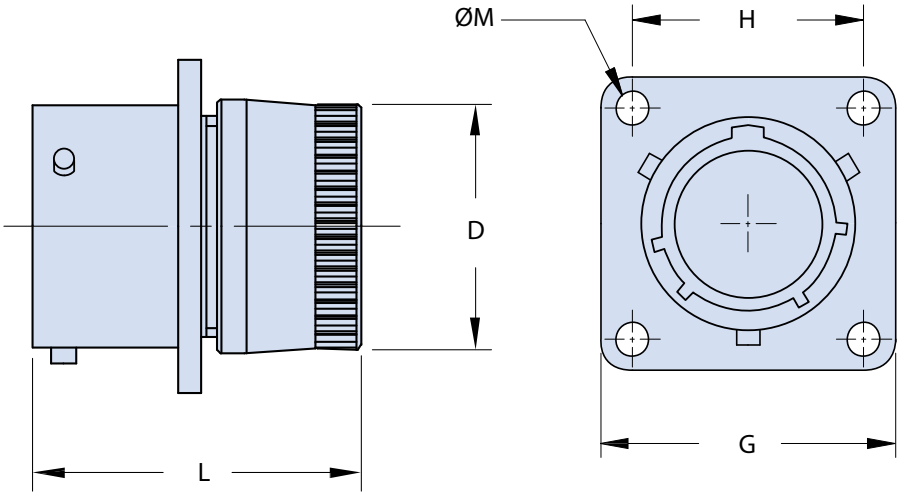

Application Notes

1. Wall mounting receptacle includes sealing grommet and backshell for use with individual wires. Through mounting holes.
2. Connector Class "E" (environmental)––Wire sealing grommet supplied.
3. Standard materials configuration consists of aluminum alloy with stainless steel coupling pins.
4. Standard contact material consists of copper alloy with gold plating over nickel.
5. A broad range of other front and rear connector accessories are available. See our website and/or contact factory for complete information.
6. Standard insert is high insulation synthetic rubber.

© 2015 Glenair, Inc. U.S. CAGE Code 06324 Printed in Italy

Downloaded from Arrow.com.

IPT 00 E
Wall Mounting Receptacle
with General Duty Backshell

TABLE I: DIMENSIONS

Shell size	D Max.	G ±0.4	H ±0.1	ØM +0.1 0	L Max.
8	14.20	20.6	15.10	3.04	32.15
10	17.40	23.8	18.25	3.04	32.15
12	20.65	26.2	20.60	3.04	32.15
14	23.60	28.6	23.00	3.04	32.15
16	26.85	31.0	24.60	3.04	32.15
18	29.85	33.3	27.00	3.04	32.15
20	33.00	36.5	29.40	3.04	38.50
22	36.30	39.7	31.75	3.04	38.50
24	39.50	42.8	34.92	3.73	40.10

TABLE II: MODIFICATION CODES

CONTACT OPTIONS	
Sym	**Description**
B0	Connector Without Contacts (Only for crimp version)
FINISH OPTIONS	
Sym	**Description and RoHS compliant**
F6	Black Electrodeposited Paint
F7	Black Zinc Nickel
F11	Electroless Nickel
MB	Marine Bronze
Omit for standard version (Cadmium Olive Drab Finish)	

© 2015 Glenair, Inc.

GLENAIR, INC. • 1211 AIR WAY • GLENDALE, CA 91201-2497 • 818-247-6000 • FAX 818-500-9912
www.glenair.com
E-Mail: sales@glenair.com

Downloaded from Arrow.com.

IPT 00 E...SR
Wall Mounting Receptacle
with Backshell, Cable Clamp and Bushing

Polychloroprene Insert	Environmental Class	Shell Size and Insert Arrangement	Alternate Insert Rotation		Cable Clamp with Bushing	
	E...SR - Environmental		W, X, Y, Z (Omit for Normal)			
IPT	**00**	**E**	**18-11**	**P**	**Z**	**C**	**SR**	**XX**
SIPT	**Connector Shell Styles** ***00*** - Wall Mounting Receptacle			**Contact Gender** ***P*** - Pin ***S*** - Socket		**Contact Type** ***C*** - Crimp (Omit for Solder Cup)		**Mod. Code Options** See Table II
Silicone Insert								

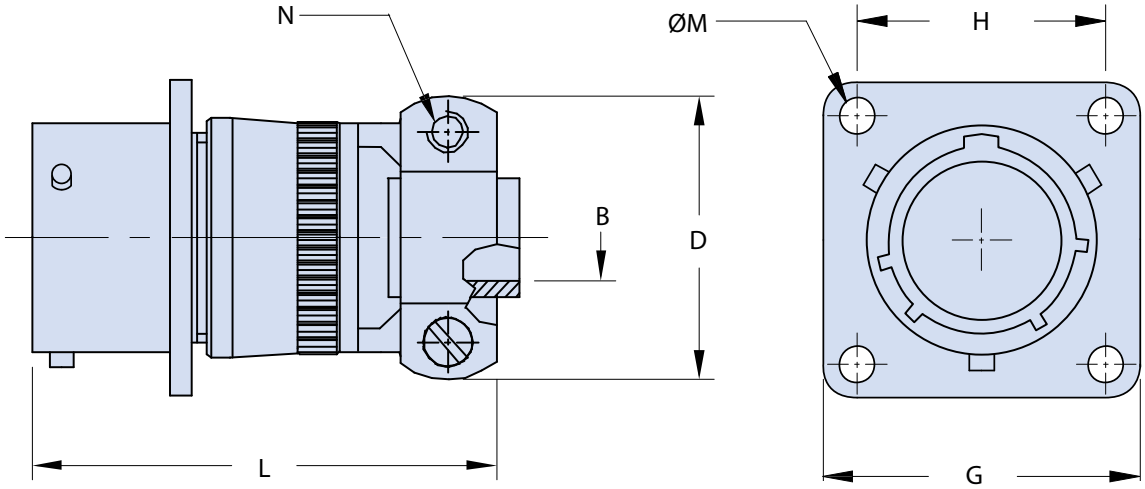

Application Notes

1. Wall mounting receptacle with cable clamp and bushing for cable protection; through mounting holes.
2. Connector Class "E" (environmental)––Wire sealing grommet supplied.
3. Standard materials configuration consists of aluminum alloy with stainless steel coupling pins.
4. Standard contact material consists of copper alloy with gold plating over nickel.
5. A broad range of other front and rear connector accessories are available. See our website and/or contact factory for complete information.
6. Standard insert is high insulation synthetic rubber.

© 2015 Glenair, Inc. U.S. CAGE Code 06324 Printed in Italy

Downloaded from Arrow.com.

TABLE I: DIMENSIONS

Shell size	B ±0.25	D ±0.2	G ±0.4	H ±0.1	ØM +0.1 0	L Max.	N Thread
8	3.2	19.10	20.6	15.10	3.04	48.5	6 - 32
10	4.8	20.70	23.8	18.25	3.04	48.5	6 - 32
12	7.9	23.90	26.2	20.60	3.04	48.5	6 - 32
14	9.5	27.00	28.6	23.00	3.04	48.5	6 - 32
16	12.7	28.60	31.0	24.60	3.04	52.0	6 - 32
18	15.9	35.00	33.3	27.00	3.04	52.0	8 - 32
20	15.9	35.00	36.5	29.40	3.04	60.5	8 - 32
22	19.0	39.75	39.7	31.75	3.04	60.5	8 - 32
24	20.3	42.10	42.8	34.92	3.73	63.0	8 - 32

TABLE II: MODIFICATION CODES

CONTACT OPTIONS	
Sym	**Description**
B0	Connector Without Contacts (Only for crimp version)
FINISH OPTIONS	
Sym	**Description and RoHS compliant**
F6	Black Electrodeposited Paint
F7	Black Zinc Nickel
F11	Electroless Nickel
MB	Marine Bronze
Omit for standard version (Cadmium Olive Drab Finish)	

© 2015 Glenair, Inc.

GLENAIR, INC. • 1211 AIR WAY • GLENDALE, CA 91201-2497 • 818-247-6000 • FAX 818-500-9912
www.glenair.com
E-Mail: sales@glenair.com

Downloaded from Arrow.com.

IPT 00 G
Wall Mounting Receptacle
with Shrink Boot Backshell

Polychloroprene Insert	Environmental Class		Shell Size and Insert Arrangement		Alternate Insert Rotation		Mod. Code Options
	G - Environmental				W, X, Y, Z (Omit for Normal)		See Table II
IPT	**00**	**G**	**18-11**	**P**	**Z**	**C**	**XX**
SIPT	Connector Shell Styles *00* - Wall Mounting Receptacle			Contact Gender *P* - Pin *S* - Socket		Contact Type *C* - Crimp (Omit for Solder Cup)	
Silicone Insert							

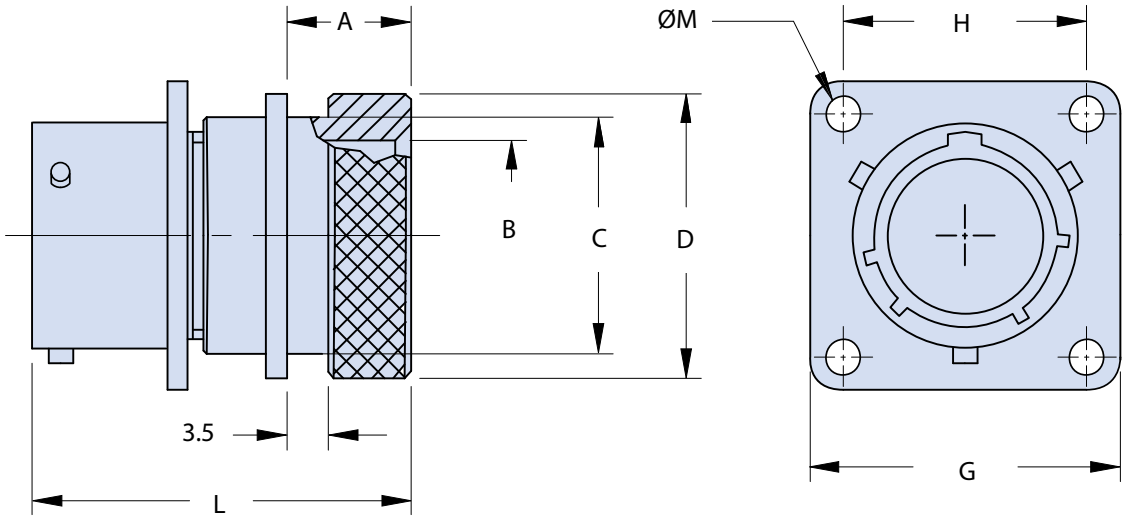

Application Notes

1. Wall mounting receptacle with backshell for heat shrink boot; through mounting holes.
2. Connector Class "G" (environmental)––Wire sealing grommet supplied.
3. Standard materials configuration consists of aluminum alloy with stainless steel coupling pins.
4. Standard contact material consists of copper alloy with gold plating over nickel.
5. A broad range of other front and rear connector accessories are available. See our website and/or contact factory for complete information.
6. Standard insert is high insulation synthetic rubber.

© 2015 Glenair, Inc. U.S. CAGE Code 06324 Printed in Italy

Downloaded from Arrow.com.

IPT 00 G
Wall Mounting Receptacle
with Shrink Boot Backshell

TABLE I: DIMENSIONS

Shell size	A ±0.1	B +0.1 -0	C +0 -0.1	D +0 -0.3	G ±0.4	H ±0.1	ØM +0.1 0	L Max.
8	12.2	8.20	13.0	15.5	20.6	15.10	3.04	43.5
10	12.2	11.40	15.8	18.3	23.8	18.25	3.04	42.0
12	12.2	14.55	21.0	23.6	26.2	20.60	3.04	42.0
14	12.2	17.50	21.8	24.4	28.6	23.00	3.04	42.0
16	14.5	20.60	25.9	29.7	31.0	24.60	3.04	44.0
18	14.5	23.15	28.2	31.9	33.3	27.00	3.04	44.5
20	15.8	26.50	32.2	36.0	36.5	29.40	3.04	48.5
22	15.8	29.60	34.5	38.4	39.7	31.75	3.04	48.5
24	14.9	32.80	37.6	41.5	42.8	34.92	3.73	48.5

TABLE II: MODIFICATION CODES

CONTACT OPTIONS	
Sym	**Description**
B0	Connector Without Contacts (Only for crimp version)
FINISH OPTIONS	
Sym	**Description and RoHS compliant**
F6	Black Electrodeposited Paint
F7	Black Zinc Nickel
F11	Electroless Nickel
MB	Marine Bronze
Omit for standard version (Cadmium Olive Drab Finish)	

© 2015 Glenair, Inc.

GLENAIR, INC. • 1211 AIR WAY • GLENDALE, CA 91201-2497 • 818-247-6000 • FAX 818-500-9912
www.glenair.com
E-Mail: sales@glenair.com

Downloaded from Arrow.com.

IPT 00 J
Wall Mounting Receptacle
with Long Backshell and Cable Clamp

Polychloroprene Insert	Environmental Class		Shell Size and Insert Arrangement	Alternate Insert Rotation		Mod. Code Options
	J- Environmental with Long Backshell and Cable Clamp			W, X, Y, Z (Omit for Normal)		See Table II
IPT	00	J	18-11	P	Z	C	XX
SIPT	Connector Shell Styles *00* - Wall Mounting Receptacle			Contact Gender *P* - Pin *S* - Socket		Contact Type *C* - Crimp (Omit for Solder Cup)	
Silicone Insert							

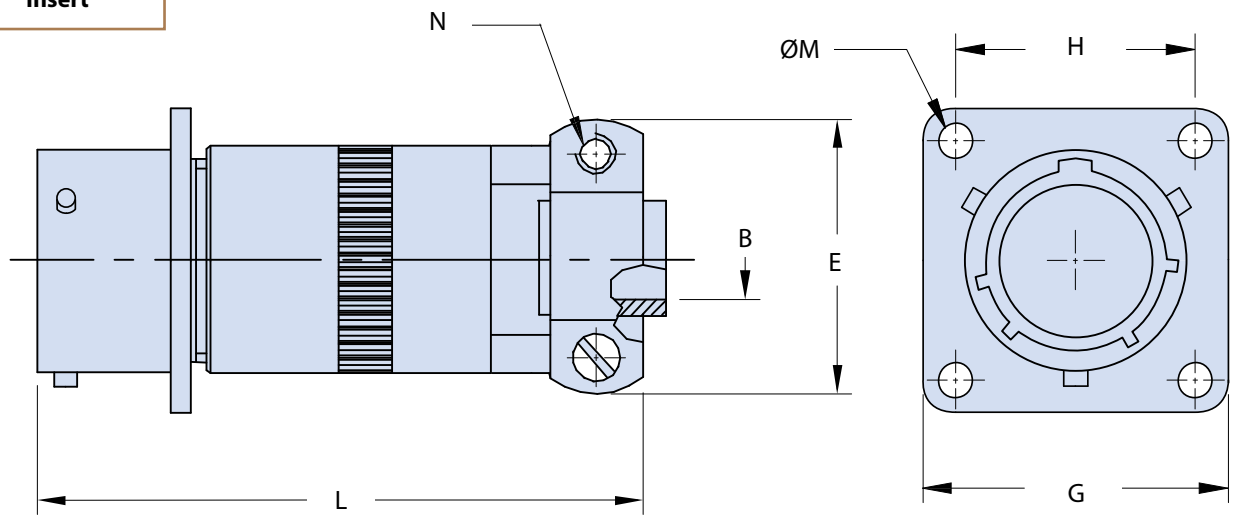

C

Application Notes

1. Wall mounting receptacle with backshell incorporated metal sleeve and cable clamp; through mounting holes.
2. Connector/Backshell Class "J" (environmental)––No grommet supplied.
3. Standard materials configuration consists of aluminum alloy with stainless steel coupling pins.
4. Standard contact material consists of copper alloy with gold plating over nickel.
5. A broad range of other front and rear connector accessories are available. See our website and/or contact factory for complete information.
6. Standard insert is high insulation synthetic rubber.

© 2015 Glenair, Inc. U.S. CAGE Code 06324 Printed in Italy

Downloaded from Arrow.com.

IPT 00 J
Wall Mounting Receptacle
with Long Backshell and Cable Clamp

TABLE I: DIMENSIONS

Shell size	B ±0.25	E ±0.2	G ±0.4	H ±0.1	ØM +0.1 0	L Max.	N Thread
8	3.2	19.10	20.6	15.10	3.04	56	6 - 32
10	4.8	20.70	23.8	18.25	3.04	56	6 - 32
12	7.9	23.90	26.2	20.60	3.04	59	6 - 32
14	9.5	27.00	28.6	23.00	3.04	66	6 - 32
16	12.7	28.60	31.0	24.60	3.04	72	6 - 32
18	15.9	35.00	33.3	27.00	3.04	79	8 - 32
20	15.9	35.00	36.5	29.40	3.04	90	8 - 32
22	19.0	39.75	39.7	31.75	3.04	95	8 - 32
24	20.3	42.10	42.8	34.92	3.73	102	8 - 32

TABLE II: MODIFICATION CODES

CONTACT OPTIONS	
Sym	**Description**
B0	Connector Without Contacts (Only for crimp version)
FINISH OPTIONS	
Sym	**Description and RoHS compliant**
F6	Black Electrodeposited Paint
F7	Black Zinc Nickel
F11	Electroless Nickel
MB	Marine Bronze
Omit for standard version (Cadmium Olive Drab Finish)	

© 2015 Glenair, Inc.

GLENAIR, INC. • 1211 AIR WAY • GLENDALE, CA 91201-2497 • 818-247-6000 • FAX 818-500-9912
www.glenair.com
E-Mail: sales@glenair.com

Downloaded from Arrow.com.

IPT 00 M
Wall Mounting Receptacle
with Backshell
for EMI Shield Termination and Shrink Boot

Polychloroprene Insert	Connector Shell Styles	Shell Size and Insert Arrangement	Alternate Insert Rotation	Mod. Code Options
	00 - Wall Mounting Receptacle		W, X, Y, Z (Omit for Normal)	See Table II
IPT	**00**	**18-11**	**Z**	**XX**
SIPT				
Silicone Insert				

Environmental Class	Contact Gender	Contact Type
M - Environmental with Backshell for EMI Shield Termination and Cable Shrink Boot	***P*** - Pin ***S*** - Socket	***C*** - Crimp (Omit for Solder Cup)
M	**P**	**C**

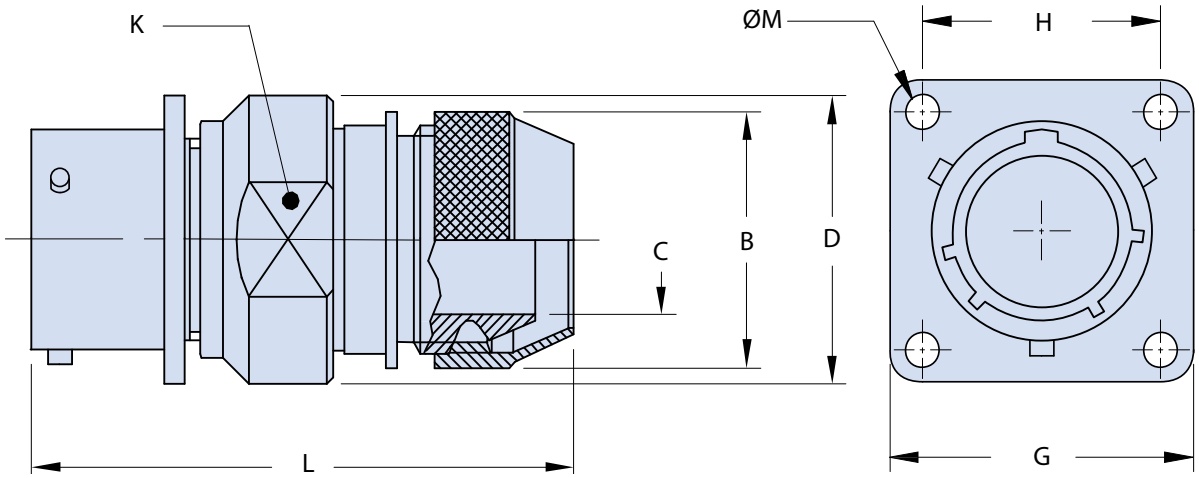

Application Notes

1. Wall mounting receptacle with backshell for terminating shielded cable, suitable for heat shrink boots; through mounting holes.
2. Connector/Backshell Class "M" (environmental)––Wire sealing grommet supplied.
3. Standard materials configuration consists of aluminum alloy with stainless steel coupling pins.
4. Standard contact material consists of copper alloy with gold plating over nickel.
5. A broad range of other front and rear connector accessories are available. See our website and/or contact factory for complete information.
6. Standard insert is high insulation synthetic rubber.

© 2015 Glenair, Inc. U.S. CAGE Code 06324 Printed in Italy

Downloaded from Arrow.com.

IPT 00 M
Wall Mounting Receptacle
with Backshell
for EMI Shield Termination and Shrink Boot

TABLE I: DIMENSIONS

Shell size	D +0 -1	B +0.5 0	C min.	G ±0.4	H ±0.1	ØM +0.1 0	L Max.	K Key
8	14.0	16	6.6	20.6	15.10	3.04	52.0	18
10	16.0	18	9.2	23.8	18.25	3.04	52.0	21
12	20.0	22	12.2	26.2	20.60	3.04	52.0	24
14	23.0	25	15.2	28.6	23.00	3.04	53.0	28
16	26.0	28	18.3	31.0	24.60	3.04	53.0	31
18	28.5	32	20.0	33.3	27.00	3.04	53.0	34
20	30.5	34	23.0	36.5	29.40	3.04	57.0	37
22	34.5	38	26.0	39.7	31.75	3.04	57.0	41
24	37.5	41	28.8	42.8	34.92	3.73	58.5	44

TABLE II: MODIFICATION CODES

CONTACT OPTIONS	
Sym	**Description**
B0	Connector Without Contacts (Only for crimp version)
FINISH OPTIONS	
Sym	**Description and RoHS compliant**
F7	Black Zinc Nickel
F11	Electroless Nickel
MB	Marine Bronze
Omit for standard version (Cadmium Olive Drab Finish)	

© 2015 Glenair, Inc.

GLENAIR, INC. • 1211 AIR WAY • GLENDALE, CA 91201-2497 • 818-247-6000 • FAX 818-500-9912
www.glenair.com
E-Mail: sales@glenair.com

Downloaded from Arrow.com.

IPT 00 W
Wall Mounting Receptacle
with Long Backshell, Metal Sleeve and Gland Seal

Polychloroprene Insert

Connector Shell Styles
00 - Wall Mounting Receptacle

Shell Size and Insert Arrangement

Alternate Insert Rotation
W, X, Y, Z
(Omit for Normal)

Mod. Code Options
See Table II

IPT | 00 | W | 18-11 | P | C | Z | XX

SIPT

Environmental Class
W - Environmental with Long Backshell Metal Sleeeve and Gland Seal

Contact Gender
P - Pin
S - Socket

Contact Type
C - Crimp
(Omit for Solder Cup)

Silicone Insert

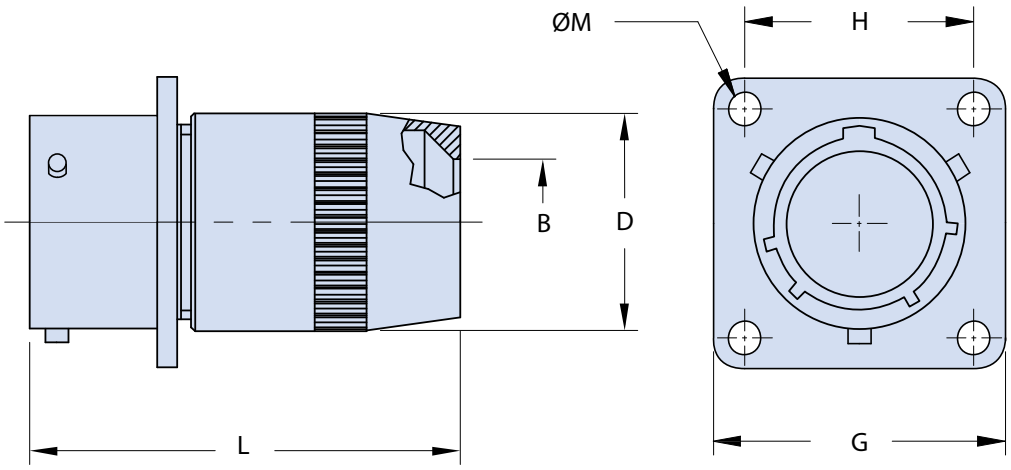

Application Notes

1. Wall mounting receptacle with long backshell, incorporated metal sleeve and gland seal. No cable clamp provided; through mounting holes.
2. Connector/Backshell Class "W" (environmental).
3. Standard materials configuration consists of aluminum alloy with stainless steel coupling pins.
4. Standard contact material consists of copper alloy with gold plating over nickel.
5. A broad range of other front and rear connector accessories are available. See our website and/or contact factory for complete information.
6. Standard insert is high insulation synthetic rubber.

© 2015 Glenair, Inc. U.S. CAGE Code 06324 Printed in Italy

Downloaded from Arrow.com.

IPT 00 W
Wall Mounting Receptacle
with Long Backshell, Metal Sleeve and Gland Seal

TABLE I: DIMENSIONS

Shell size	B min.	B Max.	D Max.	G ±0.4	H ±0.1	ØM +0.1 0	L Max.
8	4.25	6.10	13.90	20.6	15.10	3.04	47.5
10	5.20	7.90	17.15	23.8	18.25	3.04	47.5
12	8.60	11.20	20.60	26.2	20.60	3.04	47.5
14	10.55	13.70	23.90	28.6	23.00	3.04	55.5
16	14.00	15.65	27.50	31.0	24.60	3.04	61.0
18	15.25	17.10	30.90	33.3	27.00	3.04	68.0
20	16.10	19.00	34.10	36.5	29.40	3.04	78.5
22	17.00	21.50	37.50	39.7	31.75	3.04	83.0
24	18.80	22.70	40.30	42.8	34.92	3.73	90.0

TABLE II: MODIFICATION CODES

CONTACT OPTIONS	
Sym	**Description**
B0	Connector Without Contacts (Only for crimp version)
FINISH OPTIONS	
Sym	**Description and RoHS compliant**
F6	Black Electrodeposited Paint
F7	Black Zinc Nickel
F11	Electroless Nickel
MB	Marine Bronze
Omit for standard version (Cadmium Olive Drab Finish)	

© 2015 Glenair, Inc.

GLENAIR, INC. • 1211 AIR WAY • GLENDALE, CA 91201-2497 • 818-247-6000 • FAX 818-500-9912
www.glenair.com
E-Mail: sales@glenair.com

Downloaded from Arrow.com.

IPT 01 A
In-Line Cable Connector
with General Duty Backshell

Polychloroprene Insert	Connector Shell Styles		Shell Size and Insert Arrangement		Alternate Insert Rotation		Mod. Code Options
	00 - Wall Mounting Receptacle				W, X, Y, Z (Omit for Normal)		See Table II
IPT	**01**	**A**	**18-11**	**P**	**Z**	**C**	**XX**
SIPT		**Environmental Class** ***A*** - Non Environmental		**Contact Gender** ***P*** - Pin ***S*** - Socket		**Contact Type** ***C*** - Crimp (Omit for Solder Cup)	
Silicone Insert							

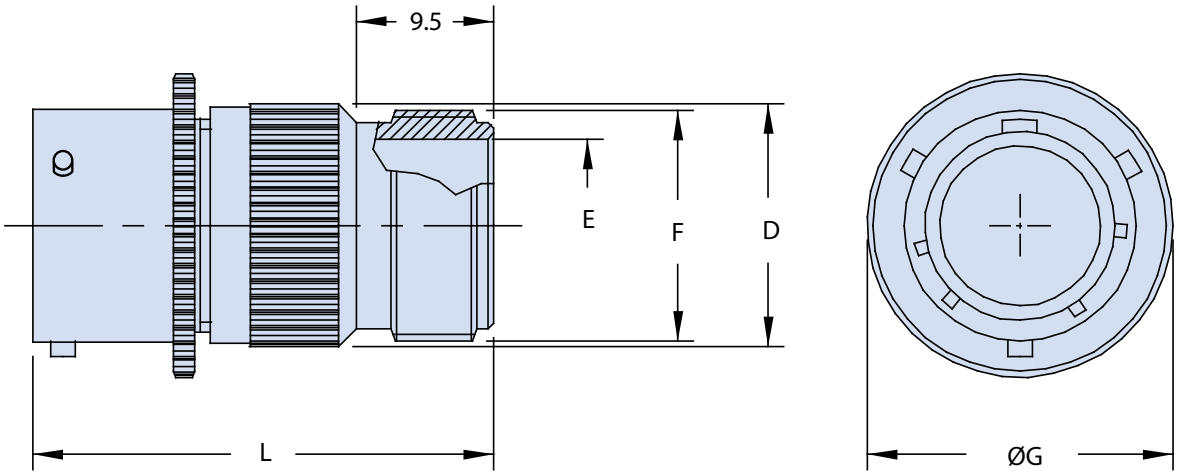

Application Notes

1. In-line cable connector with general duty backshell.
2. Connector Class "A" (non-environmental—no grommet supplied.
3. Standard materials configuration consists of aluminum alloy with stainless steel coupling pins.
4. Standard contact material consists of copper alloy with gold plating over nickel.
5. A broad range of other front and rear connector accessories are available. See our website and/or contact factory for complete information.
6. Standard insert is high insulation synthetic rubber.

© 2015 Glenair, Inc. U.S. CAGE Code 06324 Printed in Italy

Downloaded from Arrow.com.

TABLE I: DIMENSIONS

Shell size	D Max.	E min.	F Thread in inches	ØG ±0.2	L Max.
8	15.00	7.55	.5000 - 28 UNEF	17.3	45.9
10	18.20	10.70	.6250 - 24 UNEF	21.8	45.9
12	21.20	13.85	.7500 - 20 UNEF	25.1	45.9
14	24.60	16.85	.8750 - 20 UNEF	28.6	45.9
16	27.60	20.00	1.0000 - 20 UNEF	30.6	45.9
18	30.90	22.30	1.1875 - 18 UNEF	33.2	45.9
20	33.80	25.75	1.1875 - 18 UNEF	36.5	50.0
22	37.10	28.80	1.4375 - 18 UNEF	39.6	50.0
24	40.25	32.00	1.4375 - 18 UNEF	43.1	50.0

TABLE II: MODIFICATION CODES

CONTACT OPTIONS	
Sym	**Description**
B0	Connector Without Contacts (Only for crimp version)
FINISH OPTIONS	
Sym	**Description and RoHS compliant**
F6	Black Electrodeposited Paint
F7	Black Zinc Nickel
F11	Electroless Nickel
MB	Marine Bronze
Omit for standard version (Cadmium Olive Drab Finish)	

© 2015 Glenair, Inc.

GLENAIR, INC. • 1211 AIR WAY • GLENDALE, CA 91201-2497 • 818-247-6000 • FAX 818-500-9912
www.glenair.com
E-Mail: sales@glenair.com

Downloaded from Arrow.com.

IPT 01 A...N0
In-Line Cable Connector
without Backshell

Polychloroprene Insert	Environmental Class	Shell Size and Insert Arrangement	Alternate Insert Rotation				No Backshell of Any Kind Supplied	
	A...N0 - Non Environmental		W, X, Y, Z (Omit for Normal)					
IPT	**01**	**A**	**18-11**	**P**	**Z**	**C**	**N0**	**XX**
SIPT	**Connector Shell Styles** ***00*** - Wall Mounting Receptacle			**Contact Gender** ***P*** - Pin ***S*** - Socket		**Contact Type** ***C*** - Crimp (Omit for Solder Cup)		**Mod. Code Options** See Table II
Silicone Insert								

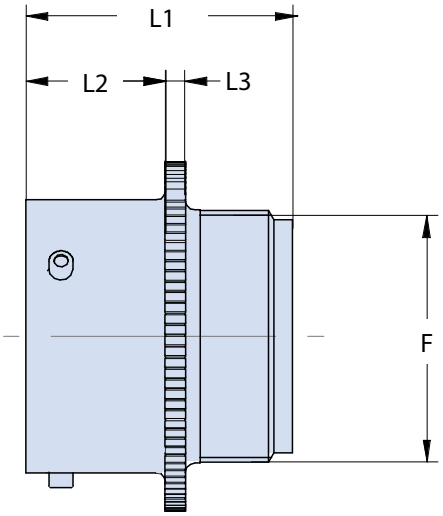

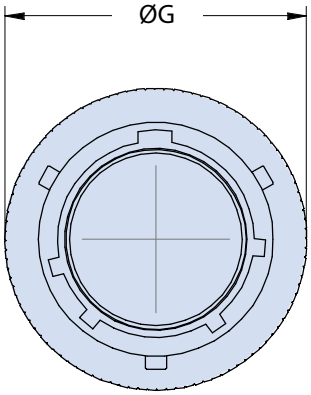

C

Application Notes

1. In-line cable connector without backshell with rear thread for the attachment of additional accessories.
2. Connector Class "A...N0" (non-environmental)—no grommet supplied.
3. Standard materials configuration consists of aluminum alloy with stainless steel coupling pins.
4. Standard contact material consists of copper alloy with gold plating over nickel.
5. A broad range of other front and rear connector accessories are available. See our website and/or contact factory for complete information.
6. Standard insert is high insulation synthetic rubber.

© 2015 Glenair, Inc. U.S. CAGE Code 06324 Printed in Italy

Downloaded from Arrow.com.

IPT 01 A...N0
In-Line Cable Connector
without Backshell

TABLE I: DIMENSIONS

Shell size	ØG ±0.2	L1 Max.	L2 +0.8 -0	L3 Max.	F Thread in inches
8	17.3	21.7	10.94	2.0	.4375 - 28 UNEF
10	21.8	21.4	10.94	2.0	.5625 - 24 UNEF
12	25.1	21.7	10.94	2.0	.6875 - 20 UNEF
14	28.6	21.7	10.94	2.0	.8125 - 20 UNEF
16	30.6	21.4	10.94	2.0	.8375 - 20 UNEF
18	33.2	21.4	10.94	2.0	1.0625 - 18 UNEF
20	36.5	27.0	14.12	2.8	1.1875 - 18 UNEF
22	39.6	27.0	14.12	2.8	1.3125 - 18 UNEF
24	43.1	29.0	14.96	2.8	1.4375 - 18 UNEF

TABLE II: MODIFICATION CODES

CONTACT OPTIONS	
Sym	**Description**
B0	Connector Without Contacts (Only for crimp version)
FINISH OPTIONS	
Sym	**Description and RoHS compliant**
F6	Black Electrodeposited Paint
F7	Black Zinc Nickel
F11	Electroless Nickel
MB	Marine Bronze
Omit for standard version (Cadmium Olive Drab Finish)	

© 2015 Glenair, Inc.

GLENAIR, INC. • 1211 AIR WAY • GLENDALE, CA 91201-2497 • 818-247-6000 • FAX 818-500-9912
www.glenair.com
E-Mail: sales@glenair.com

Downloaded from Arrow.com.

IPT 01 A...PG_ _
In-Line Cable Connector
with PG Threaded Backshell

Polychloroprene Insert	Environmental Class	Shell Size and Insert Arrangement	Alternate Insert Rotation	PG Thread Size
	A...PG - Non Environmental		W, X, Y, Z (Omit for Normal)	See Table I

IPT 01 A 18-11 P Z C PG16 XX

SIPT

Connector Shell Styles
01 - In-Line Cable Connector

Contact Gender
P - Pin
S - Socket

Contact Type
C - Crimp
(Omit for Solder Cup)

Mod. Code Options
See Table II

Silicone Insert

C

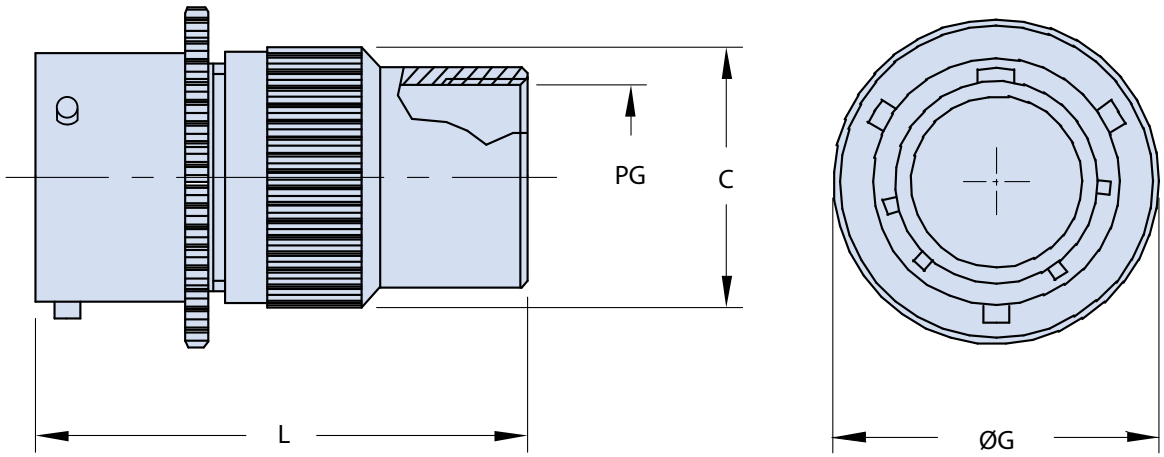

Application Notes

1. In-line cable connector with backshell adapter threaded for use with PG cable glands (not included). Other types of PG adapters can be supplied in various sizes upon request.
2. Connector Class "A" (non-environmental)—no grommet supplied.
3. Standard materials configuration consists of aluminum alloy with stainless steel coupling pins.
4. Standard contact material consists of copper alloy with gold plating over nickel.
5. A broad range of other front and rear connector accessories are available. See our website and/or contact factory for complete information.
6. Standard insert is high insulation synthetic rubber.

© 2015 Glenair, Inc. U.S. CAGE Code 06324 Printed in Italy

Downloaded from Arrow.com.

TABLE I: DIMENSIONS

Shell size	L Max.	C Max.	ØG ±0.2	PG Thread
8	41.0	18.0	17.3	7 – 9
10	41.0	18.0	21.8	7 – 9
12	51.0	23.5	25.1	11
14	51.0	24.5	28.6	9 – 11 – 13.5 – 16
16	56.0	28.0	30.6	9 – 11 – 13.5 – 16 –21
18	56.0	30.5	33.2	13.5 – 16
20	58.5	33.5	36.5	13.5 – 16
22	63.5	37.0	39.6	13.5 – 16 –21
24	66.0	40.0	43.1	13.5 – 16 –21

TABLE II: MODIFICATION CODES

CONTACT OPTIONS	
Sym	**Description**
B0	Connector Without Contacts (Only for crimp version)
FINISH OPTIONS	
Sym	**Description and RoHS compliant**
F6	Black Electrodeposited Paint
F7	Black Zinc Nickel
F11	Electroless Nickel
MB	Marine Bronze
Omit for standard version (Cadmium Olive Drab Finish)	

© 2015 Glenair, Inc.

Downloaded from Arrow.com.

IPT 01 A...PH_ _
In-Line Cable Connector
with Backshell and Plastic PG Cable Gland

Polychloroprene Insert	Environmental Class	Shell Size and Insert Arrangement	Contact Type	PG Cable Gland Size
	A...PH - Non Environmental		***C*** - Crimp (Omit for Solder Cup)	See Table I

IPT	01	A	18-11	P	Z	C	PH16	XX

SIPT	Connector Shell Styles	Contact Gender	Alternate Insert Rotation	Mod. Code Options
Silicone Insert	***01*** - In-Line Cable Connector	***P*** - Pin ***S*** - Socket	W, X, Y, Z (Omit for Normal)	See Table II

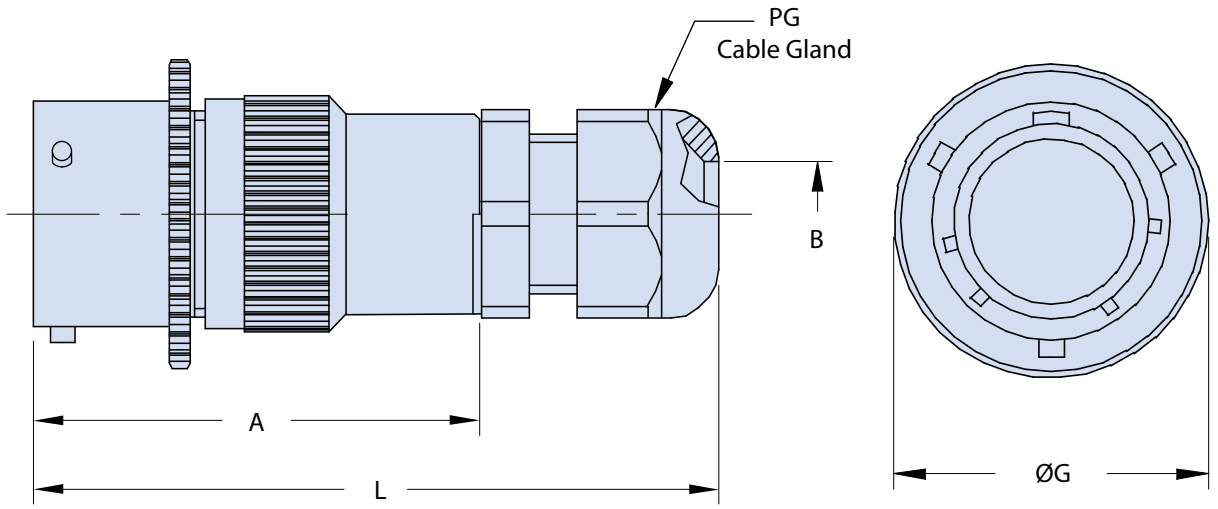

Application Notes

1. In-line cable connector with backshell and plastic PG cable gland. Other types of PG adapters can be supplied in various sizes upon request.
2. Connector Class "A" (non-environmental)––no grommet supplied.
3. Standard materials configuration consists of aluminum alloy with stainless steel coupling pins.
4. Standard contact material consists of copper alloy with gold plating over nickel.
5. A broad range of other front and rear connector accessories are available. See our website and/or contact factory for complete information.
6. Standard insert is high insulation synthetic rubber.

© 2015 Glenair, Inc. U.S. CAGE Code 06324 Printed in Italy

Downloaded from Arrow.com.

IPT 01 A...PH_ _
In-Line Cable Connector
with Backshell and Plastic PG Cable Gland

TABLE I: DIMENSIONS

Shell size	A Max.	B min. - max.	PG Cable Gland Size	L Max.	ØG ±0.2
8	41.0	3 - 6.5 / 4 - 8	7 / 9	65.00	17.3
10	41.0	4 - 8	9	65.00	21.8
12	51.0	5 - 10	11	77.50	25.1
14	51.0	5 - 10 / 6 - 12 / 9 - 14	11 / 13.5 / 16	81.00	28.6
16	56.0	5 - 10 / 6 - 12 / 9 - 14	11 / 13.5 / 16	86.00	30.6
18	56.0	6 - 12 / 9 - 14	13.5 / 16	86.00	33.2
20	58.5	6 - 12 / 9 - 14	13.5 / 16	88.50	36.5
22	63.5	6 - 12 / 9 - 14 / 13 - 18	13.5 / 16 / 21	99.50	39.6
24	66.0	6 - 12 / 9 - 14 / 13 - 18	13 5 / 16 / 21	102.00	43.1

TABLE II: MODIFICATION CODES

CONTACT OPTIONS	
Sym	**Description**
B0	Connector Without Contacts (Only for crimp version)
FINISH OPTIONS	
Sym	**Description and RoHS compliant**
F6	Black Electrodeposited Paint
F7	Black Zinc Nickel
F11	Electroless Nickel
MB	Marine Bronze
Omit for standard version (Cadmium Olive Drab Finish)	

© 2015 Glenair, Inc.

GLENAIR, INC. • 1211 AIR WAY • GLENDALE, CA 91201-2497 • 818-247-6000 • FAX 818-500-9912
www.glenair.com
E-Mail: sales@glenair.com

Downloaded from Arrow.com.

IPT 01 A...PHM_ _
In-Line Cable Connector
with PHM Backshell
and Sleeves to Accommodate Various Cable Sizes

Polychloroprene Insert	Environmental Class	Shell Size and Insert Arrangement	Alternate Insert Rotation	PHM11 Thread Size
	A...PHM - Non Environmental		W, X, Y, Z (Omit for Normal)	See Table I

IPT	01	A	18-11	P	Z	C	PHM11	XX

SIPT	Connector Shell Styles	Contact Gender	Contact Type	Mod. Code Options
Silicone Insert	***01*** - In-Line Cable Connector	***P*** - Pin ***S*** - Socket	***C*** - Crimp (Omit for Solder Cup)	See Table II

C

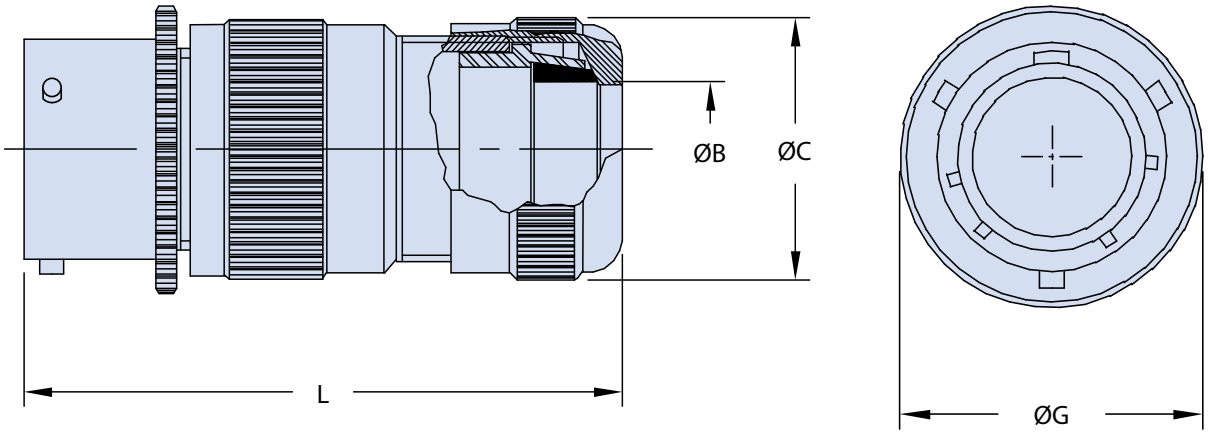

Application Notes

1. In-line cable connector with backshell and PHM cable clamp. Rubber sleeves included to allow use of different cable diameters.
2. Connector Class "A" (non-environmental)—no grommet supplied.
3. Standard materials configuration consists of aluminum alloy with stainless steel coupling pins.
4. Standard contact material consists of copper alloy with gold plating over nickel.
5. A broad range of other front and rear connector accessories are available. See our website and/or contact factory for complete information.
6. Standard insert is high insulation synthetic rubber.

© 2015 Glenair, Inc. U.S. CAGE Code 06324 Printed in Italy

Downloaded from Arrow.com.

IPT 01 A...PHM_ _
In-Line Cable Connector
with PHM Backshell
and Sleeves to Accommodate Various Cable Sizes

TABLE I: DIMENSIONS

Shell size	P.N. PHM	ØB min. - max.	C Max.	ØG ±0.2	L Max.
8	7	2 - 7	15	17.3	55.0
10	9	2 - 9	21	21.8	55.0
12	11	2 - 11	24	25.1	65.0
14	11	2 - 11	24	28.6	65.0
16	11	2 - 11	24	30.6	65.0
18	11 / 18	2 - 11 / 9 - 16.5	42	33.2	80.0
20	18	9 - 16.5	42	36.5	81.5
22	18	9 - 16.5	42	39.6	81.5
24	18 / 22 / 24	9 - 16.5 / 15 - 20 / 19 - 24	42	43.1	82.0

TABLE II: MODIFICATION CODES

CONTACT OPTIONS	
Sym	**Description**
B0	Connector Without Contacts (Only for crimp version)
FINISH OPTIONS	
Sym	**Description and RoHS compliant**
F6	Black Electrodeposited Paint
F7	Black Zinc Nickel
F11	Electroless Nickel
MB	Marine Bronze
Omit for standard version (Cadmium Olive Drab Finish)	

© 2015 Glenair, Inc.

GLENAIR, INC. • 1211 AIR WAY • GLENDALE, CA 91201-2497 • 818-247-6000 • FAX 818-500-9912
www.glenair.com
E-Mail: sales@glenair.com

Downloaded from Arrow.com.

IPT 01 A...SR
In-Line Cable Connector
with Backshell, Cable Clamp and Bushing

Polychloroprene Insert	Environmental Class	Shell Size and Insert Arrangement	Alternate Insert Rotation	Cable Clamp with Bushing
	A...SR - Non Environmental		W, X, Y, Z (Omit for Normal)	

IPT 01 A 18-11 P Z C SR XX

SIPT

Silicone Insert

Connector Shell Styles
01 - In-Line Cable Connector

Contact Gender
P - Pin
S - Socket

Contact Type
C - Crimp
(Omit for Solder Cup)

Mod. Code Options
See Table II

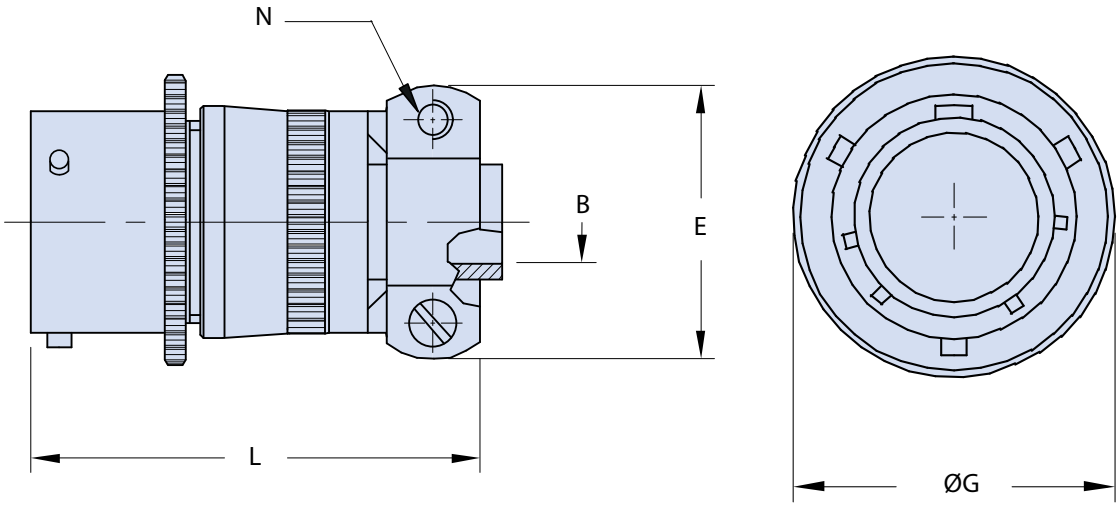

Application Notes

1. In-line cable connector with backshell, cable clamp and bushing for cable protection.
2 Connector Class "A" (non-environmental)––no grommet supplied.
3. Standard materials configuration consists of aluminum alloy with stainless steel coupling pins.
4. Standard contact material consists of copper alloy with gold plating over nickel.
5. A broad range of other front and rear connector accessories are available. See our website and/or contact factory for complete information.
6. Standard insert is high insulation synthetic rubber.

© 2015 Glenair, Inc. U.S. CAGE Code 06324 Printed in Italy

Downloaded from Arrow.com.

TABLE I: DIMENSIONS

Shell size	B ±0.25	E ±0.2	ØG ±0.2	L Max.	N Thread
8	3.2	19.10	17.3	48.5	6 - 32
10	4.8	20.70	21.8	48.5	6 - 32
12	7.9	23.90	25.1	48.5	6 - 32
14	9.5	27.00	28.6	48.5	6 - 32
16	12.7	28.60	30.6	52.0	6 - 32
18	15.9	35.00	33.2	52.0	8 - 32
20	15.9	35.00	36.5	60.5	8 - 32
22	19.0	39.75	39.6	60.5	8 - 32
24	20.3	42.10	43.1	63.0	8 - 32

TABLE II: MODIFICATION CODES

CONTACT OPTIONS	
Sym	**Description**
B0	Connector Without Contacts (Only for crimp version)
FINISH OPTIONS	
Sym	**Description and RoHS compliant**
F6	Black Electrodeposited Paint
F7	Black Zinc Nickel
F11	Electroless Nickel
MB	Marine Bronze
Omit for standard version (Cadmium Olive Drab Finish)	

© 2015 Glenair, Inc.

Downloaded from Arrow.com.

IPT 01 E
In-Line Cable Connector
with General Duty Backshell

Polychloroprene Insert	Environmental Class	Shell Size and Insert Arrangement	Alternate Insert Rotation	Mod. Code Options
	E - Environmental With Real Wire Sealing Grommet		W, X, Y, Z (Omit for Normal)	See Table II

IPT 01 E 18-11 P Z C XX

SIPT

Silicone Insert

Connector Shell Styles
00 - Wall Mounting Receptacle

Contact Gender
P - Pin
S - Socket

Contact Type
C - Crimp
(Omit for Solder Cup)

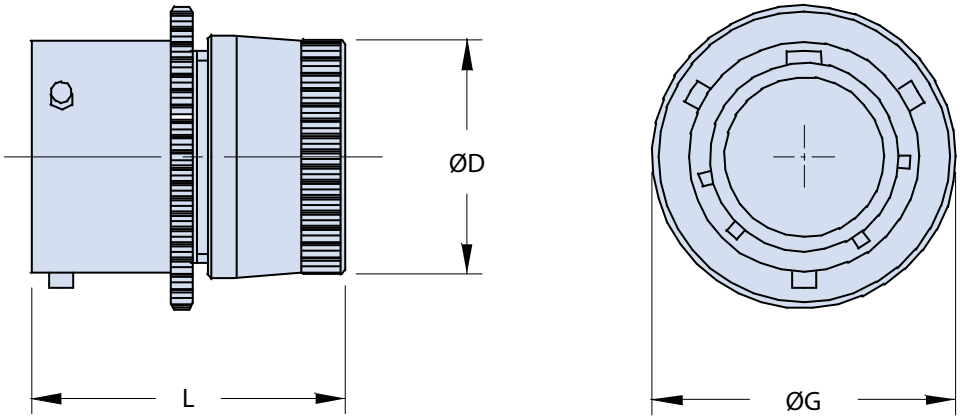

Application Notes

1. In-Line Cable Connector Class "E" (environmental)––Wire sealing grommet and general duty backshell supplied.
2. Standard materials configuration consists of aluminum alloy with stainless steel coupling pins.
3. Standard contact material consists of copper alloy with gold plating over nickel.
4. A broad range of other front and rear connector accessories are available. See our website and/or contact factory for complete information.
5. Standard insert is high insulation synthetic rubber.

© 2015 Glenair, Inc. U.S. CAGE Code 06324 Printed in Italy

Downloaded from Arrow.com.

TABLE I: DIMENSIONS

Shell size	ØD Max.	ØG ±0.2	L Max.
8	15.44	17.3	32.15
10	18.64	21.8	32.15
12	21.79	25.1	32.15
14	25.00	28.6	32.15
16	28.19	30.6	32.15
18	31.34	33.2	32.15
20	34.54	36.5	38.50
22	37.69	39.6	38.50
24	40.89	43.1	40.10

TABLE II: MODIFICATION CODES

CONTACT OPTIONS	
Sym	**Description**
B0	Connector Without Contacts (Only for crimp version)
FINISH OPTIONS	
Sym	**Description and RoHS compliant**
F6	Black Electrodeposited Paint
F7	Black Zinc Nickel
F11	Electroless Nickel
MB	Marine Bronze
Omit for standard version (Cadmium Olive Drab Finish)	

© 2015 Glenair, Inc.

GLENAIR, INC. • 1211 AIR WAY • GLENDALE, CA 91201-2497 • 818-247-6000 • FAX 818-500-9912
www.glenair.com
E-Mail: sales@glenair.com

Downloaded from Arrow.com.

IPT 01 E...SR
In-Line Cable Connector
with Backshell, Cable Clamp and Bushing

Polychloroprene Insert	Environmental Class	Shell Size and Insert Arrangement	Alternate Insert Rotation	Cable Clamp with Bushing
	E...SR - Environmental		W, X, Y, Z (Omit for Normal)	

IPT 01 E 18-11 P Z C SR XX

SIPT

Silicone Insert

Connector Shell Styles
01 - In-Line Cable Connector

Contact Gender
P - Pin
S - Socket

Contact Type
C - Crimp
(Omit for Solder Cup)

Mod. Code Options
See Table II

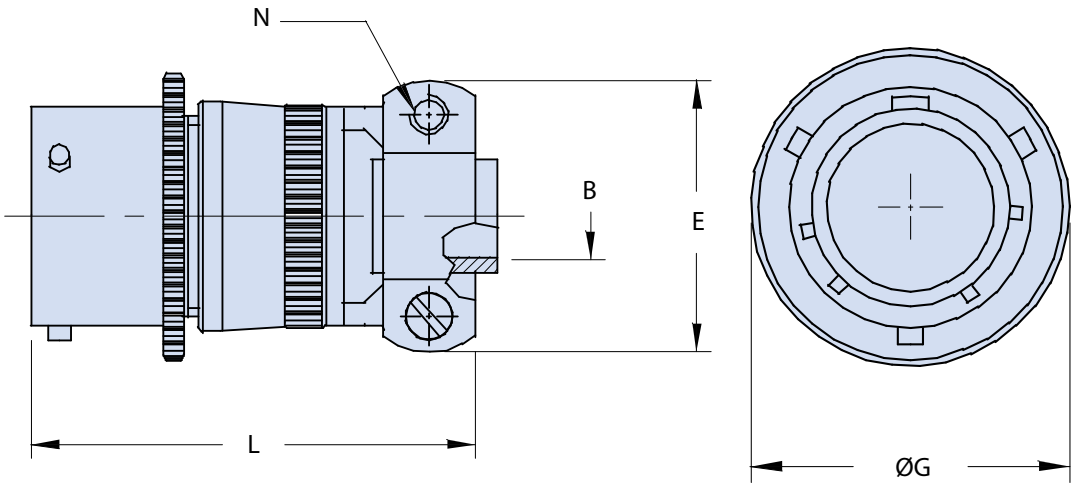

Application Notes

1. In-line cable connector with sealing grommet, cable clamp and bushing for cable protection.
2. Connector Class "E" (environmental)––Wire sealing grommet supplied.
3. Standard materials configuration consists of aluminum alloy with stainless steel coupling pins.
4. Standard contact material consists of copper alloy with gold plating over nickel.
5. A broad range of other front and rear connector accessories are available. See our website and/or contact factory for complete information.
6. Standard insert is high insulation synthetic rubber.

© 2015 Glenair, Inc. U.S. CAGE Code 06324 Printed in Italy

Downloaded from Arrow.com.

IPT 01 E...SR
In-Line Cable Connector
with Backshell, Cable Clamp and Bushing

TABLE I: DIMENSIONS

Shell size	B ±0.25	E ±0.2	ØG ±0.2	L Max.	N Thread
8	3.2	19.10	17.3	48.5	6 - 32
10	4.8	20.70	21.8	48.5	6 - 32
12	7.9	23.90	25.1	48.5	6 - 32
14	9.5	27.00	28.6	48.5	6 - 32
16	12.7	28.60	30.6	52.0	6 - 32
18	15.9	35.00	33.2	52.0	8 - 32
20	15.9	35.00	36.5	60.5	8 - 32
22	19.0	39.75	39.6	60.5	8 - 32
24	20.3	42.10	43.1	63.0	8 - 32

TABLE II: MODIFICATION CODES

CONTACT OPTIONS	
Sym	**Description**
B0	Connector Without Contacts (Only for crimp version)
FINISH OPTIONS	
Sym	**Description and RoHS compliant**
F6	Black Electrodeposited Paint
F7	Black Zinc Nickel
F11	Electroless Nickel
MB	Marine Bronze
Omit for standard version (Cadmium Olive Drab Finish)	

© 2015 Glenair, Inc.

GLENAIR, INC. • 1211 AIR WAY • GLENDALE, CA 91201-2497 • 818-247-6000 • FAX 818-500-9912
www.glenair.com
E-Mail: sales@glenair.com

Downloaded from Arrow.com.

IPT 01 G
In-Line Cable Connector
with Shrink Boot Backshell

Polychloroprene Insert	Environmental Class	Shell Size and Insert Arrangement	Alternate Insert Rotation	Mod. Code Options
	G - Environmental with Shrink Boot Backshell		W, X, Y, Z (Omit for Normal)	See Table II

IPT 01 G 18-11 P Z C XX

SIPT — Silicone Insert

Connector Shell Styles
01 - In-Line Cable Connector

Contact Gender
P - Pin
S - Socket

Contact Type
C - Crimp
(Omit for Solder Cup)

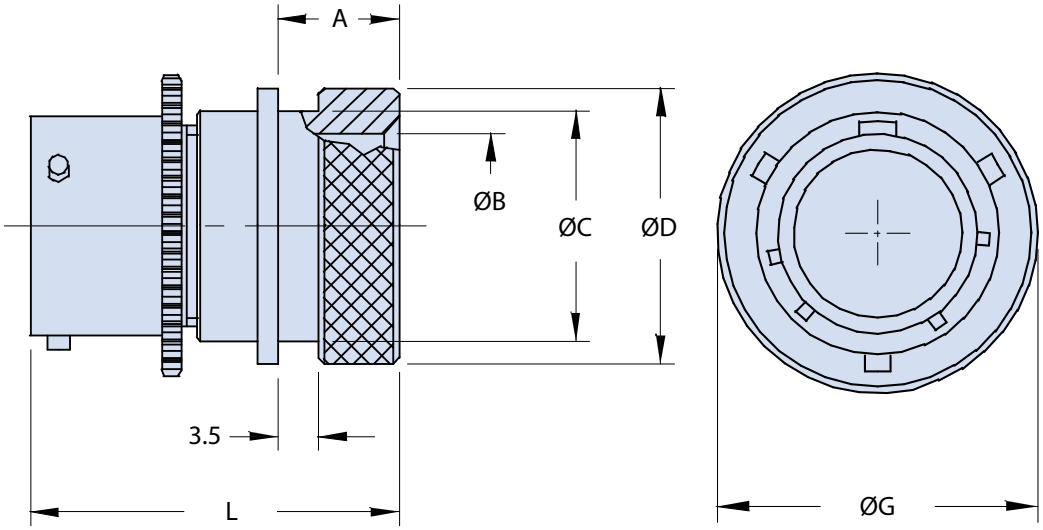

Application Notes

1. In-line cable connector with sealing grommet and backshell for heat shrink boot.
2. Connector/Backshell Class "G" (environmental)––Wire sealing grommet supplied.
3. Standard materials configuration consists of aluminum alloy with stainless steel coupling pins.
4. Standard contact material consists of copper alloy with gold plating over nickel.
5. A broad range of other front and rear connector accessories are available. See our website and/or contact factory for complete information.
6. Standard insert is high insulation synthetic rubber.

© 2015 Glenair, Inc. U.S. CAGE Code 06324 Printed in Italy

Downloaded from Arrow.com.

TABLE I: DIMENSIONS

Shell size	A ±0.1	ØB +0.1 -0	ØC +0 -0.1	ØD +0 -0.3	L Max.	ØG ±0.2
8	12.2	8.20	13.0	15.5	43.5	17.3
10	12.2	11.40	15.8	18.3	42.0	21.8
12	12.2	14.55	21.0	23.6	42.0	25.1
14	12.2	17.50	21.8	24.4	42.0	28.6
16	14.5	20.60	25.9	29.7	44.0	30.6
18	14.5	23.15	28.2	31.9	44.5	33.2
20	15.8	26.50	32.2	36.0	48.5	36.5
22	15.8	29.60	34.5	38.4	48.5	39.6
24	14.9	32.80	37.6	41.5	48.5	43.1

TABLE II: MODIFICATION CODES

CONTACT OPTIONS	
Sym	**Description**
B0	Connector Without Contacts (Only for crimp version)
FINISH OPTIONS	
Sym	**Description and RoHS compliant**
F6	Black Electrodeposited Paint
F7	Black Zinc Nickel
F11	Electroless Nickel
MB	Marine Bronze
Omit for standard version (Cadmium Olive Drab Finish)	

© 2015 Glenair, Inc.

GLENAIR, INC. • 1211 AIR WAY • GLENDALE, CA 91201-2497 • 818-247-6000 • FAX 818-500-9912
www.glenair.com
E-Mail: sales@glenair.com

Downloaded from Arrow.com.

IPT 01 J
In-Line Cable Connector
with Backshell, Cable Clamp and Sleeve

Polychloroprene Insert	Environmental Class		Shell Size and Insert Arrangement		Alternate Insert Rotation		Mod. Code Options
	J- Environmental with Long Backshell and Cable Clamp				W, X, Y, Z (Omit for Normal)		See Table II
IPT	01	J	18-11	P	Z	C	XX
SIPT	Connector Shell Styles *01* - In-Line Cable Connector			Contact Gender *P* - Pin *S* - Socket		Contact Type *C* - Crimp (Omit for Solder Cup)	
Silicone Insert							

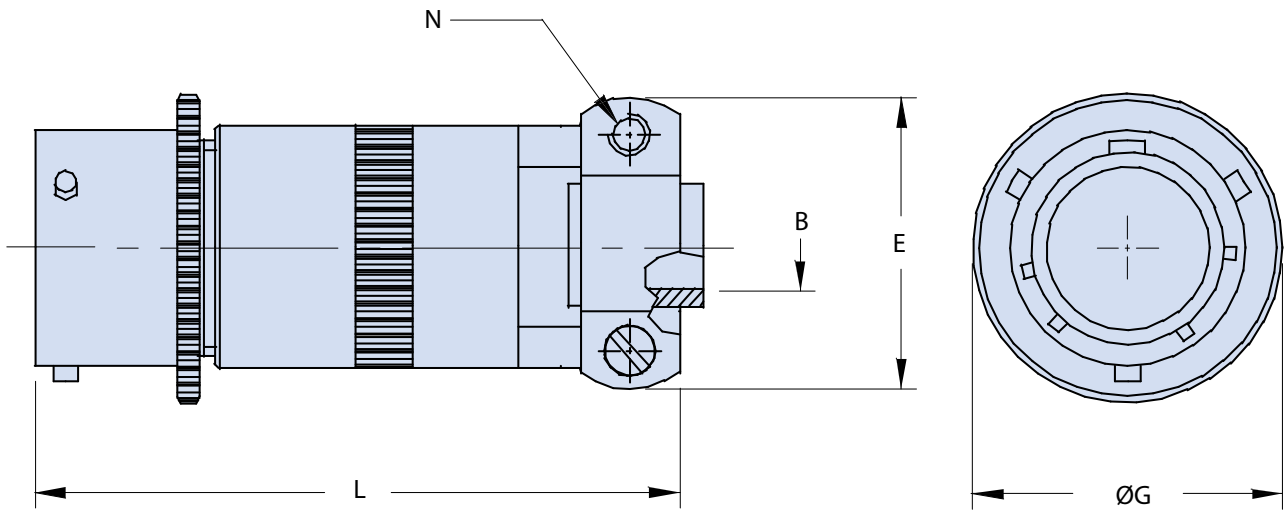

Application Notes

1. In-line cable connector with backshell, incorporated metal sleeve and cable clamp.
2. Connector/Backshell Class "J" (environmental)––No grommet supplied.
3. Standard materials configuration consists of aluminum alloy with stainless steel coupling pins.
4. Standard contact material consists of copper alloy with gold plating over nickel.
5. A broad range of other front and rear connector accessories are available. See our website and/or contact factory for complete information.
6. Standard insert is high insulation synthetic rubber.

© 2015 Glenair, Inc. U.S. CAGE Code 06324 Printed in Italy

Downloaded from Arrow.com.

IPT 01 J
In-Line Cable Connector
with Backshell, Cable Clamp and Sleeve

TABLE I: DIMENSIONS

Shell size	B ±0.25	E ±0.2	ØG ±0.2	L Max.	N Thread
8	3.2	19.10	17.3	56	6 - 32
10	4.8	20.70	21.8	56	6 - 32
12	7.9	23.90	25.1	59	6 - 32
14	9.5	27.00	28.6	66	6 - 32
16	12.7	28.60	30.6	72	6 - 32
18	15.9	35.00	33.2	79	8 - 32
20	15.9	35.00	36.5	90	8 - 32
22	19.0	39.75	39.6	95	8 - 32
24	20.3	42.10	43.1	102	8 - 32

TABLE II: MODIFICATION CODES

CONTACT OPTIONS	
Sym	**Description**
B0	Connector Without Contacts (Only for crimp version)
FINISH OPTIONS	
Sym	**Description and RoHS compliant**
F6	Black Electrodeposited Paint
F7	Black Zinc Nickel
F11	Electroless Nickel
MB	Marine Bronze
Omit for standard version (Cadmium Olive Drab Finish)	

© 2015 Glenair, Inc.

GLENAIR, INC. • 1211 AIR WAY • GLENDALE, CA 91201-2497 • 818-247-6000 • FAX 818-500-9912
www.glenair.com
E-Mail: sales@glenair.com

Downloaded from Arrow.com.

IPT 01 M
In-Line Cable Connector
with Backshell for
EMI Shield Termination and Shrink Boot

Polychloroprene Insert

Connector Shell Styles
01 - In-Line Cable Connector

Shell Size and Insert Arrangement

Alternate Insert Rotation
W, X, Y, Z
(Omit for Normal)

Mod. Code Options
See Table II

IPT 01 M 18-11 P Z C XX

SIPT

Silicone Insert

Environmental Class
M - Environmental with Backshell for EMI Shield Termination and Cable Shrink Boot

Contact Gender
P - Pin
S - Socket

Contact Type
C - Crimp
(Omit for Solder Cup)

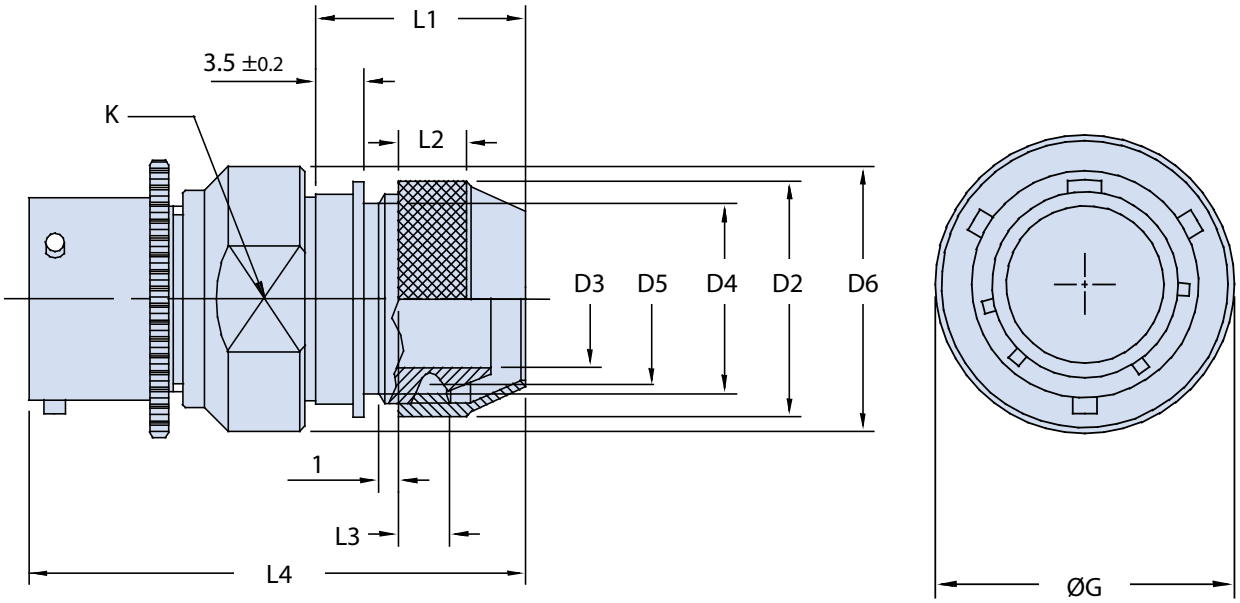

Application Notes

1. In-line cable connector with backshell for terminating EMI shielding and attaching heat shrink boots.
2. Connector/Backshell Class "M" (environmental)––Wire sealing grommet supplied.
3. Standard materials configuration consists of aluminum alloy with stainless steel coupling pins.
4. Standard contact material consists of copper alloy with gold plating over nickel.
5. A broad range of other front and rear connector accessories are available. See our website and/or contact factory for complete information.
6. Standard insert is high insulation synthetic rubber.

© 2015 Glenair, Inc. U.S. CAGE Code 06324 Printed in Italy

Downloaded from Arrow.com.

IPT 01 M
In-Line Cable Connector
with Backshell for
EMI Shield Termination and Shrink Boot

TABLE I: DIMENSIONS

Shell size	K Key	ØG ±0.2	D2 +0.5 -0	D3 min.	D4	D5	D6 Max.	L1 +0 -2.5	L2 +1.5 -0	L3 min.	L4 Max.
8	18	17.3	16	6.6	13.5	M14x1	20	17	5	4	55
10	21	21.8	18	9.2	16.0	M16x1	23	17	5	4	55
12	24	25.1	22	12.2	20.0	M20x1	27	17	7	5	55
14	28	28.6	25	15.2	22.0	M23x1	30	18	8	6	56
16	31	30.6	28	18.3	26.0	M26x1	33	18	8	6	56
18	34	33.2	32	20.0	28.2	M30x1	36	18	10	6	56
20	37	36.5	34	23.0	30.5	M32x1	40	18	10	6	62
22	41	39.6	38	26.0	34.5	M36x1	43	18	10	6	62
24	44	43.1	41	28.8	37.2	M39x1	46	18	10	6	64

TABLE II: MODIFICATION CODES

CONTACT OPTIONS	
Sym	**Description**
B0	Connector Without Contacts (Only for crimp version)
FINISH OPTIONS	
Sym	**Description and RoHS compliant**
F7	Black Zinc Nickel
F11	Electroless Nickel
MB	Marine Bronze
Omit for standard version (Cadmium Olive Drab Finish)	

© 2015 Glenair, Inc.

GLENAIR, INC. • 1211 AIR WAY • GLENDALE, CA 91201-2497 • 818-247-6000 • FAX 818-500-9912
www.glenair.com
E-Mail: sales@glenair.com

Downloaded from Arrow.com.

IPT 01 W
In-Line Cable Connector
with Long Backshell, Metal Sleeve and Gland Seal

Polychloroprene Insert	Connector Shell Styles	Shell Size and Insert Arrangement	Alternate Insert Rotation	Mod. Code Options
	01 - In-Line Cable Connector		W, X, Y, Z (Omit for Normal)	See Table II
IPT	**01**	**18-11**	**C**	**XX**
SIPT				
Silicone Insert				

Environmental Class	Contact Gender	Contact Type
W - Environmental	***P*** - Pin ***S*** - Socket	***C*** - Crimp (Omit for Solder Cup)
W	**P**	**Z**

C

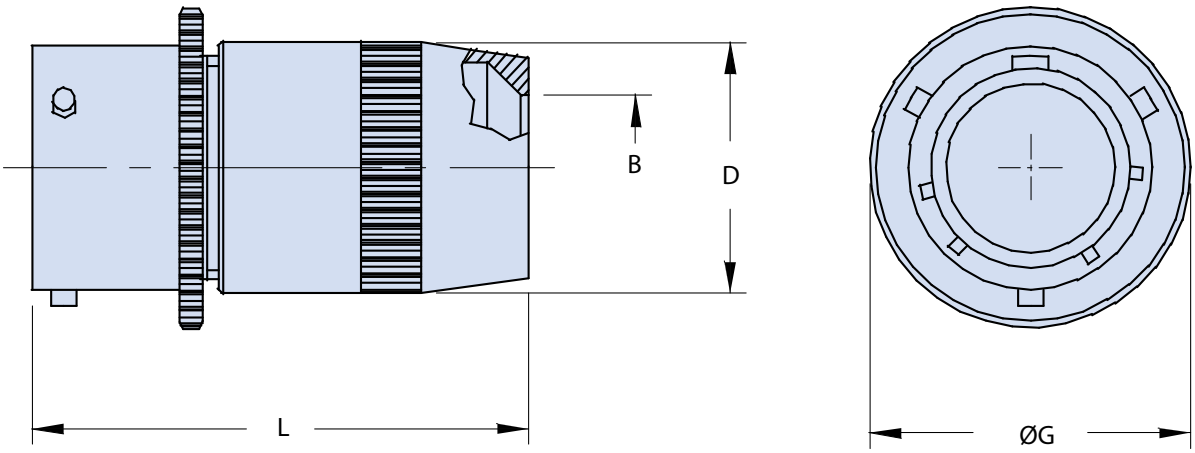

Application Notes

1. In-line cable connector with long backshell, incorporated metal sleeve and gland seal. No cable clamp provided.
2. Connector/Backshell Class "W" (environmental)––No grommet supplied.
3. Standard materials configuration consists of aluminum alloy with stainless steel coupling pins.
4. Standard contact material consists of copper alloy with gold plating over nickel.
5. A broad range of other front and rear connector accessories are available. See our website and/or contact factory for complete information.
6. Standard insert is high insulation synthetic rubber.

© 2015 Glenair, Inc. U.S. CAGE Code 06324 Printed in Italy

Downloaded from Arrow.com.

IPT 01 W
In-Line Cable Connector
with Long Backshell, Metal Sleeve and Gland Seal

Glenair®

TABLE I: DIMENSIONS

Shell size	B min.	B Max.	D Max.	ØG ±0.2	L Max.
8	4.25	6.10	13.90	17.3	47.5
10	5.20	7.90	17.15	21.8	47.5
12	8.60	11.20	20.60	25.1	47.5
14	10.55	13.70	23.90	28.6	55.5
16	14.00	15.65	27.50	30.6	61.0
18	15.25	17.10	30.90	33.2	68.0
20	16.10	19.00	34.10	36.5	78.5
22	17.00	21.50	37.50	39.6	83.0
24	18.80	22.70	40.30	43.1	90.0

TABLE II: MODIFICATION CODES

CONTACT OPTIONS	
Sym	**Description**
B0	Connector Without Contacts (Only for crimp version)
FINISH OPTIONS	
Sym	**Description and RoHS compliant**
F6	Black Electrodeposited Paint
F7	Black Zinc Nickel
F11	Electroless Nickel
MB	Marine Bronze
Omit for standard version (Cadmium Olive Drab Finish)	

© 2015 Glenair, Inc.

GLENAIR, INC. • 1211 AIR WAY • GLENDALE, CA 91201-2497 • 818-247-6000 • FAX 818-500-9912
www.glenair.com
E-Mail: sales@glenair.com

Downloaded from Arrow.com.

IPT 02 PP
Through Bulkhead Receptacle

Polychloroprene Insert	Connector Shell Styles	Shell Size and Insert Arrangement		Alternate Insert Rotation	
	02 - Through Bulkhead			W, X, Y, Z (Omit for Normal)	
IPT	02PP	18-11	P	Z	XX
SIPT					
Silicone Insert			Contact Gender *P* - Pin *S* - Socket		Mod. Code Options See Table II

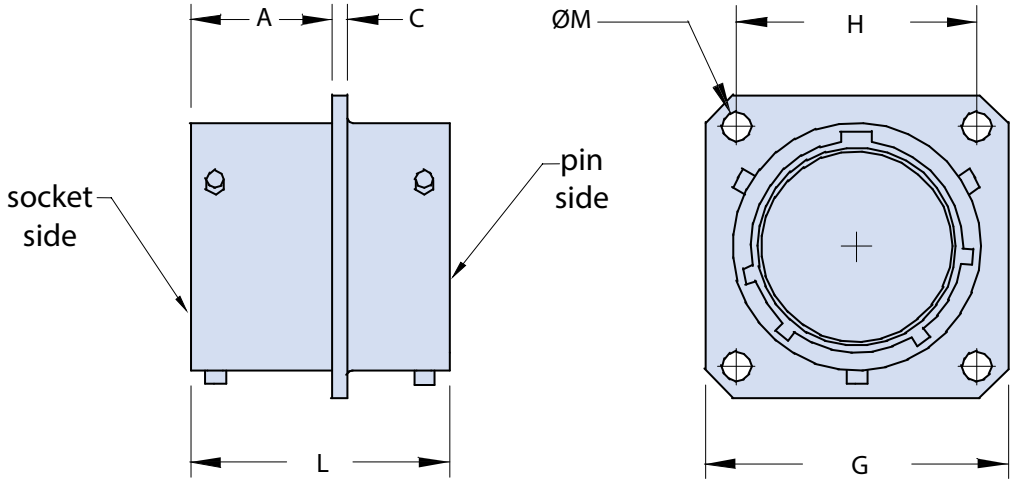

Application Notes

1. Through bulkhead receptacle with solid feedthrough contacts.
2. Through mounting holes.
3. Standard materials configuration consists of aluminum alloy with stainless steel coupling pins.
4. Standard contact material consists of copper alloy with gold plating over nickel.
5. Standard insert is high insulation synthetic rubber.

© 2015 Glenair, Inc. U.S. CAGE Code 06324 Printed in Italy

Downloaded from Arrow.com.

IPT 02 PP
Through Bulkhead Receptacle

TABLE I: DIMENSIONS

Shell size	A +0.2 -0	C ±0.2	L +0.2 -0	G ±0.4	H ±0.1	ØM +0.1 0
8	14.5	1.6	26.5	20.6	15.10	3.04
10	14.5	1.6	26.5	23.8	18.25	3.04
12	14.5	1.6	26.5	26.2	20.60	3.04
14	14.5	1.6	26.5	28.6	23.00	3.04
16	14.5	1.6	26.5	31.0	24.60	3.04
18	14.5	1.6	26.5	33.3	27.00	3.04
20	17.8	2.5	33.5	36.5	29.40	3.04
22	17.8	2.5	33.5	39.7	31.75	3.04
24	17.8	2.5	33.5	42.8	34.92	3.73

TABLE II: MODIFICATION CODES

FINISH OPTIONS	
Sym	**Description and RoHS compliant**
F6	Black Electrodeposited Paint
F7	Black Zinc Nickel
F11	Electroless Nickel
MB	Marine Bronze
Omit for standard version (Cadmium Olive Drab Finish)	

© 2015 Glenair, Inc.

GLENAIR, INC. • 1211 AIR WAY • GLENDALE, CA 91201-2497 • 818-247-6000 • FAX 818-500-9912
www.glenair.com
E-Mail: sales@glenair.com

Downloaded from Arrow.com.

IPT 02 A and IPT 02 E
Box Mounting Receptacle

Polychloroprene Insert	Connector Shell Styles		Shell Size and Insert Arrangement		Alternate Insert Rotation		Mod. Code Options
	02 - Box Mounting Receptacle				W, X, Y, Z (Omit for Normal)		See Table II
IPT	**02**	**A**	**18-11**	**P**	**Z**	**C**	**XX**
SIPT		**Environmental Class** *A* - Non - environmental *E* - Environmental		**Contact Gender** *P* - Pin *S* - Socket		**Contact Type** *C* - Crimp (Omit for Solder Cup)	
Silicone Insert							

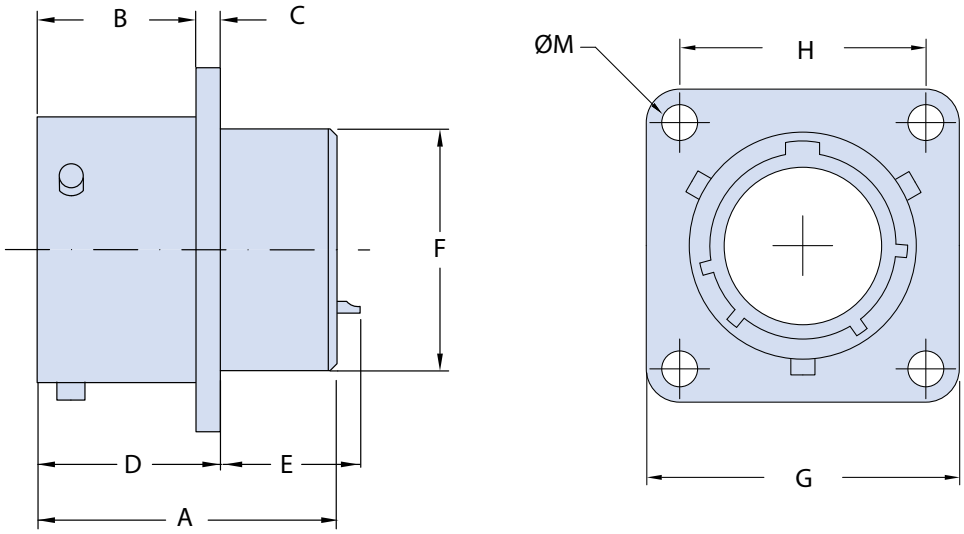

Application Notes

1. Box mount receptacle with through mounting holes; no rear accessory threads.
2. Connector Class "A" (non-environmental).
   Connector Class "E" (environmental).
3. Standard materials configuration consists of aluminum alloy with stainless steel coupling pins.
4. Standard contact material consists of copper alloy with gold plating over nickel.
5. Standard insert is high insulation synthetic rubber.

© 2015 Glenair, Inc. U.S. CAGE Code 06324 Printed in Italy

Downloaded from Arrow.com.

IPT 02 A and IPT 02 E
Box Mounting Receptacle

TABLE I: DIMENSIONS

Shell size	A Max.	B +0.8 -0	C Max.	D +0.6 -0.25	E Max.	F Max.	G ±0.4	H ±0.1	ØM +0.1 0
8	21.0	10.94	2.0	12.5	11.8	11.40	20.6	15.10	3.04
10	21.0	10.94	2.0	12.5	11.8	14.55	23.8	18.25	3.04
12	21.0	10.94	2.0	12.5	11.8	17.75	26.2	20.60	3.04
14	21.0	10.94	2.0	12.5	11.8	20.90	28.6	23.00	3.04
16	21.0	10.94	2.0	12.5	11.8	24.10	31.0	24.60	3.04
18	21.0	10.95	2.0	12.5	11.8	27.25	33.3	27.00	3.04
20	27.4	14.12	2.8	16.5	13.4	30.45	36.5	29.40	3.04
22	27.4	14.12	2.8	16.5	13.4	33.60	39.7	31.75	3.04
24	28.2	14.96	2.8	17.3	12.5	36.80	42.8	34.92	3.73

TABLE II: MODIFICATION CODES

CONTACT OPTIONS	
Sym	**Description**
B0	Connector Without Contacts (Only for crimp version)
FINISH OPTIONS	
Sym	**Description and RoHS compliant**
F6	Black Electrodeposited Paint
F7	Black Zinc Nickel
F11	Electroless Nickel
MB	Marine Bronze
Omit for standard version (Cadmium Olive Drab Finish)	

© 2015 Glenair, Inc.

GLENAIR, INC. • 1211 AIR WAY • GLENDALE, CA 91201-2497 • 818-247-6000 • FAX 818-500-9912
www.glenair.com
E-Mail: sales@glenair.com

Downloaded from Arrow.com.

IPT 02 Y
Box Mounting Receptacle
with Printed Circuit Board Terminations

Polychloroprene Insert	Connector Shell Styles		Shell Size and Insert Arrangement	Alternate Insert Rotation		
	02 - Box Mounting Receptacle			W, X, Y, Z (Omit for Normal)		
IPT	**02**	**Y**	**18-11**	**P**	**Z**	**XX**
SIPT		**Environmental Class** *Y* - PCB Tails No Accessory Threads		**Contact Gender** *P* - Pin *S* - Socket		**Mod. Code Options** See Table II
Silicone Insert						

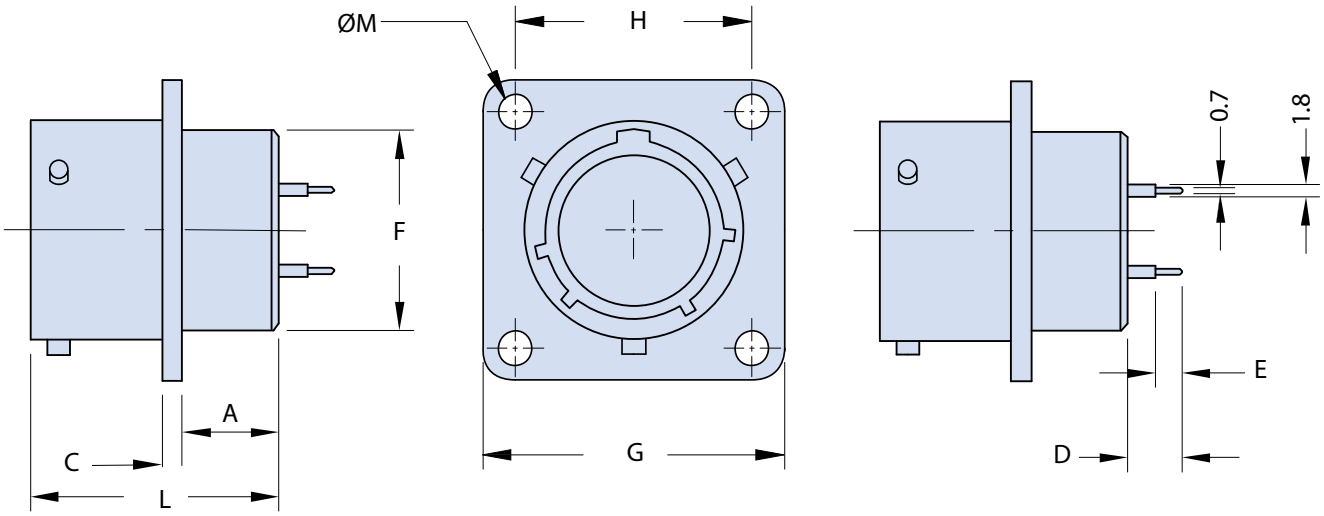

Application Notes

1. Box mounting receptacle with PCB tails and no accessory threads. Printed circuit board terminations. Contact factory for custom tail lengths.
2. Through mounting holes.
3. Standard materials configuration consists of aluminum alloy with stainless steel coupling pins.
4. Standard contact material consists of copper alloy with gold plating over nickel.
5. Standard insert is high insulation synthetic rubber.

© 2015 Glenair, Inc. U.S. CAGE Code 06324 Printed in Italy

Downloaded from Arrow.com.

IPT 02 Y
Box Mounting Receptacle
with Printed Circuit Board Terminations

Glenair®

TABLE I: DIMENSIONS

Shell size	A +0 -0.2	C ±0.1	F Max.	G ±0.4	H ±0.1	ØM +0.1 0	L Max.
8	6.2	1.6	11.40	20.6	15.10	3.04	19.5
10	6.2	1.6	14.55	23.8	18.25	3.04	19.5
12	6.2	1.6	17.75	26.2	20.60	3.04	19.5
14	6.2	1.6	20.90	28.6	23.00	3.04	19.5
16	6.2	1.6	24.10	31.0	24.60	3.04	19.5
18	6.2	1.6	27.25	33.3	27.00	3.04	19.5
20	7.5	2.4	30.45	36.5	29.40	3.04	24.5
22	7.5	2.4	33.60	39.7	31.75	3.04	24.5
24	7.5	2.4	36.80	42.8	34.92	3.73	25.5

TABLE I: DIMENSIONS (CONTINUED FROM ABOVE)

Shell Size	Y		Y1		Y2		YS		YL		YM		YK	
	D ±0.4	E ±0.2	D ±0.4	E ±0.2	D ±0.4	E ±0.2	D ±0.4	E ±0.2	D ±0.4	E ±0.2	D ±0.4	E ±0.2	D ±0.4	E ±0.2
8	8.0	3.6	7.4	3.2	7.8	4.8	5.8	3.2	10.9	6.0	12.4	7.2	8.9	7.1
10	8.0	3.6	7.4	3.2	7.8	4.8	5.8	3.2	10.9	6.0	12.4	7.2	8.9	7.1
12	8.0	3.6	7.4	3.2	7.8	4.8	5.8	3.2	10.9	6.0	12.4	7.2	8.9	7.1
14	8.0	3.6	7.4	3.2	7.8	4.8	5.8	3.2	10.9	6.0	12.4	7.2	8.9	7.1
16	8.0	3.6	7.4	3.2	7.8	4.8	5.8	3.2	10.9	6.0	12.4	7.2	8.9	7.1
18	8.0	3.6	7.4	3.2	7.8	4.8	5.8	3.2	10.9	6.0	12.4	7.2	8.9	7.1
20	7.8	3.6	7.6	3.2	-	-	7.5	3.2	9.3	6.0	-	-	8.1	7.1
22	7.8	3.6	7.6	3.2	-	-	7.5	3.2	9.3	6.0	-	-	8.1	7.1
24	6.7	3.6	6.5	3.2	-	-	6.4	3.2	8.2	6.0	-	-	8.1	7.1

TABLE II: MODIFICATION CODES

FINISH OPTIONS	
Sym	**Description and RoHS compliant**
F6	Black Electrodeposited Paint
F7	Black Zinc Nickel
F11	Electroless Nickel
MB	Marine Bronze
Omit for standard version (Cadmium Olive Drab Finish)	

© 2015 Glenair, Inc.

GLENAIR, INC. • 1211 AIR WAY • GLENDALE, CA 91201-2497 • 818-247-6000 • FAX 818-500-9912
www.glenair.com
E-Mail: sales@glenair.com

Downloaded from Arrow.com.

IPT 06 A
Straight Plug Connector
with Backshell to Accommodate MS3057 Cable Clamp (Not Included)

IPT	G	06	A	18-11	P	Z	C	XX

- **IPT** — Polychloroprene Insert
- **SIPT** — Silicone Insert
- **G** — Grounding Fingers (Omit for Standard)
- **06** — Connector Shell Styles: *06* - Straight Plug
- **A** — Environmental Class: *A* - Non - environmental; *E* - Environmental
- **18-11** — Shell Size and Insert Arrangement
- **P** — Contact Gender: *P* - Pin; *S* - Socket
- **Z** — Alternate Insert Rotation: W, X, Y, Z (Omit for Normal)
- **C** — Contact Type: *C* - Crimp (Omit for Solder Cup)
- **XX** — Mod. Code Options: See Table II

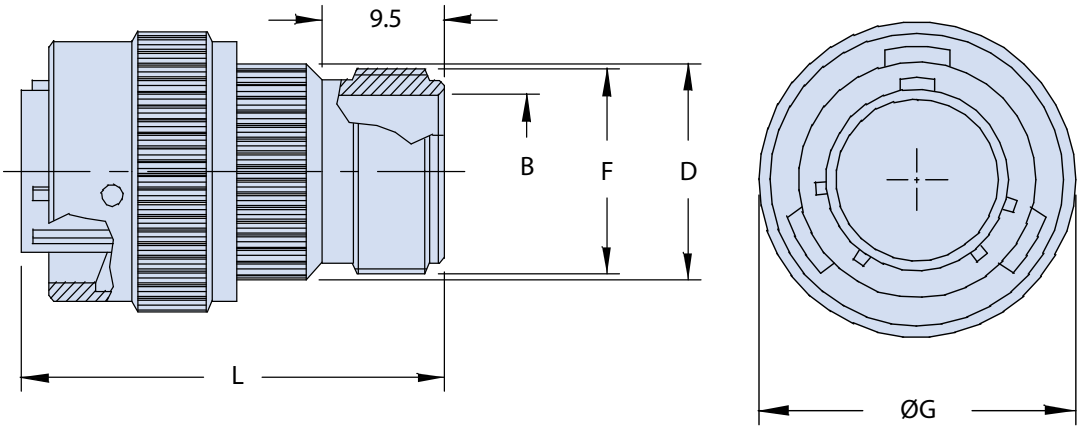

Application Notes

1. Straight plug with backshell for attachment of cable clamp MS3057-A/B/C (not included).
2. Connector Class "A" (non-environmental)––no grommet supplied.
3. Connector Class "E" (environmental)--Wire sealing grommet supplied.
4. Standard materials configuration consists of aluminum alloy.
5. Standard contact material consists of copper alloy with gold plating over nickel.
6. A broad range of other front and rear connector accessories are available. See our website and/or contact factory for complete information.
7. Standard insert is high insulation synthetic rubber.

© 2015 Glenair, Inc. U.S. CAGE Code 06324 Printed in Italy

Downloaded from Arrow.com.

IPT 06 A
Straight Plug Connector
with Backshell to Accommodate MS3057 Cable Clamp (Not Included)

Glenair®

TABLE I: DIMENSIONS

Shell size	B min.	D Max.	F Thread in inches	ØG ±0.2	L Max.
8	6.6	15.00	.5000 - 28 UNEF	18.10	45.90
10	9.2	18.20	.6250 - 24 UNEF	21.05	45.90
12	12.2	21.20	.7500 - 20 UNEF	25.15	45.90
14	15.2	24.60	.8750 - 20 UNEF	28.40	45.90
16	18.3	27.60	1.0000 - 20 UNEF	31.60	45.90
18	20.0	30.90	1.1875 - 18 UNEF	35.00	45.90
20	23.0	33.80	1.1875 - 18 UNEF	37.70	50.00
22	26.0	37.10	1.4375 - 18 UNEF	40.20	50.00
24	28.8	40.25	1.4375 - 18 UNEF	44.00	50.00

TABLE II: MODIFICATION CODES

CONTACT OPTIONS	
Sym	**Description**
B0	Connector Without Contacts (Only for crimp version)
FINISH OPTIONS	
Sym	**Description and RoHS compliant**
F6	Black Electrodeposited Paint
F7	Black Zinc Nickel
F11	Electroless Nickel
MB	Marine Bronze
Omit for standard version (Cadmium Olive Drab Finish)	

© 2015 Glenair, Inc.

GLENAIR, INC. • 1211 AIR WAY • GLENDALE, CA 91201-2497 • 818-247-6000 • FAX 818-500-9912
www.glenair.com
E-Mail: sales@glenair.com

Downloaded from Arrow.com.

IPT 06 A...N0
Straight Plug Connector
with Accessory Threads

IPT	G	06	A	18-11	P	Z	C	N0	XX

- **IPT** — Polychloroprene Insert
- **SIPT** — Silicone Insert
- **G** — Grounding Fingers (Omit for Standard)
- **06** — Connector Shell Styles: *06* - Straight Plug
- **A** — Environmental Class: *A...N0* - Non Environmental
- **18-11** — Shell Size and Insert Arrangement
- **P** — Contact Gender: *P* - Pin; *S* - Socket
- **Z** — Alternate Insert Rotation: W, X, Y, Z (Omit for Normal)
- **C** — Contact Type: *C* - Crimp (Omit for Solder Cup)
- **N0** — No Backshell of Any Kind Supplied
- **XX** — Mod. Code Options: See Table II

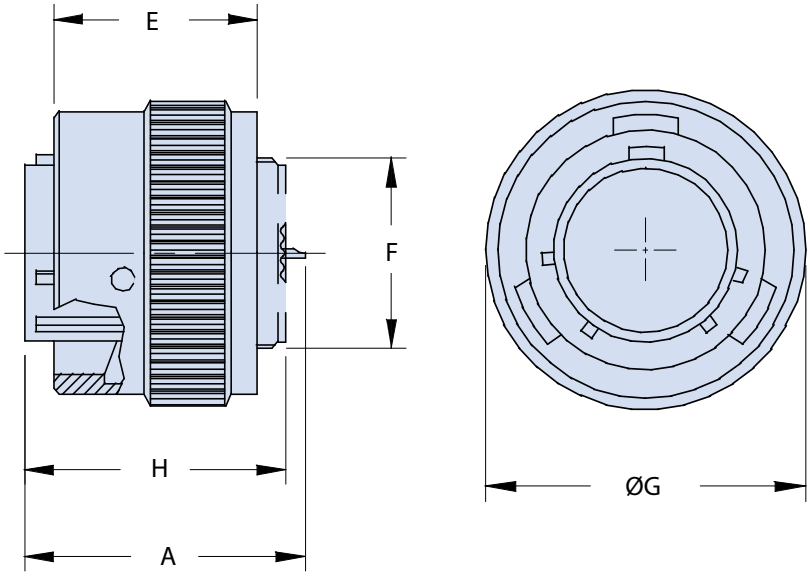

Application Notes

1. Straight plug without backshell.
2. Connector Class "A" (non-environmental)––no grommet supplied.
3. Standard materials configuration consists of aluminum alloy.
4. Standard contact material consists of copper alloy with gold plating over nickel.
5. A broad range of other front and rear connector accessories are available. See our website and/or contact factory for complete information.
6. Standard insert is high insulation synthetic rubber.

© 2015 Glenair, Inc. U.S. CAGE Code 06324 Printed in Italy

Downloaded from Arrow.com.

IPT 06 A...N0
Straight Plug Connector
with Accessory Threads

TABLE I: DIMENSIONS

Shell size	A Max.	H ±0.2	E ±0.2	ØG ±0.2	F Thread in inches
8	25.4	21.4	18	18.10	.4375 - 28 UNEF
10	25.4	21.4	18	21.05	.5625 - 24 UNEF
12	25.4	21.4	18	25.15	.6875 - 20 UNEF
14	25.4	21.4	18	28.40	.8125 - 20 UNEF
16	25.4	21.4	18	31.60	.9375 - 20 UNEF
18	25.4	21.4	18	35.00	1.0625 - 18 UNEF
20	27.8	25.4	19	37.70	1.1875 - 18 UNEF
22	27.8	25.4	19	40.20	1.3125 - 18 UNEF
24	29.4	27.0	20	44.00	1.4375 - 18 UNEF

TABLE II: MODIFICATION CODES

CONTACT OPTIONS	
Sym	**Description**
B0	Connector Without Contacts (Only for crimp version)
FINISH OPTIONS	
Sym	**Description and RoHS compliant**
F6	Black Electrodeposited Paint
F7	Black Zinc Nickel
F11	Electroless Nickel
MB	Marine Bronze
Omit for standard version (Cadmium Olive Drab Finish)	

© 2015 Glenair, Inc.

GLENAIR, INC. • 1211 AIR WAY • GLENDALE, CA 91201-2497 • 818-247-6000 • FAX 818-500-9912
www.glenair.com
E-Mail: sales@glenair.com

Downloaded from Arrow.com.

IPT 06 A... AT
Straight Plug Connector
with Accessory Threads and Arctic Coupling Nut

Polychloroprene Insert	Connector Shell Styles	Shell Size and Insert Arrangement	Alternate Insert Rotation	Mod. Code Options
	06 - Straight Plug		W, X, Y, Z (Omit for Normal)	See Table II

IPT	G	06	A	18-11	P	Z	C	AT	XX
SIPT	**Grounding Fingers** (Omit for Standard)		**Environmental Class** ***A...AT*** - Non Environmental		**Contact Gender** ***P*** - Pin ***S*** - Socket		**Contact Type** ***C*** - Crimp (Omit for Solder Cup)	Arctic Coupling Nut **Supplied without Backshell**	
Silicone Insert									

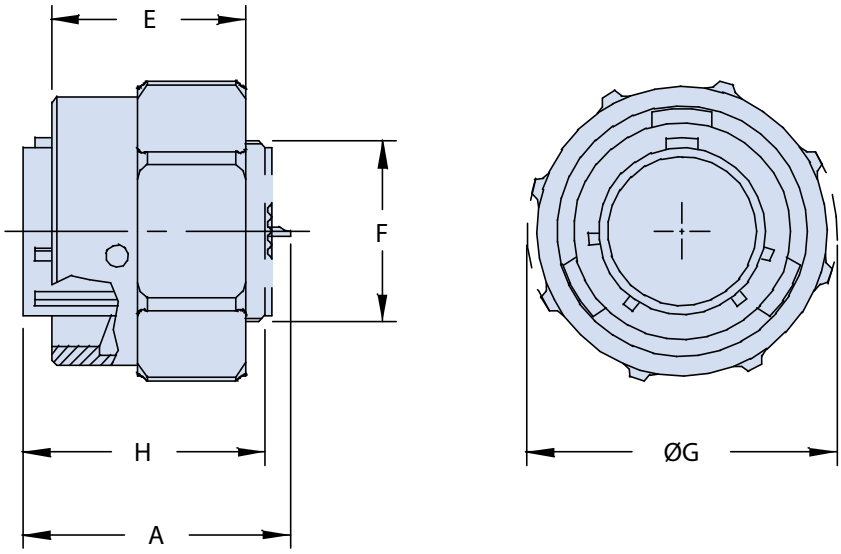

Application Notes

1. Straight plug with Arctic coupling nut (IAW BS9522 F0017).
2. Connector Class "A" (non-environmental)––no grommet supplied.
3. Standard materials configuration consists of aluminum alloy.
4. Standard contact material consists of copper alloy with gold plating over nickel.
5. A broad range of other front and rear connector accessories are available. See our website and/or contact factory for complete information.
6. Standard insert is high insulation synthetic rubber.

© 2015 Glenair, Inc. U.S. CAGE Code 06324 Printed in Italy

Downloaded from Arrow.com.

IPT 06 A...AT
Straight Plug Connector
with Accessory Threads and Arctic Coupling Nut

TABLE I: DIMENSIONS

Shell size	A Max.	H ±0.2	E ±0.2	ØG ±0.2	F Thread in inches
8	25.4	21.4	18	22.5	.4375 - 28 UNEF
10	25.4	21.4	18	24.8	.5625 - 24 UNEF
12	25.4	21.4	18	30.2	.6875 - 20 UNEF
14	25.4	21.4	18	33.6	.8125 - 20 UNEF
16	25.4	21.4	18	37.3	.9375 - 20 UNEF
18	25.4	21.4	18	39.7	1.0625 - 18 UNEF
20	27.8	25.4	19	43.3	1.1875 - 18 UNEF
22	27.8	25.4	19	47.6	1.3125 - 18 UNEF
24	29.4	27.0	20	49.7	1.4375 - 18 UNEF

For accessories and external dimensions see IPT06.

TABLE II: MODIFICATION CODES

CONTACT OPTIONS	
Sym	**Description**
B0	Connector Without Contacts (Only for crimp version)
FINISH OPTIONS	
Sym	**Description and RoHS compliant**
F6	Black Electrodeposited Paint
F7	Black Zinc Nickel
F11	Electroless Nickel
MB	Marine Bronze
Omit for standard version (Cadmium Olive Drab Finish)	

© 2015 Glenair, Inc.

GLENAIR, INC. • 1211 AIR WAY • GLENDALE, CA 91201-2497 • 818-247-6000 • FAX 818-500-9912
www.glenair.com
E-Mail: sales@glenair.com

Downloaded from Arrow.com.

IPT 06 A...PG_ _
Straight Plug Connector
with PG Threaded Backshell

Polychloroprene Insert	Connector Shell Styles	Shell Size and Insert Arrangement	Alternate Insert Rotation	Mod. Code Options
	06 - Straight Plug		W, X, Y, Z (Omit for Normal)	See Table II

IPT	G	06	A	18 -11	P	Z	C	PG16	XX

SIPT	Grounding Fingers	Environmental Class	Contact Gender	Contact Type	PG Thread Size
Silicone Insert	(Omit for Standard)	*A...PG* - Non Environmental	*P* - Pin *S* - Socket	*C* - Crimp (Omit for Solder Cup)	See Table I

C

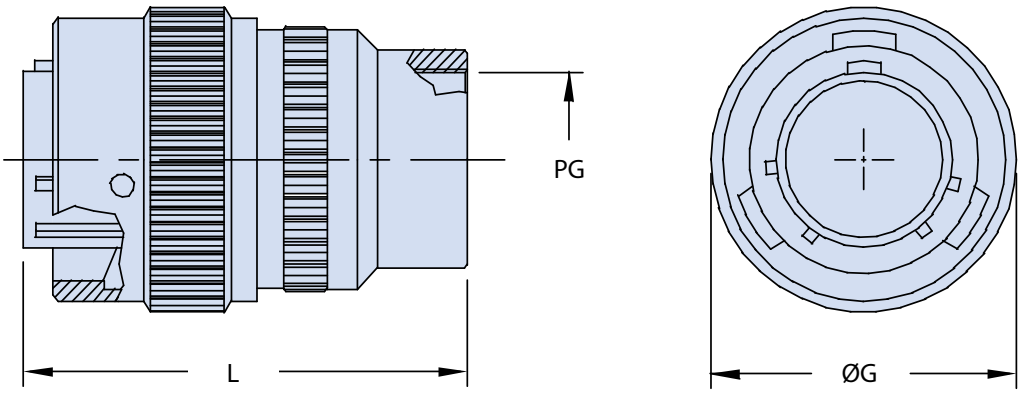

Application Notes

1. Straight plug with backshell for use with PG glands (not included). Other PG sizes and types available upon request.
2. Connector Class "A" (non-environmental)––no grommet supplied.
3. Standard materials configuration consists of aluminum alloy.
4. Standard contact material consists of copper alloy with gold plating over nickel.
5. A broad range of other front and rear connector accessories are available. See our website and/or contact factory for complete information.
6. Standard insert is high insulation synthetic rubber.

© 2015 Glenair, Inc. U.S. CAGE Code 06324 Printed in Italy

Downloaded from Arrow.com.

TABLE I: DIMENSIONS

Shell size	L Max	PG Thread	ØG ±0.2
8	41	7 / 9	18.10
10	41	9	21.05
12	51	11	25.15
14	51	11 / 13.5 / 16	28.40
16	56	11 / 13.5 / 16	31.60
18	56	13.5 / 16	35.00
20	57	13.5 / 16	37.70
22	62	13.5 / 16 / 21	40.20
24	64	13.5 / 16 / 21	44.00

TABLE II: MODIFICATION CODES

CONTACT OPTIONS	
Sym	**Description**
B0	Connector Without Contacts (Only for crimp version)
FINISH OPTIONS	
Sym	**Description and RoHS compliant**
F6	Black Electrodeposited Paint
F7	Black Zinc Nickel
F11	Electroless Nickel
MB	Marine Bronze
Omit for standard version (Cadmium Olive Drab Finish)	

© 2015 Glenair, Inc.

GLENAIR, INC. • 1211 AIR WAY • GLENDALE, CA 91201-2497 • 818-247-6000 • FAX 818-500-9912
www.glenair.com
E-Mail: sales@glenair.com

Downloaded from Arrow.com.

IPT 06 A...PH_ _
Straight Plug Connector
with Backshell and PG Cable Gland

Polychloroprene Insert	Connector Shell Styles	Shell Size and Insert Arrangement	Alternate Insert Rotation	Mod. Code Options
	06 - Straight Plug		W, X, Y, Z (Omit for Normal)	See Table II

IPT	G	06	A	18-11	P	Z	C	PH16	XX

SIPT	Grounding Fingers	Environmental Class	Contact Gender	Contact Type	PG Cable Gland Size
Silicone Insert	(Omit for Standard)	***A...PH*** - Non Environmental	***P*** - Pin ***S*** - Socket	***C*** - Crimp (Omit for Solder Cup)	See Table I

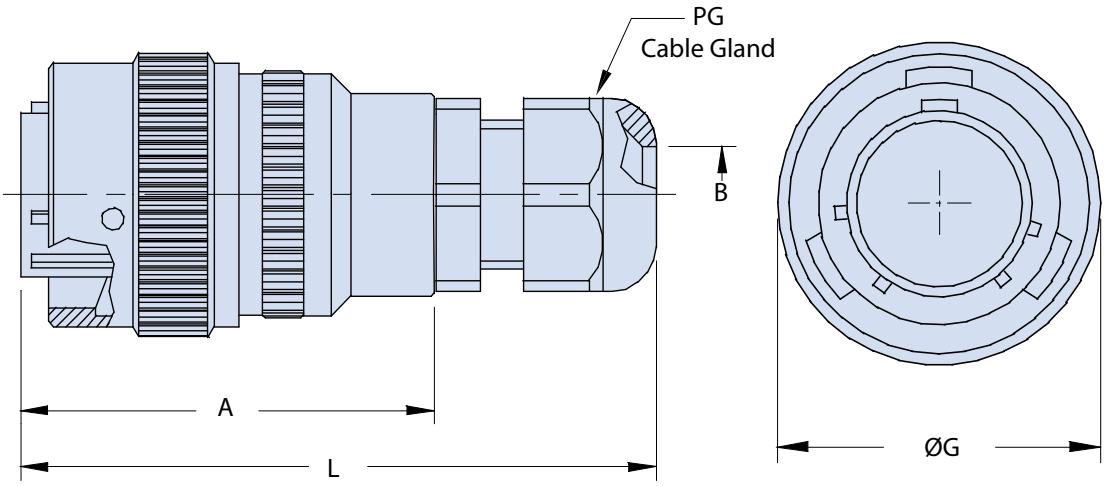

Application Notes

1. Straight plug with backshell and plastic PG cable gland. Other types of PG adapters can be supplied in various sizes upon request.
2. Connector Class "A" (non-environmental)––no grommet supplied.
3. Standard materials configuration consists of aluminum alloy.
4. Standard contact material consists of copper alloy with gold plating over nickel.
5. A broad range of other front and rear connector accessories are available. See our website and/or contact factory for complete information.
6. Standard insert is high insulation synthetic rubber.

© 2015 Glenair, Inc. U.S. CAGE Code 06324 Printed in Italy

Downloaded from Arrow.com.

IPT 06 A...PH_ _
Straight Plug Connector
with Backshell and PG Cable Gland

Glenair®

TABLE I: DIMENSIONS

Shell size	A Max	B min. - max.	PG Cable Gland Size	L Max.	ØG ±0.2
8	41	3 - 6.5 / 4 - 8	7 / 9	65.00	18.10
10	41	4 - 8	9	65.00	21.05
12	51	5 - 10	11	77.50	25.15
14	51	5 - 10 / 6 - 12 / 9 - 14	11 / 13.5 / 16	81.00	28.40
16	56	5 - 10 / 6 - 12 / 9 - 14	11 / 13.5 / 16	86.00	31.60
18	56	6 - 12 / 9 - 14	13.5 / 16	86.00	35.00
20	57	6 - 12 / 9 - 14	13.5 / 16	87.00	37.70
22	62	6 - 12 / 9 - 14 / 13 - 18	13.5 / 16 / 21	98.00	40.20
24	64	6 - 12 / 9 - 14 / 13 - 18	13 5 / 16 / 21	100.00	44.00

TABLE II: MODIFICATION CODES

CONTACT OPTIONS	
Sym	**Description**
B0	Connector Without Contacts (Only for crimp version)
FINISH OPTIONS	
Sym	**Description and RoHS compliant**
F6	Black Electrodeposited Paint
F7	Black Zinc Nickel
F11	Electroless Nickel
MB	Marine Bronze
Omit for standard version (Cadmium Olive Drab Finish)	

© 2015 Glenair, Inc.
U.S. CAGE Code 06324
Printed in Italy

Downloaded from Arrow.com.

IPT 06 A...PHM_ _
Straight Plug Connector
with PHM Backshell
and Sleeves to Accommodate Various Cable Sizes

Polychloroprene Insert	Connector Shell Styles	Shell Size and Insert Arrangement	Alternate Insert Rotation	Mod. Code Options
	06 - Straight Plug		W, X, Y, Z (Omit for Normal)	See Table II

IPT	G	06	A	18-11	P	Z	C	PHM18	XX

SIPT	Grounding Fingers	Environmental Class	Contact Gender	Contact Type	PG Thread Size
Silicone Insert	(Omit for Standard)	***A...PHM*** - Non Environmental	***P*** - Pin ***S*** - Socket	***C*** - Crimp (Omit for Solder Cup)	See Table I

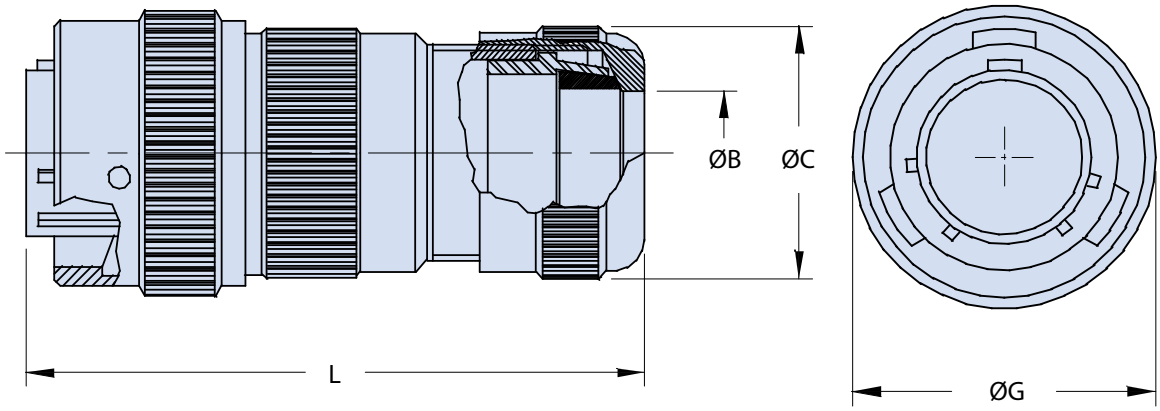

Application Notes

1. Straight plug with PHM backshell includes rubber sleeves to allow use of different diameter cables.
2. Connector Class "A" (non-environmental)––no grommet supplied.
3. Standard materials configuration consists of aluminum alloy.
4. Standard contact material consists of copper alloy with gold plating over nickel.
5. A broad range of other front and rear connector accessories are available. See our website and/or contact factory for complete information.
6. Standard insert is high insulation synthetic rubber.

© 2015 Glenair, Inc. U.S. CAGE Code 06324 Printed in Italy

Downloaded from Arrow.com.

TABLE I: DIMENSIONS

Shell size	P.N. PHM	ØB min. - Max.	ØC Max.	ØG ±0.2	L Max.
8	7	2 - 7	15	18.10	55.00
10	9	2 - 9	21	21.05	55.00
12	11	2 - 11	24	25.15	65.00
14	11	2 - 11	24	28.40	65.00
16	11	2 - 11	24	31.60	65.00
18	11 / 18	2 - 11 / 9 - 16.5	42	35.00	80.00
20	18	9 - 16.5	42	37.70	80.00
22	18	9 - 16.5	42	40.20	80.00
24	18 / 22 / 24	9 - 16.5 / 15 - 20 / 19 - 24	42	44.00	80.00

TABLE II: MODIFICATION CODES

CONTACT OPTIONS	
Sym	**Description**
B0	Connector Without Contacts (Only for crimp version)
FINISH OPTIONS	
Sym	**Description and RoHS compliant**
F6	Black Electrodeposited Paint
F7	Black Zinc Nickel
F11	Electroless Nickel
MB	Marine Bronze
Omit for standard version (Cadmium Olive Drab Finish)	

© 2015 Glenair, Inc.

GLENAIR, INC. • 1211 AIR WAY • GLENDALE, CA 91201-2497 • 818-247-6000 • FAX 818-500-9912
www.glenair.com
E-Mail: sales@glenair.com

Downloaded from Arrow.com.

IPT 06 A...PHM_ _EMI67
Straight Plug Connector
with Backshell for EMI Shield Termination

IPT	G	06	A	18 -11	P	Z	C	PHM18EMI67	XX

- **Polychloroprene Insert** — IPT; **SIPT** — **Silicone Insert**
- **Grounding Fingers** (Omit for Standard) — G
- **Connector Shell Styles** *06* - Straight Plug — 06
- **Environmental Class** *A...PHM* - Non Environmental — A
- **Shell Size and Insert Arrangement** — 18 -11
- **Contact Gender** *P* - Pin, *S* - Socket — P
- **Alternate Insert Rotation** W, X, Y, Z (Omit for Normal) — Z
- **Contact Type** *C* - Crimp (Omit for Solder Cup) — C
- **PG Thread Size** See Table I — PHM18EMI67
- **Mod. Code Options** See Table II — XX

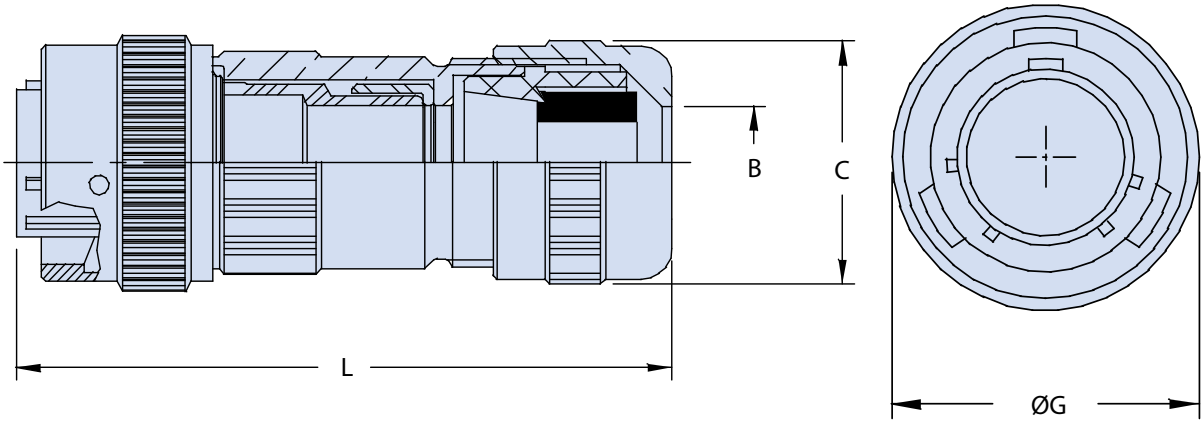

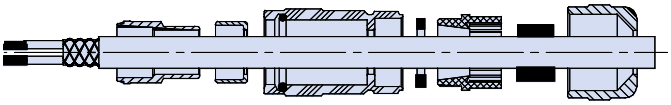

Exploded View

Application Notes

1. Straight plug with PHM backshell includes rubber sleeves to allow use of different diameter cables.
2. Connector Class "A" (non-environmental)––no grommet supplied. PHM connector accessory provides environmental sealing to IP67.
3. Standard materials configuration consists of aluminum alloy.
4. Standard contact material consists of copper alloy with gold plating over nickel.
5. A broad range of other front and rear connector accessories are available. See our website and/or contact factory for complete information.
6. Standard insert is high insulation synthetic rubber.

© 2015 Glenair, Inc. U.S. CAGE Code 06324 Printed in Italy

Downloaded from Arrow.com.

TABLE I: DIMENSIONS

Shell size	P.N. PHM	B min. - max.	C Max.	ØG ±0.2	L Max.
8	7	2 - 7	15.0	18.10	75
10	9	2 - 9	21.0	21.05	75
12	11	2 - 11	24.0	25.15	85
14	11	2 - 11	24.0	28.40	85
16	11	2 - 11	24.0	31.60	85
18	11 / 18	2 - 11 / 9 - 16.5	42.0	35.00	100
20	18	9 - 16.5	42.0	37.70	100
22	18	9 - 16.5	42.0	40.20	100
24	18 / 22 / 24	9 - 16.5 / 15 - 20 / 19 - 24	42.0	44.00	100

TABLE II: MODIFICATION CODES

CONTACT OPTIONS	
Sym	**Description**
B0	Connector Without Contacts (Only for crimp version)
FINISH OPTIONS	
Sym	**Description and RoHS compliant**
F7	Black Zinc Nickel
F11	Electroless Nickel
MB	Marine Bronze
Omit for standard version (Cadmium Olive Drab Finish)	

© 2015 Glenair, Inc.

Downloaded from Arrow.com.

IPT 06 A...SR
Straight Plug Connector
with Backshell, Cable Clamp and Bushing

IPT	G	06	A	18-11	P	Z	C	SR	XX
Polychloroprene Insert	**Grounding Fingers** (Omit for Standard)	**Connector Shell Styles** *06* - Straight Plug	**Environmental Class** *A...SR* - Non Environmental	**Shell Size and Insert Arrangement**	**Contact Gender** *P* - Pin *S* - Socket	**Alternate Insert Rotation** W, X, Y, Z (Omit for Normal)	**Contact Type** *C* - Crimp (Omit for Solder Cup)	**Cable Clamp and Bushing**	**Mod. Code Options** See Table II

SIPT — **Silicone Insert**

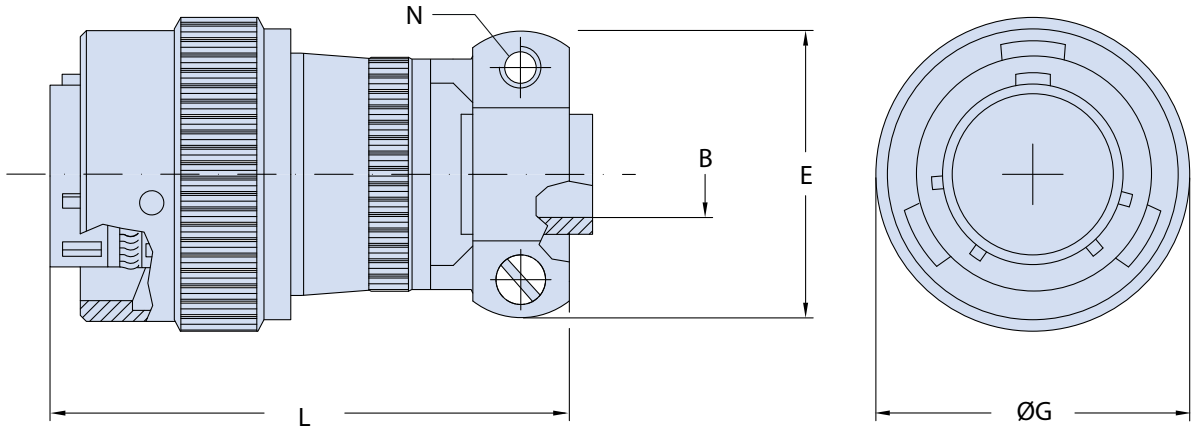

Application Notes

1. Straight plug with cable clamp and bushing.
2. Connector Class "A" (non-environmental)––no grommet supplied.
3. Standard materials configuration consists of aluminum alloy.
4. Standard contact material consists of copper alloy with gold plating over nickel.
5. A broad range of other front and rear connector accessories are available. See our website and/or contact factory for complete information.
6. Standard insert is high insulation synthetic rubber.

© 2015 Glenair, Inc. U.S. CAGE Code 06324 Printed in Italy

Downloaded from Arrow.com.

IPT 06 A...SR
Straight Plug Connector
with Backshell, Cable Clamp and Bushing

TABLE I: DIMENSIONS

Shell size	B ±0.25	E ±0.2	ØG ±0.2	L Max.	N Thread
8	3.2	19.10	18.10	48.5	6 - 32
10	4.8	20.70	21.05	48.5	6 - 32
12	7.9	23.90	25.15	48.5	6 - 32
14	9.5	27.00	28.40	48.5	6 - 32
16	12.7	28.60	31.60	52.0	6 - 32
18	15.9	35.00	35.00	52.0	8 - 32
20	15.9	35.00	37.70	59.0	8 - 32
22	19.0	39.75	40.20	59.0	8 - 32
24	20.3	42.10	44.00	61.0	8 - 32

TABLE II: MODIFICATION CODES

CONTACT OPTIONS	
Sym	**Description**
B0	Connector Without Contacts (Only for crimp version)
FINISH OPTIONS	
Sym	**Description and RoHS compliant**
F6	Black Electrodeposited Paint
F7	Black Zinc Nickel
F11	Electroless Nickel
MB	Marine Bronze
Omit for standard version (Cadmium Olive Drab Finish)	

© 2015 Glenair, Inc.

GLENAIR, INC. • 1211 AIR WAY • GLENDALE, CA 91201-2497 • 818-247-6000 • FAX 818-500-9912
www.glenair.com
E-Mail: sales@glenair.com

Downloaded from Arrow.com.

IPT 06 E
Straight Plug Connector
with General Duty Backshell

Polychloroprene Insert	Connector Shell Styles	Shell Size and Insert Arrangement	Alternate Insert Rotation	Mod. Code Options
	06 - Straight Plug		W, X, Y, Z (Omit for Normal)	See Table II

IPT G 06 E 18-11 P Z C XX

SIPT

Silicone Insert

Grounding Fingers (Omit for Standard)

Environmental Class
E - Environmental

Contact Gender
P - Pin
S - Socket

Contact Type
C - Crimp
(Omit for Solder Cup)

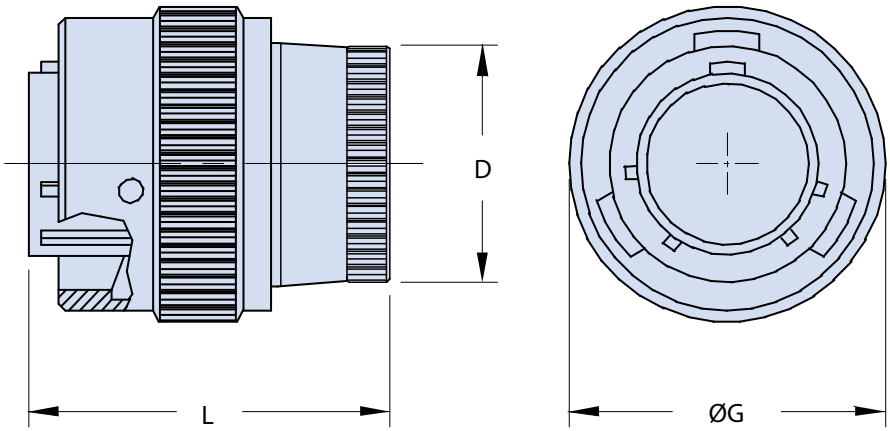

Application Notes

1. Straight plug with grommet and simple backshell for use with open wire bundles.
2. Connector Class "E" (environmental)––Wire sealing grommet supplied.
3. Standard materials configuration consists of aluminum alloy.
4. Standard contact material consists of copper alloy with gold plating over nickel.
5. A broad range of other front and rear connector accessories are available. See our website and/or contact factory for complete information.
6. Standard insert is high insulation synthetic rubber.

© 2015 Glenair, Inc. U.S. CAGE Code 06324 Printed in Italy

Downloaded from Arrow.com.

IPT 06 E
Straight Plug Connector
with General Duty Backshell

TABLE I: DIMENSIONS

Shell size	D Max.	ØG ±0.2	L Max.
8	14.20	18.10	32.15
10	17.40	21.05	32.15
12	20.65	25.15	32.15
14	23.60	28.40	32.15
16	26.85	31.60	32.15
18	29.85	35.00	32.15
20	33.00	37.70	36.50
22	36.30	40.20	36.50
24	39.50	44.00	38.10

TABLE II: MODIFICATION CODES

CONTACT OPTIONS	
Sym	**Description**
B0	Connector Without Contacts (Only for crimp version)
FINISH OPTIONS	
Sym	**Description and RoHS compliant**
F6	Black Electrodeposited Paint
F7	Black Zinc Nickel
F11	Electroless Nickel
MB	Marine Bronze
Omit for standard version (Cadmium Olive Drab Finish)	

© 2015 Glenair, Inc.

GLENAIR, INC. • 1211 AIR WAY • GLENDALE, CA 91201-2497 • 818-247-6000 • FAX 818-500-9912
www.glenair.com
E-Mail: sales@glenair.com

Downloaded from Arrow.com.

IPT 06 E...PG_ _
Straight Plug Connector
with PG Threaded Backshell

Polychloroprene Insert	Connector Shell Styles	Shell Size and Insert Arrangement	Alternate Insert Rotation	Mod. Code Options
	06 - Straight Plug		W, X, Y, Z (Omit for Normal)	See Table II

IPT G 06 E 18-11 P Z C PG16 XX

SIPT

Silicone Insert	Grounding Fingers	Environmental Class	Contact Gender	Contact Type	PG Thread Size
	(Omit for Standard)	*E...PG* - Environmental	*P* - Pin *S* - Socket	*C* - Crimp (Omit for Solder Cup)	See Table I

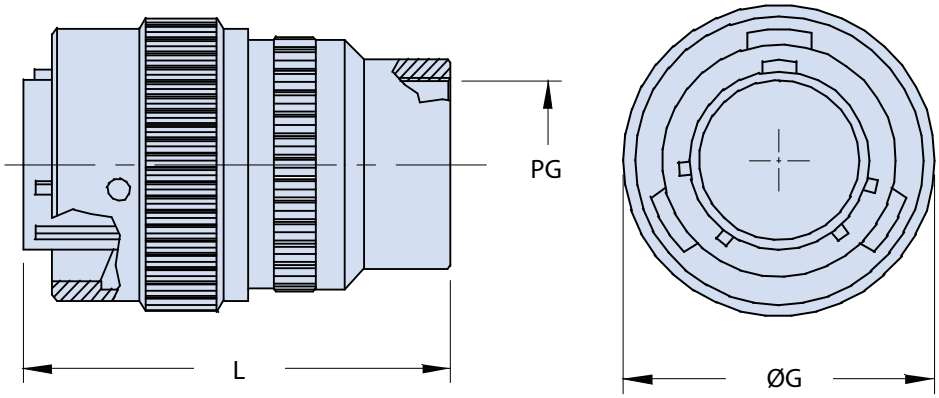

Application Notes

1. Straight plug with backshell for use with PG glands (not included). Other PG sizes and types available upon request.
2. Connector Class "E" (environmental)––Wire sealing grommet supplied.
3. Standard materials configuration consists of aluminum alloy.
4. Standard contact material consists of copper alloy with gold plating over nickel.
5. A broad range of other front and rear connector accessories are available. See our website and/or contact factory for complete information.
6. Standard insert is high insulation synthetic rubber.

© 2015 Glenair, Inc. U.S. CAGE Code 06324 Printed in Italy

Downloaded from Arrow.com.

TABLE I: DIMENSIONS

Shell size	L Max	PG Thread	ØG ±0.2
8	41	7 / 9	18.10
10	41	9	21.05
12	51	11	25.15
14	51	11 / 13.5 / 16	28.40
16	56	11 / 13.5 / 16	31.60
18	56	13.5 / 16	35.00
20	57	13.5 / 16	37.70
22	62	13.5 / 16 / 21	40.20
24	64	13.5 / 16 / 21	44.00

TABLE II: MODIFICATION CODES

CONTACT OPTIONS	
Sym	**Description**
B0	Connector Without Contacts (Only for crimp version)
FINISH OPTIONS	
Sym	**Description and RoHS compliant**
F6	Black Electrodeposited Paint
F7	Black Zinc Nickel
F11	Electroless Nickel
MB	Marine Bronze
Omit for standard version (Cadmium Olive Drab Finish)	

© 2015 Glenair, Inc.

Downloaded from Arrow.com.

IPT 06 E...SR
Straight Plug Connector
with Backshell, Cable Clamp and Bushing

IPT	G	06	E	18 -11	P	Z	C	SR	XX

- **IPT** — **Polychloroprene Insert**
- **SIPT** — **Silicone Insert**
- **G** — **Grounding Fingers** (Omit for Standard)
- **06** — **Connector Shell Styles** *06* - Straight Plug
- **E** — **Environmental Class** *E...SR* - Environmental
- **18 -11** — **Shell Size and Insert Arrangement**
- **P** — **Contact Gender** *P* - Pin, *S* - Socket
- **Z** — **Alternate Insert Rotation** W, X, Y, Z (Omit for Normal)
- **C** — **Contact Type** *C* - Crimp (Omit for Solder Cup)
- **SR** — **Cable Clamp and Bushing**
- **XX** — **Mod. Code Options** See Table II

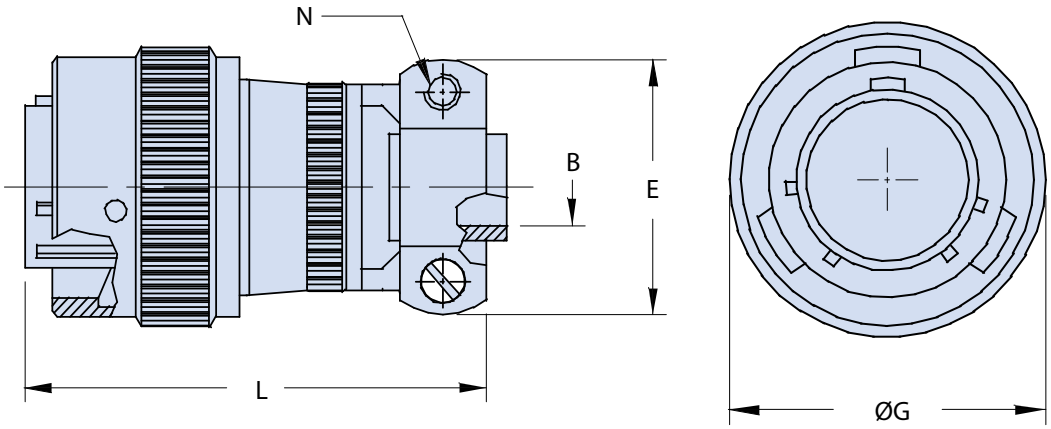

Application Notes

1. Straight plug with cable clamp and bushing for cable protection.
2. Connector Class "E" (environmental)––Wire sealing grommet supplied.
3. Standard materials configuration consists of aluminum alloy.
4. Standard contact material consists of copper alloy with gold plating over nickel.
5. A broad range of other front and rear connector accessories are available. See our website and/or contact factory for complete information.
6. Standard insert is high insulation synthetic rubber.

© 2015 Glenair, Inc. U.S. CAGE Code 06324 Printed in Italy

Downloaded from Arrow.com.

IPT 06 E...SR
Straight Plug Connector
with Backshell, Cable Clamp and Bushing

Glenair®

TABLE I: DIMENSIONS

Shell size	B ±0.25	C min.	E ±0.2	ØG ±0.2	L Max.	N Thread
8	3.2	6.10	19.10	18.10	48.5	6 - 32
10	4.8	7.70	20.70	21.05	48.5	6 - 32
12	7.9	10.90	23.90	25.15	48.5	6 - 32
14	9.5	14.00	27.00	28.40	48.5	6 - 32
16	12.7	15.60	28.60	31.60	52.0	6 - 32
18	15.9	18.80	35.00	35.00	52.0	8 - 32
20	15.9	18.80	35.00	37.70	59.0	8 - 32
22	19.0	23.60	39.75	40.20	59.0	8 - 32
24	20.3	25.15	42.10	44.00	61.0	8 - 32

TABLE II: MODIFICATION CODES

CONTACT OPTIONS	
Sym	**Description**
B0	Connector Without Contacts (Only for crimp version)
FINISH OPTIONS	
Sym	**Description and RoHS compliant**
F6	Black Electrodeposited Paint
F7	Black Zinc Nickel
F11	Electroless Nickel
MB	Marine Bronze
Omit for standard version (Cadmium Olive Drab Finish)	

© 2015 Glenair, Inc.

GLENAIR, INC. • 1211 AIR WAY • GLENDALE, CA 91201-2497 • 818-247-6000 • FAX 818-500-9912
www.glenair.com
E-Mail: sales@glenair.com

Downloaded from Arrow.com.

IPT 06 G
Straight Plug Connector
with Backshell for Heat Shrink Boot

Polychloroprene Insert	Connector Shell Styles		Shell Size and Insert Arrangement	Alternate Insert Rotation		Mod. Code Options
	06 - Straight Plug			W, X, Y, Z (Omit for Normal)		See Table II
IPT	G	06	G	18-11	P	Z	C	XX

SIPT — Silicone Insert

Grounding Fingers (Omit for Standard)

Environmental Class
G - Environmental with Backshell for Heat Shrink Boot

Contact Gender
P - Pin
S - Socket

Contact Type
C - Crimp
(Omit for Solder Cup)

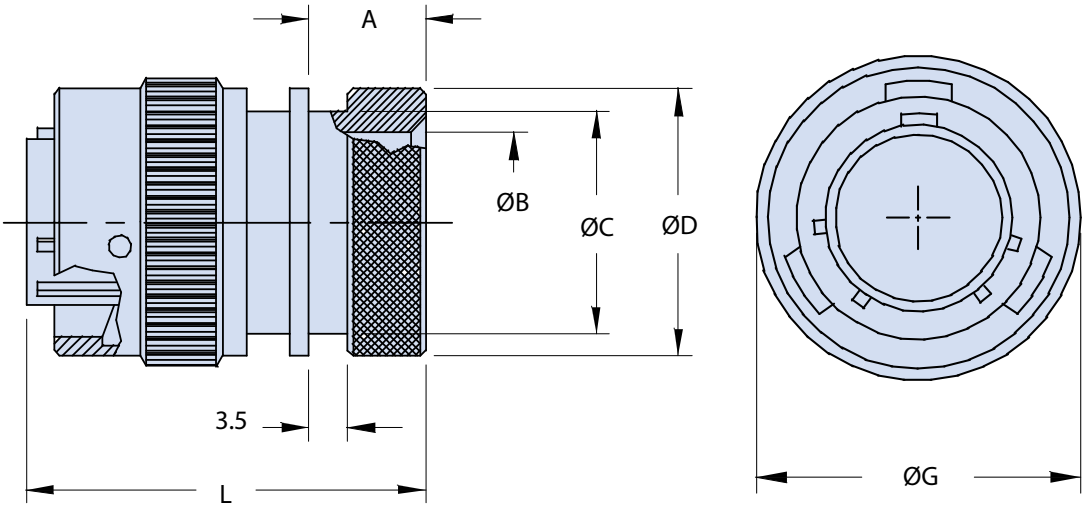

Application Notes

1. Straight plug with backshell suitable for heat shrink boot; Environmental, connector includes wire sealing grommet.
2. Standard materials configuration consists of aluminum alloy.
3. Connector/Backshell Class "G" (environmental)--Wire sealing grommet supplied.
4. Standard contact material consists of copper alloy with gold plating over nickel.
5. A broad range of other front and rear connector accessories are available. See our website and/or contact factory for complete information.
6. Standard insert is high insulation synthetic rubber.

© 2015 Glenair, Inc. U.S. CAGE Code 06324 Printed in Italy

Downloaded from Arrow.com.

IPT 06 G
Straight Plug Connector
with Backshell for Heat Shrink Boot

TABLE I: DIMENSIONS

Shell size	A ±0,1	ØB +0.1 -0	ØC +0 -0.1	ØD +0 -0.3	L Max.	ØG ±0.2
8	12.2	8.20	13.0	15.5	43.5	18.10
10	12.2	11.40	15.8	18.3	42.0	21.05
12	12.2	14.55	21.0	23.6	42.0	25.15
14	12.2	17.50	21.8	24.4	42.0	28.40
16	14.5	20.60	25.9	29.7	44.0	31.60
18	14.5	23.15	28.2	31.9	44.5	35.00
20	15.8	26.50	32.2	36.0	47.0	37.70
22	15.8	29.60	34.5	38.4	47.0	40.20
24	14.9	32.80	37.6	41.5	47.0	44.00

TABLE II: MODIFICATION CODES

CONTACT OPTIONS	
Sym	**Description**
B0	Connector Without Contacts (Only for crimp version)
FINISH OPTIONS	
Sym	**Description and RoHS compliant**
F6	Black Electrodeposited Paint
F7	Black Zinc Nickel
F11	Electroless Nickel
MB	Marine Bronze
Omit for standard version (Cadmium Olive Drab Finish)	

© 2015 Glenair, Inc.

GLENAIR, INC. • 1211 AIR WAY • GLENDALE, CA 91201-2497 • 818-247-6000 • FAX 818-500-9912
www.glenair.com
E-Mail: sales@glenair.com

Downloaded from Arrow.com.

IPT 06 J
Straight Plug Connector
with Long Backshell, Metal Sleeve, Cable Sealing Gland, and Cable Clamp

Polychloroprene Insert	Connector Shell Styles	Shell Size and Insert Arrangement	Alternate Insert Rotation	Mod. Code Options
	06 - Straight Plug		W, X, Y, Z (Omit for Normal)	See Table II

IPT G 06 J 18-11 P Z C XX

SIPT

Grounding Fingers (Omit for Standard)

Environmental Class
J - Environmental, includes Long Backshell, Metal Sleeve and Overall Cable Sealing Gland

Contact Gender
P - Pin
S - Socket

Contact Type
C - Crimp
(Omit for Solder Cup)

Silicone Insert

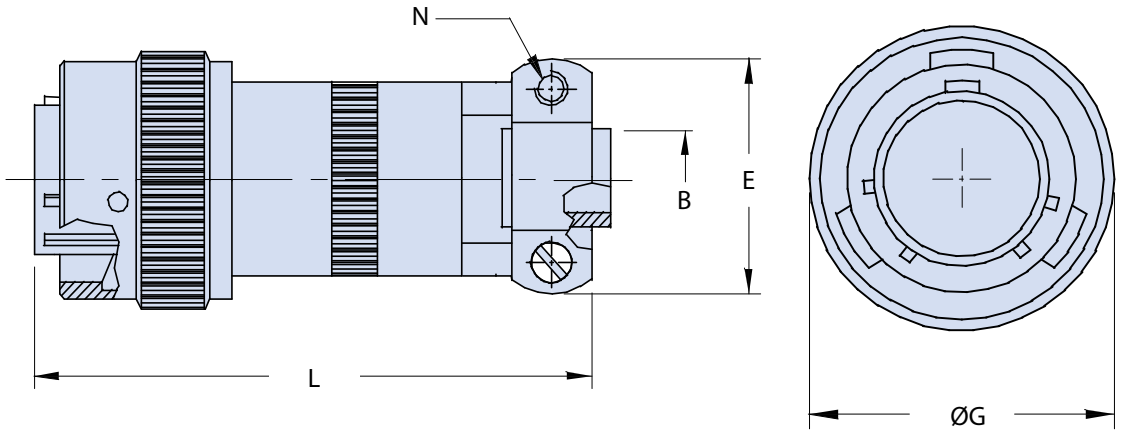

Application Notes

1. Straight plug with long backshell, incorporated metal sleeve, gland seal and cable clamp.
2. Connector/Backshell Class "J" (environmental)––No grommet supplied.
3. Standard materials configuration consists of aluminum alloy.
4. Standard contact material consists of copper alloy with gold plating over nickel.
5. A broad range of other front and rear connector accessories are available. See our website and/or contact factory for complete information.
6. Standard insert is high insulation synthetic rubber.

© 2015 Glenair, Inc. U.S. CAGE Code 06324 Printed in Italy

Downloaded from Arrow.com.

IPT 06 J
Straight Plug Connector
with Long Backshell, Metal Sleeve, Cable Sealing Gland, and Cable Clamp

TABLE I: DIMENSIONS

Shell size	B ±0.25	E ±0.2	ØG ±0.2	L Max.	N Thread
8	3.2	19.10	18.10	56.0	6 - 32
10	4.8	20.70	21.05	56.0	6 - 32
12	7.9	23.90	25.15	59.0	6 - 32
14	9.5	27.00	28.40	66.0	6 - 32
16	12.7	28.60	31.60	72.0	6 - 32
18	15.9	35.00	35.00	79.0	8 - 32
20	15.9	35.00	37.70	88.5	8 - 32
22	19.0	39.75	40.20	95.5	8 - 32
24	20.3	42.10	44.00	100.0	8 - 32

TABLE II: MODIFICATION CODES

CONTACT OPTIONS	
Sym	**Description**
B0	Connector Without Contacts (Only for crimp version)
FINISH OPTIONS	
Sym	**Description and RoHS compliant**
F6	Black Electrodeposited Paint
F7	Black Zinc Nickel
F11	Electroless Nickel
MB	Marine Bronze
Omit for standard version (Cadmium Olive Drab Finish)	

© 2015 Glenair, Inc.

GLENAIR, INC. • 1211 AIR WAY • GLENDALE, CA 91201-2497 • 818-247-6000 • FAX 818-500-9912
www.glenair.com
E-Mail: sales@glenair.com

Downloaded from Arrow.com.

IPT 06 W
Straight Plug Connector
with Long Backshell and Cable Sealing Gland

IPT	G	06	W	18-11	P	Z	C	XX

Polychloroprene Insert — IPT

Silicone Insert — SIPT

Grounding Fingers (Omit for Standard) — G

Connector Shell Styles
06 - Straight Plug — 06

Environmental Class
W- Environmental; Backshell includes an Overall Cable Sealing Gland — W

Shell Size and Insert Arrangement — 18-11

Contact Gender
P - Pin
S - Socket — P

Alternate Insert Rotation
W, X, Y, Z
(Omit for Normal) — Z

Contact Type
C - Crimp
(Omit for Solder Cup) — C

Mod. Code Options
See Table II — XX

C

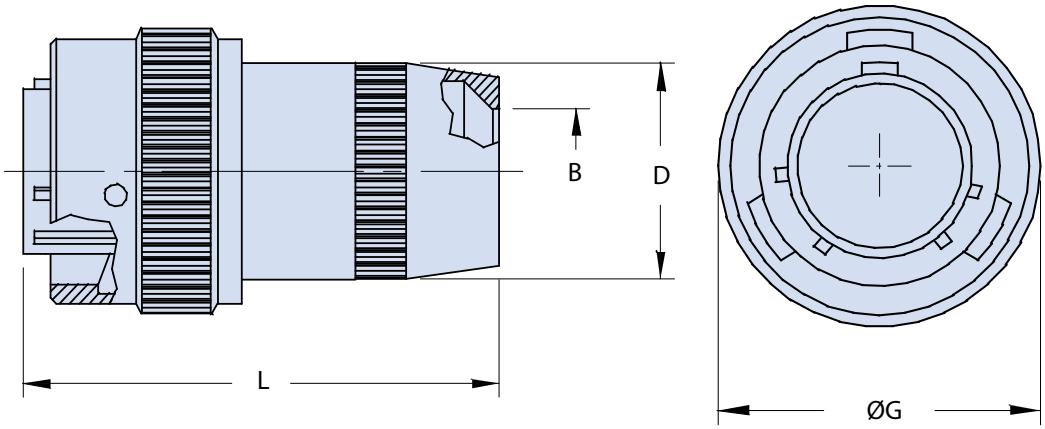

Application Notes

1. Straight plug with long backshell, incorporated metal sleeve and gland seal. No cable clamp provided.
2. Connector/Backshell Class "W" (environmental)––No grommet supplied.
3. Standard materials configuration consists of aluminum alloy.
4. Standard contact material consists of copper alloy with gold plating over nickel.
5. A broad range of other front and rear connector accessories are available. See our website and/or contact factory for complete information.
6. Standard insert is high insulation synthetic rubber.

© 2015 Glenair, Inc. U.S. CAGE Code 06324 Printed in Italy

Downloaded from Arrow.com.

IPT 06 W
Straight Plug Connector
with Long Backshell and Cable Sealing Gland

TABLE I: DIMENSIONS

Shell size	B min.	B Max.	D Max.	ØG ±0.2	L Max.
8	4.25	6.10	13.90	18.10	47.5
10	5.20	7.90	17.15	21.05	47.5
12	8.60	11.20	20.60	25.15	47.5
14	10.55	13.70	23.90	28.40	55.5
16	14.00	15.65	27.50	31.60	61.0
18	15.25	17.10	30.90	35.00	68.0
20	16.10	19.00	34.10	37.70	78.5
22	17.00	21.50	37.50	40.20	83.0
24	18.80	22.70	40.30	44.00	90.0

TABLE II: MODIFICATION CODES

CONTACT OPTIONS	
Sym	**Description**
B0	Connector Without Contacts (Only for crimp version)
FINISH OPTIONS	
Sym	**Description and RoHS compliant**
F6	Black Electrodeposited Paint
F7	Black Zinc Nickel
F11	Electroless Nickel
MB	Marine Bronze
Omit for standard version (Cadmium Olive Drab Finish)	

© 2015 Glenair, Inc.

GLENAIR, INC. • 1211 AIR WAY • GLENDALE, CA 91201-2497 • 818-247-6000 • FAX 818-500-9912
www.glenair.com
E-Mail: sales@glenair.com

Downloaded from Arrow.com.

IPT 06 M
Straight Plug Connector
with Backshell Suitable for EMI Shield Termination and Heat Shrink Boot

IPT	G	06	M	18-11	P	Z	C	XX

Polychloroprene Insert — IPT

Silicone Insert — SIPT

Grounding Fingers (Omit for Standard) — G

Connector Shell Styles
06 - Straight Plug — 06

Environmental Class
M- Environmental Plug with Backshell for EMI Shield Termination and Heat Shrink Boot — M

Shell Size and Insert Arrangement — 18-11

Contact Gender
P - Pin
S - Socket — P

Alternate Insert Rotation
W, X, Y, Z
(Omit for Normal) — Z

Contact Type
C - Crimp
(Omit for Solder Cup) — C

Mod. Code Options
See Table II — XX

C

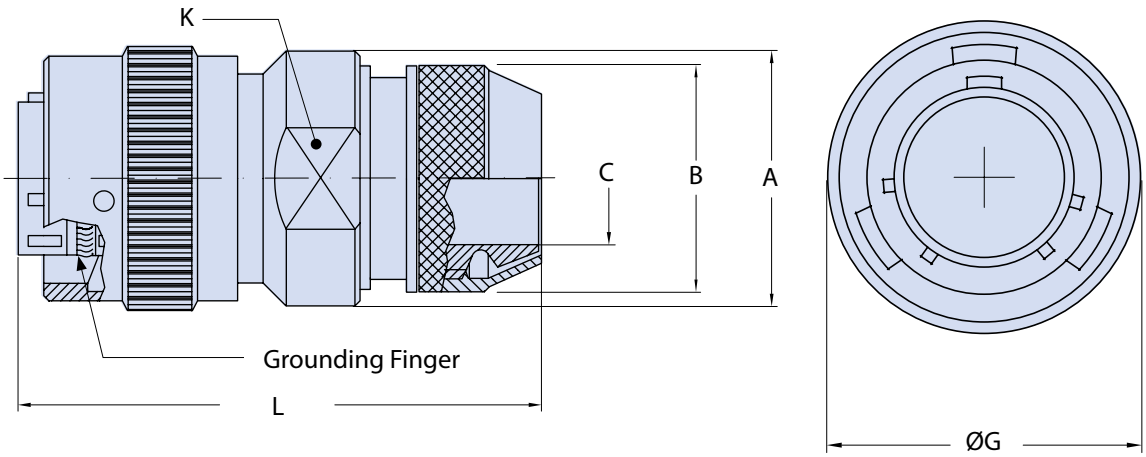

Application Notes

1. Straight plug with backshell for heat shrink boot, and/or terminating EMI shielded cable.
2. Standard materials configuration consists of aluminum alloy.
3. Connector/Backshell Class "M" (environmental)--Wire sealing grommet supplied.
4. Standard contact material consists of copper alloy with gold plating over nickel.
5. A broad range of other front and rear connector accessories are available. See our website and/or contact factory for complete information.
6. Standard insert is high insulation synthetic rubber.

© 2015 Glenair, Inc. U.S. CAGE Code 06324 Printed in Italy

Downloaded from Arrow.com.

IPT 06 M
Straight Plug Connector
with Backshell Suitable for
EMI Shield Termination and Heat Shrink Boot

TABLE I: DIMENSIONS

Shell size	A Max.	B +0.5 -0	C min.	K Key	L Max	ØG ±0.2
8	20	16	6.6	18	55	18.10
10	23	18	9.2	21	55	21.05
12	27	22	12.2	24	55	25.15
14	30	25	15.2	28	56	28.40
16	33	28	18.3	31	56	31.60
18	36	32	20.0	34	56	35.00
20	40	34	23.0	37	60	37.70
22	43	38	26.0	41	60	40.20
24	46	41	28.8	44	62	44.00

TABLE II: MODIFICATION CODES

CONTACT OPTIONS	
Sym	**Description**
B0	Connector Without Contacts (Only for crimp version)
FINISH OPTIONS	
Sym	**Description and RoHS compliant**
F7	Black Zinc Nickel
F11	Electroless Nickel
MB	Marine Bronze
Omit for standard version (Cadmium Olive Drab Finish)	

© 2015 Glenair, Inc.

GLENAIR, INC. • 1211 AIR WAY • GLENDALE, CA 91201-2497 • 818-247-6000 • FAX 818-500-9912
www.glenair.com
E-Mail: sales@glenair.com

Downloaded from Arrow.com.

IPT 07 A
Rear Box Mount Jam Nut
Receptacle Connector

Polychloroprene Insert	Connector Shell Styles		Shell Size and Insert Arrangement		Alternate Insert Rotation		Mod. Code Options
	07 - Rear Panel Mount Jam Nut Receptacle				W, X, Y, Z (Omit for Normal)		See Table II
IPT	**07**	**A**	**18-11**	**P**	**Z**	**C**	**XX**
SIPT		Environmental Class: *A* - Non Environmental		Contact Gender: *P* - Pin, *S* - Socket		Contact Type: *C* - Crimp (Omit for Solder Cup)	
Silicone Insert							

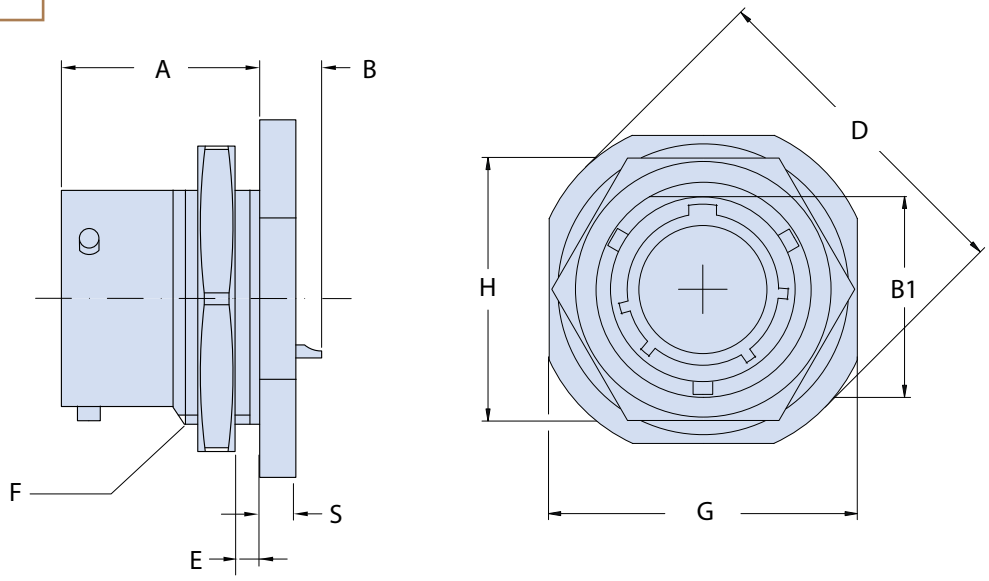

Application Notes

1. Real box mount jam nut receptacle; No accessory threads.
2. Connector Class "A" (non-environmental).
3. Standard materials configuration consists of aluminum alloy with stainless steel coupling pins.
4. Standard contact material consists of copper alloy with gold plating over nickel.
5. Standard insert is high insulation synthetic rubber.

© 2015 Glenair, Inc. U.S. CAGE Code 06324 Printed in Italy

Downloaded from Arrow.com.

IPT 07 A
Rear Box Mount Jam Nut
Receptacle Connector

TABLE I: DIMENSIONS

Shell size	A ±0.4	B ±1	B1 +0 -0.25	D +0 -0.8	E min.	E Max.	F Thread in inches	G Max.	H ±0.43	S ±0.5
8	17.70	4.8	13.46	27.3	1.6	3.2	.5625 - 24 UNEF	24.3	19.05	3.0
10	17.70	4.8	16.46	30.5	1.6	3.2	.6875 - 24 UNEF	27.4	22.23	3.0
12	17.70	4.8	20.78	35.3	1.6	3.2	.8750 - 20 UNEF	32.2	26.97	3.0
14	17.70	4.8	23.93	38.5	1.6	3.2	1.0000 - 20 UNEF	35.4	30.18	3.0
16	17.70	4.8	27.08	41.6	1.6	3.2	1.1250 - 18 UNEF	38.6	33.32	3.0
18	17.70	4.8	30.25	44.8	1.6	3.2	1.2500 - 18 UNEF	41.7	36.53	3.0
20	22.45	5.6	33.43	49.6	1.6	6.3	1.3750 - 18 UNEF	46.5	39.67	3.8
22	22.45	5.6	36.60	52.7	1.6	6.3	1.5000 - 18 UNEF	49.7	42.88	3.8
24	23.30	4.8	39.78	55.9	1.6	6.3	1.6250 - 18 UNEF	52.8	46.02	3.8

TABLE II: MODIFICATION CODES

CONTACT OPTIONS	
Sym	**Description**
B0	Connector Without Contacts (Only for crimp version)
FINISH OPTIONS	
Sym	**Description and RoHS compliant**
F6	Black Electrodeposited Paint
F7	Black Zinc Nickel
F11	Electroless Nickel
MB	Marine Bronze
Omit for standard version (Cadmium Olive Drab Finish)	

© 2015 Glenair, Inc.

GLENAIR, INC. • 1211 AIR WAY • GLENDALE, CA 91201-2497 • 818-247-6000 • FAX 818-500-9912
www.glenair.com
E-Mail: sales@glenair.com

Downloaded from Arrow.com.

IPT 07 E
Rear Panel Mount Jam Nut
Receptacle Connector with Backshell

IPT	07	E	18-11	P	Z	C	XX

Polychloroprene Insert

Silicone Insert

Connector Shell Styles
07 - Rear Panel Mount Jam Nut Receptacle

Environmental Class
E - Environmental

Shell Size and Insert Arrangement

Contact Gender
P - Pin
S - Socket

Alternate Insert Rotation
W, X, Y, Z
(Omit for Normal)

Contact Type
C - Crimp
(Omit for Solder Cup)

Mod. Code Options
See Table II

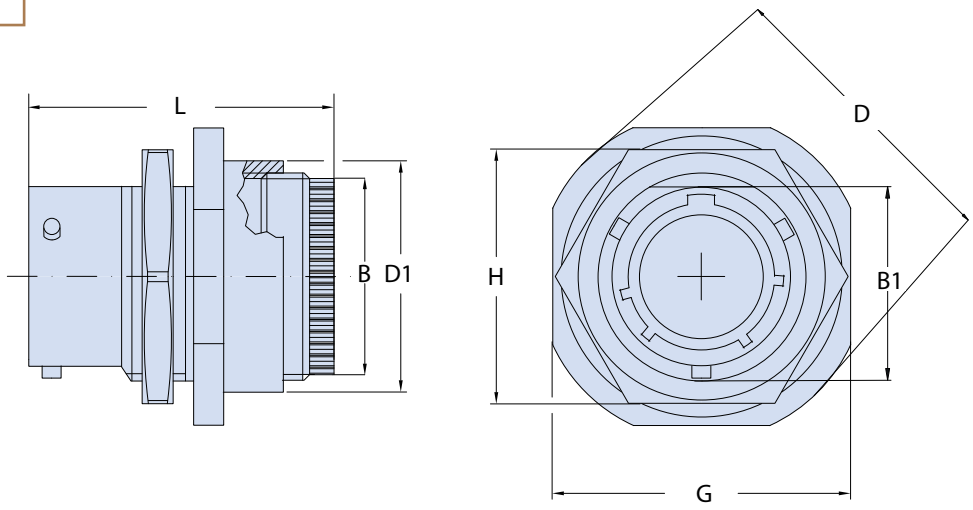

Application Notes

1. Rear panel mount jam nut receptacle connector with simple backshell for open wire bundles.
2. Connector Class "E" (environmental)––Wire sealing grommet supplied.
3. Standard materials configuration consists of aluminum alloy with stainless steel coupling pins.
4. Standard contact material consists of copper alloy with gold plating over nickel.
5. A broad range of other front and rear connector accessories are available. See our website and/or contact factory for complete information.
6. Standard insert is high insulation synthetic rubber.

© 2015 Glenair, Inc. U.S. CAGE Code 06324 Printed in Italy

Downloaded from Arrow.com.

IPT 07 E
Rear Panel Mount Jam Nut
Receptacle Connector with Backshell

TABLE I: DIMENSIONS

Shell size	B Max.	B1 +0 -0.25	D +0 -0.8	G ±0.4	H ±0.4	L Max.	D1 min.
8	13.5	13.46	27.3	23.8	19	39.3	19.0
10	16.5	16.46	30.5	27.0	22	39.3	22.2
12	19.5	20.78	35.3	31.7	27	39.3	25.5
14	22.5	23.93	38.5	34.9	30	39.3	28.5
16	25.5	27.08	41.6	38.1	33	39.3	31.7
18	29.0	30.25	44.8	41.3	36	39.3	34.9
20	31.8	33.43	49.6	46.0	40	43.4	38.8
22	35.0	36.60	52.7	49.2	43	43.4	42.0
24	38.0	39.78	55.9	52.4	46	43.4	45.2

TABLE II: MODIFICATION CODES

CONTACT OPTIONS	
Sym	**Description**
B0	Connector Without Contacts (Only for crimp version)
FINISH OPTIONS	
Sym	**Description and RoHS compliant**
F6	Black Electrodeposited Paint
F7	Black Zinc Nickel
F11	Electroless Nickel
MB	Marine Bronze
Omit for standard version (Cadmium Olive Drab Finish)	

© 2015 Glenair, Inc.

GLENAIR, INC. • 1211 AIR WAY • GLENDALE, CA 91201-2497 • 818-247-6000 • FAX 818-500-9912
www.glenair.com
E-Mail: sales@glenair.com

Downloaded from Arrow.com.

IPT 07 E...SR
Rear Panel Mount Jam Nut
Receptacle Connector and Backshell with Cable Clamp and Bushing

Polychloroprene Insert	Environmental Class	Shell Size and Insert Arrangement	Alternate Insert Rotation		Cable Clamp with Bushing			
IPT	07	E	18-11	P	Z	C	SR	XX
SIPT								

Silicone Insert

Connector Shell Styles
07 - Rear Panel Mount Jam Nut Receptacle

Contact Gender
P - Pin
S - Socket

Alternate Insert Rotation
W, X, Y, Z
(Omit for Normal)

Contact Type
C - Crimp
(Omit for Solder Cup)

Mod. Code Options
See Table II

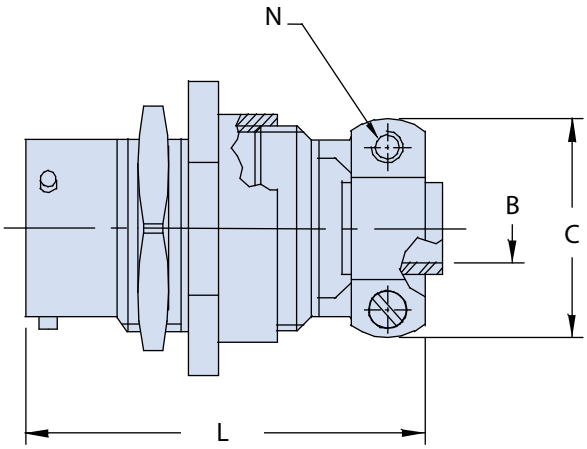

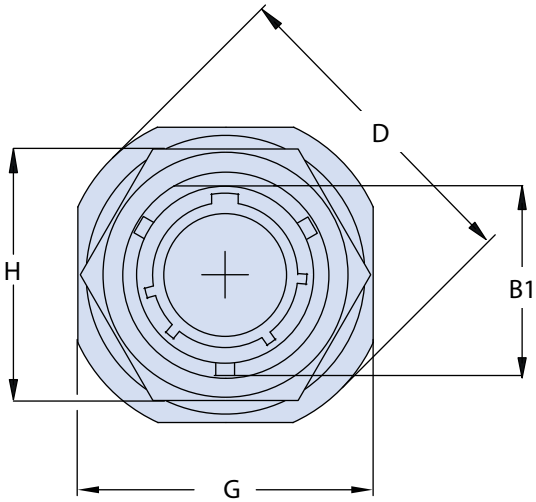

Application Notes

1. Rear panel mount jam nut receptacle connector with backshell cable clamp and bushing for cable protection.
2. Connector Class "E" (environmental)––Wire sealing grommet supplied.
3. Standard materials configuration consists of aluminum alloy with stainless steel coupling pins.
4. Standard contact material consists of copper alloy with gold plating over nickel.
5. A broad range of other front and rear connector accessories are available. See our website and/or contact factory for complete information.
6. Standard insert is high insulation synthetic rubber.

© 2015 Glenair, Inc. U.S. CAGE Code 06324 Printed in Italy

Downloaded from Arrow.com.

IPT 07 E...SR
Rear Panel Mount Jam Nut
Receptacle Connector and Backshell with Cable Clamp and Bushing

TABLE I: DIMENSIONS

Shell size	B ±0.25	B1 +0 -0.25	C ±0.2	D +0 -0.8	G ±0.4	H ±0.4	L Max	N Thread
8	3.2	13.46	19.10	27.3	23.8	19	55	6 - 32
10	4.8	16.46	20.70	30.5	27.0	22	58	6 - 32
12	7.9	20.78	23.90	35.3	31.7	27	58	6 - 32
14	9.5	23.93	27.00	38.5	34.9	30	58	6 - 32
16	12.7	27.08	28.60	41.6	38.1	33	58	6 - 32
18	15.9	30.25	35.00	44.8	41.3	36	63	8 - 32
20	15.9	33.43	35.00	49.6	46.0	40	65	8 - 32
22	19.0	36.60	39.75	52.7	49.2	43	65	8 - 32
24	20.3	39.78	42.10	55.9	52.4	46	65	8 - 32

TABLE II: MODIFICATION CODES

CONTACT OPTIONS	
Sym	**Description**
B0	Connector Without Contacts (Only for crimp version)
FINISH OPTIONS	
Sym	**Description and RoHS compliant**
F6	Black Electrodeposited Paint
F7	Black Zinc Nickel
F11	Electroless Nickel
MB	Marine Bronze
Omit for standard version (Cadmium Olive Drab Finish)	

© 2015 Glenair, Inc.

GLENAIR, INC. • 1211 AIR WAY • GLENDALE, CA 91201-2497 • 818-247-6000 • FAX 818-500-9912
www.glenair.com
E-Mail: sales@glenair.com

Downloaded from Arrow.com.

IPT 07 Y
Rear Box Mount Jam Nut Receptacle
with Printed Circuit Board Contacts

Polychloroprene Insert	Environmental Class	Shell Size and Insert Arrangement	Alternate Insert Rotation	Mod. Code Options
	Y - Print Circuit Board Contacts		W, X, Y, Z (Omit for Normal)	See Table II

IPT 07 Y 18-11 P Z C XX

SIPT

Silicone Insert

Connector Shell Styles
07 - Rear Panel Mount Jam Nut Receptacle

Contact Gender
P - Pin
S - Socket

Contact Type
C - Crimp
(Omit for Solder Cup)

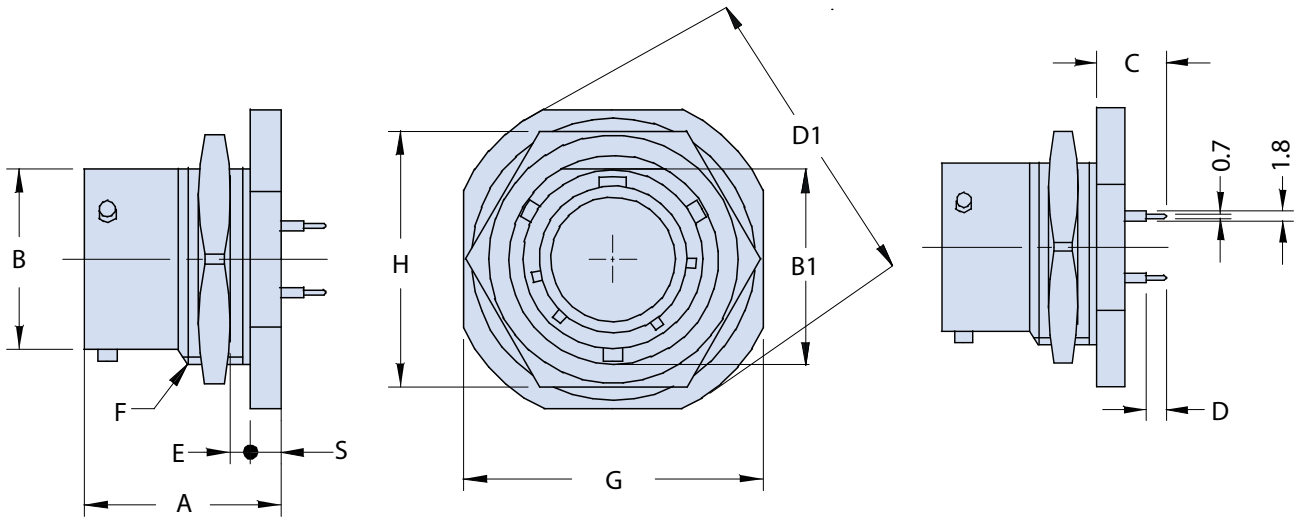

Application Notes

1. Rear box mount jam nut receptacle connector with printed circuit board contacts.
2. Connector Style "Y" –– Includes PCB tails. Contact factory for custom tail lengths.
3. Standard materials configuration consists of aluminum alloy with stainless steel coupling pins.
4. Standard contact material consists of copper alloy with gold plating over nickel.
5. Standard insert is high insulation synthetic rubber.

© 2015 Glenair, Inc. U.S. CAGE Code 06324 Printed in Italy

Downloaded from Arrow.com.

IPT 07 Y
Rear Box Mount Jam Nut Receptacle
with Printed Circuit Board Contacts

Glenair®

TABLE I: DIMENSIONS

Shell size	A ±0.2	B +0 -0.1	B1 +0 -0.25	D1 +0 -0.8	E min.	E Max.	F Thread in inches	G ±0.4	H ±0.4	S ±0.4
8	20.85	12.01	13.46	27.3	1.6	3.2	.5625 - 24 UNEF	23.8	19	3.2
10	20.85	14.98	16.46	30.5	1.6	3.2	.6875 - 24 UNEF	27.0	22	3.2
12	20.85	19.05	20.78	35.3	1.6	3.2	.8750 - 20 UNEF	31.7	27	3.2
14	20.85	22.22	23.93	38.5	1.6	3.2	1.0000 - 20 UNEF	34.9	30	3.2
16	20.85	25.40	27.08	41.6	1.6	3.2	1.1250 - 18 UNEF	38.1	33	3.2
18	20.85	28.57	30.25	44.8	1.6	3.2	1.2500 - 18 UNEF	41.3	36	3.2
20	26.40	31.75	33.43	49.6	1.6	6.3	1.3750 - 18 UNEF	46.0	40	4.0
22	26.40	34.92	36.60	52.7	1.6	6.3	1.5000 - 18 UNEF	49.2	43	4.0
24	26.40	38.10	39.78	55.9	1.6	6.3	1.6250 - 18 UNEF	52.4	46	4.0

TABLE I: DIMENSIONS (CONTINUED FROM ABOVE)

Shell size	Y		Y1		Y2		YS		YL		YM		YK	
	C	D	C	D	C	D	C	D	C	D	C	D	C	D
	±0.4	±0.2	±0.4	±0.2	±0.4	±0.2	±0.4	±0.2	±0.4	±0.2	±0.4	±0.2	±0.4	±0.2
8	9.4	3.6	8.9	3.2	9.4	4.8	7.8	3.2	12.5	6.0	14.0	7.2	12.1	7.1
10	9.4	3.6	8.9	3.2	9.4	4.8	7.8	3.2	12.5	6.0	14.0	7.2	12.1	7.1
12	9.4	3.6	8.9	3.2	9.4	4.8	7.8	3.2	12.5	6.0	14.0	7.2	12.1	7.1
14	9.4	3.6	8.9	3.2	9.4	4.8	7.8	3.2	12.5	6.0	14.0	7.2	12.1	7.1
16	9.4	3.6	8.9	3.2	9.4	4.8	7.8	3.2	12.5	6.0	14.0	7.2	12.1	7.1
18	9.4	3.6	8.9	3.2	9.4	4.8	7.8	3.2	12.5	6.0	14.0	7.2	12.1	7.1
20	9.6	3.6	8.7	3.2	11.35	4.8	9.3	3.2	11.1	6.0	14.65	7.2	11.9	7.1
22	9.6	3.6	8.7	3.2	11.35	4.8	9.3	3.2	11.1	6.0	14.65	7.2	11.9	7.1
24	8.8	3.6	8.5	3.2	11.00	4.8	8.5	3.2	10.3	6.0	14.3	7.2	11.2	7.1

TABLE II: MODIFICATION CODES

FINISH OPTIONS	
Sym	**Description and RoHS compliant**
F6	Black Electrodeposited Paint
F7	Black Zinc Nickel
F11	Electroless Nickel
MB	Marine Bronze
Omit for standard version (Cadmium Olive Drab Finish)	

© 2015 Glenair, Inc.

GLENAIR, INC. • 1211 AIR WAY • GLENDALE, CA 91201-2497 • 818-247-6000 • FAX 818-500-9912
www.glenair.com
E-Mail: sales@glenair.com

Downloaded from Arrow.com.

IPT 071 YK
Rear Box Mount Jam Nut Receptacle
with Standoff and Printed Circuit Board Contacts

Polychloroprene Insert	Environmental Class		Shell Size and Insert Arrangement	Alternate Insert Rotation		
	YK - Print Circuit Board Contacts			W, X, Y, Z (Omit for Normal)		
IPT	**071**	**YK**	**18-11**	**P**	**Z**	**XX**
SIPT	Connector Shell Styles *071* - Rear Box Mount Jam Nut Receptacle			Contact Gender *P* - Pin *S* - Socket		Mod. Code Options See Table II
Silicone Insert						

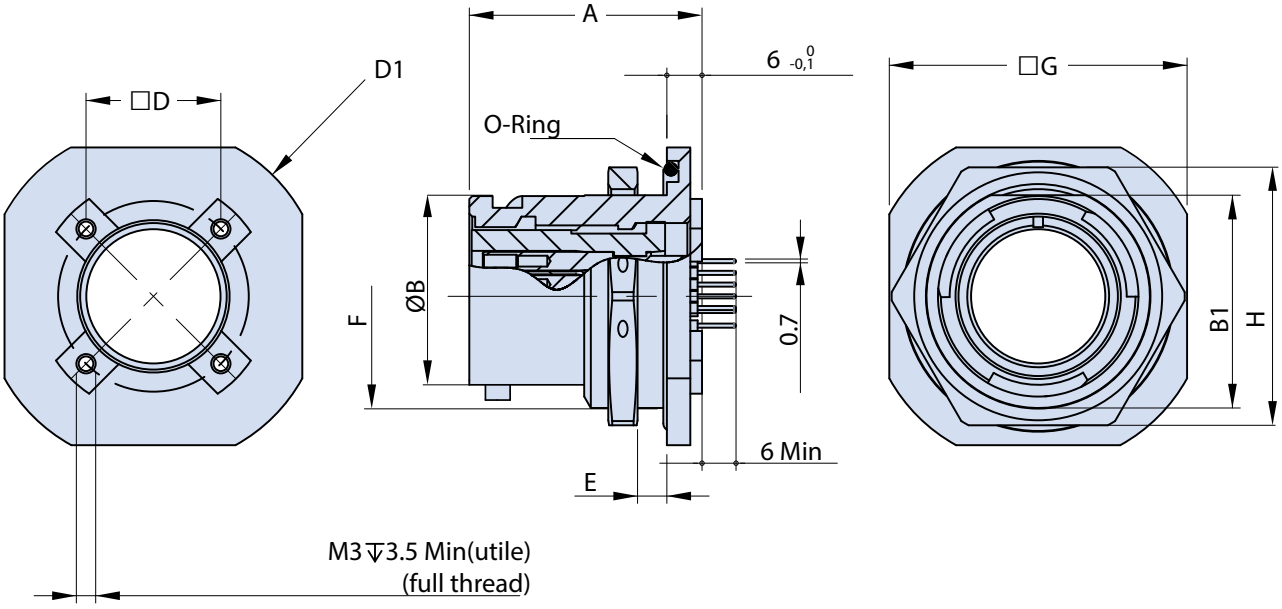

Application Notes

1. Rear box mount jam nut receptacle connector with standoff and printed circuit board contacts.
2. Connector Style "YK –– Includes PCB tails.
3. Standard materials configuration consists of aluminum alloy with stainless steel coupling pins.
4. Standard contact material consists of copper alloy with gold plating over nickel.
5. Standard insert is high insulation synthetic rubber.

© 2015 Glenair, Inc. U.S. CAGE Code 06324 Printed in Italy

Downloaded from Arrow.com.

IPT 071 YK
Rear Box Mount Jam Nut Receptacle
with Standoff and Printed Circuit Board Contacts

TABLE I: DIMENSIONS

Shell size	A ±0.2	B +0 -0.1	F Thread in inches	D ±0.2	E min.	E Max.	G ±0.4	B1 +0 -0.25	D1 +0 -0.8	H ±0.4
10	23.7	14.98	.6875 - 24 UNEF	11.5	1.6	3.2	27.0	16.46	30.5	22
12	23.7	19.05	.8750 - 20 UNEF	14.0	1.6	3.2	31.7	20.78	35.3	27
14	23.7	22.22	1.0000 - 20 UNEF	16.3	1.6	3.2	34.9	23.93	38.5	30
16	23.7	25.40	1.1250 - 18 UNEF	18.7	1.6	3.2	38.1	27.08	41.6	33
18	23.7	28.57	1.2500 - 18 UNEF	21.0	1.6	3.2	41.3	30.25	44.8	36
20	28.4	31.75	1.3750 - 18 UNEF	23.0	1.6	6.3	46.0	33.43	49.6	40
22	28.7	34.92	1.5000 - 18 UNEF	25.0	1.6	6.3	49.2	36.60	52.7	43
24	29.3	38.10	1.6250 - 18 UNEF	27.0	1.6	6.3	52.4	39.78	55.9	46

TABLE II: MODIFICATION CODES

FINISH OPTIONS	
Sym	**Description and RoHS compliant**
F6	Black Electrodeposited Paint
F7	Black Zinc Nickel
F11	Electroless Nickel
MB	Marine Bronze
Omit for standard version (Cadmium Olive Drab Finish)	

© 2015 Glenair, Inc.

GLENAIR, INC. • 1211 AIR WAY • GLENDALE, CA 91201-2497 • 818-247-6000 • FAX 818-500-9912
www.glenair.com
E-Mail: sales@glenair.com

Downloaded from Arrow.com.

IPT 08 AM
Plug Connector
with 90° Backshell Suitable for MS3057 Cable Clamp

IPT	G	08	AM	18-11	P	Z	C	XX

- **IPT** — **Polychloroprene Insert**
- **SIPT** — **Silicone Insert**
- **G** — **Grounding Fingers** (Omit for Standard)
- **08** — **Connector Shell Styles** *08* - 90° Backshell
- **AM** — **Environmental Class** *AM* - Non Environmental
- **18-11** — **Shell Size and Insert Arrangement**
- **P** — **Contact Gender** *P* - Pin; *S* - Socket
- **Z** — **Alternate Insert Rotation** W, X, Y, Z (Omit for Normal)
- **C** — **Contact Type** *C* - Crimp (Omit for Solder Cup)
- **XX** — **Mod. Code Options** See Table II

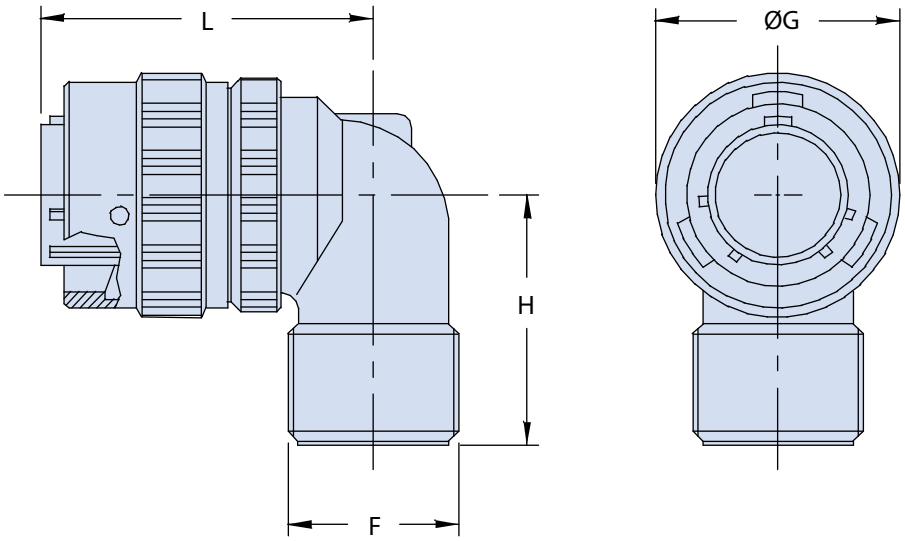

Application Notes

1. Plug with 90° backshell for cable clamp MS3057-A/B/C (not included).
2. Connector/Backshell Class "AM" (non-environmental)––no grommet supplied.
3. Standard materials configuration consists of aluminum alloy.
4. Standard contact material consists of copper alloy with gold plating over nickel.
5. A broad range of other front and rear connector accessories are available. See our website and/or contact factory for complete information.
6. Standard insert is high insulation synthetic rubber.

© 2015 Glenair, Inc. U.S. CAGE Code 06324 Printed in Italy

Downloaded from Arrow.com.

IPT 08 AM
Plug Connector
with 90° Backshell Suitable for MS3057 Cable Clamp

TABLE I: DIMENSIONS

Shell size	F Thread in inches	ØG ±0.2	H Max.	L Max.
8	.5000 - 28 UNEF	18.10	20.0	36.0
10	.6250 - 24 UNEF	21.05	26.0	36.0
12	.7500 - 20 UNEF	25.15	27.5	38.0
14	.8750 - 20 UNEF	28.40	28.0	41.5
16	1.0000 - 20 UNEF	31.60	31.0	43.0
18	1.1875 - 18 UNEF	35.00	33.0	48.0
20	1.1875 - 18 UNEF	37.70	33.0	52.0
22	1.4375 - 18 UNEF	40.20	38.0	56.0
24	1.4375 - 18 UNEF	44.00	39.0	57.0

TABLE II: MODIFICATION CODES

CONTACT OPTIONS	
Sym	**Description**
B0	Connector Without Contacts (Only for crimp version)
FINISH OPTIONS	
Sym	**Description and RoHS compliant**
F6	Black Electrodeposited Paint
F7	Black Zinc Nickel
F11	Electroless Nickel
MB	Marine Bronze
Omit for standard version (Cadmium Olive Drab Finish)	

© 2015 Glenair, Inc.

GLENAIR, INC. • 1211 AIR WAY • GLENDALE, CA 91201-2497 • 818-247-6000 • FAX 818-500-9912
www.glenair.com
E-Mail: sales@glenair.com

Downloaded from Arrow.com.

IPT 08 A...PHM_ _
Plug Connector with 90° PHM Backshell
and Sleeves to Accommodate Various Cable Sizes

IPT	G	08	A	18-11	P	Z	C	PHM18	XX

- **IPT** — **Polychloroprene Insert**
- **SIPT** — **Silicone Insert**
- **G** — **Grounding Fingers** (Omit for Standard)
- **08** — **Connector Shell Styles** *08* - 90° Backshell
- **A** — **Environmental Class** *A...PHM* - Non Environmental
- **18-11** — **Shell Size and Insert Arrangement**
- **P** — **Contact Gender** *P* - Pin, *S* - Socket
- **Z** — **Alternate Insert Rotation** W, X, Y, Z (Omit for Normal)
- **C** — **Contact Type** *C* - Crimp (Omit for Solder Cup)
- **PHM18** — **PHM Cable Clampe Size** See Table I
- **XX** — **Mod. Code Options** See Table II

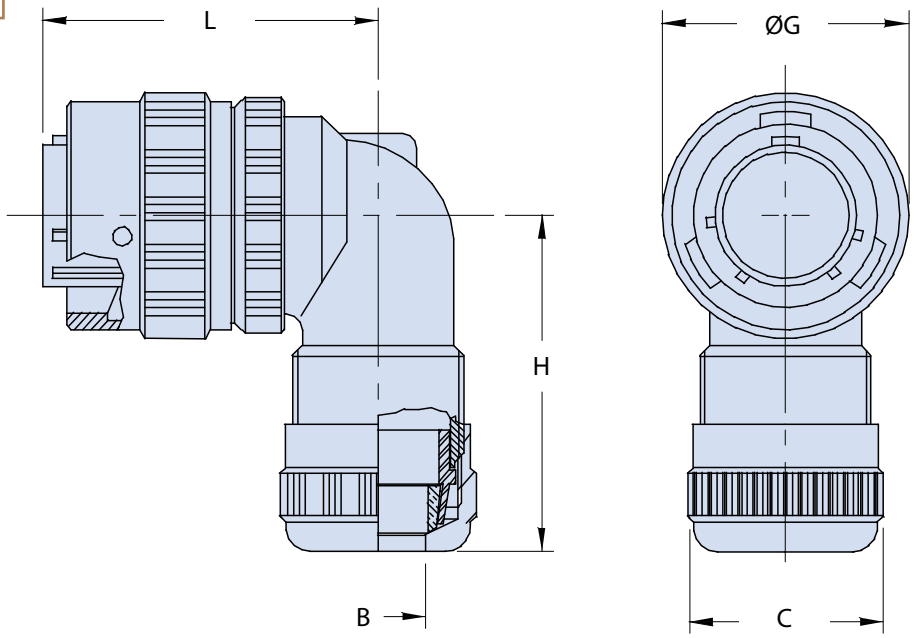

Application Notes

1. Plug with 90° backshell and PHM cable clamp. The PHM cable clamp assures excellent mechanical strength and splash proof sealing (if used with the correct neoprene sealing sleeves).
2. Connector Class "A" (non-environmental)––no grommet supplied.
3. Standard materials configuration consists of aluminum alloy.
4. Standard contact material consists of copper alloy with gold plating over nickel.
5. A broad range of other front and rear connector accessories are available. See our website and/or contact factory for complete information.
6. Standard insert is high insulation synthetic rubber.

© 2015 Glenair, Inc. U.S. CAGE Code 06324 Printed in Italy

Downloaded from Arrow.com.

IPT 08 A...PHM_ _
Plug Connector with 90° PHM Backshell
and Sleeves to Accommodate Various Cable Sizes

TABLE I: DIMENSIONS

Shell size	PHM Cable Clamp Size	B min. - Max.	C Max.	ØG ±0.2	H Max.	L Max.
8	7	2 - 7	15.2	18.10	38.0	36.0
10	9	2 - 9	21.5	21.05	45.0	36.0
12	11	2 - 11	23.5	25.15	43.5	38.0
14	11	2 - 11	25.5	28.40	44.5	41.5
16	11	2 - 11	28.5	31.60	49.0	43.0
18	11 / 18	2 - 11 / 9 - 16.5	34.0	35.00	54.0	48.0
20	18	9 - 16.5	34.0	37.70	54.0	52.0
22	18	9 - 16.5	40.5	40.20	60.0	56.0
24	18 / 22 / 24	9 - 16.5 / 15 - 20 / 19 - 24	40.5	44.00	61.0	57.0

TABLE II: MODIFICATION CODES

CONTACT OPTIONS	
Sym	**Description**
B0	Connector Without Contacts (Only for crimp version)
FINISH OPTIONS	
Sym	**Description and RoHS compliant**
F6	Black Electrodeposited Paint
F7	Black Zinc Nickel
F11	Electroless Nickel
MB	Marine Bronze
Omit for standard version (Cadmium Olive Drab Finish)	

© 2015 Glenair, Inc.

GLENAIR, INC. • 1211 AIR WAY • GLENDALE, CA 91201-2497 • 818-247-6000 • FAX 818-500-9912
www.glenair.com
E-Mail: sales@glenair.com

Downloaded from Arrow.com.

IPT 08 EM
Plug Connector
with 90° Backshell with MS3057-A Cable Clamp

IPT	G	08	EM	18-11	P	Z	C	XX

IPT — **Polychloroprene Insert**

SIPT — **Silicone Insert**

G — **Grounding Fingers** (Omit for Standard)

08 — **Connector Shell Styles**
08 - 90° Backshell

EM — **Environmental Class**
EM - Environmental Plug Connector with Wire Sealing Grommet and 90° Backshell

18-11 — **Shell Size and Insert Arrangement**

P — **Contact Gender**
P - Pin
S - Socket

Z — **Alternate Insert Rotation**
W, X, Y, Z
(Omit for Normal)

C — **Contact Type**
C - Crimp
(Omit for Solder Cup)

XX — **Mod. Code Options**
See Table II

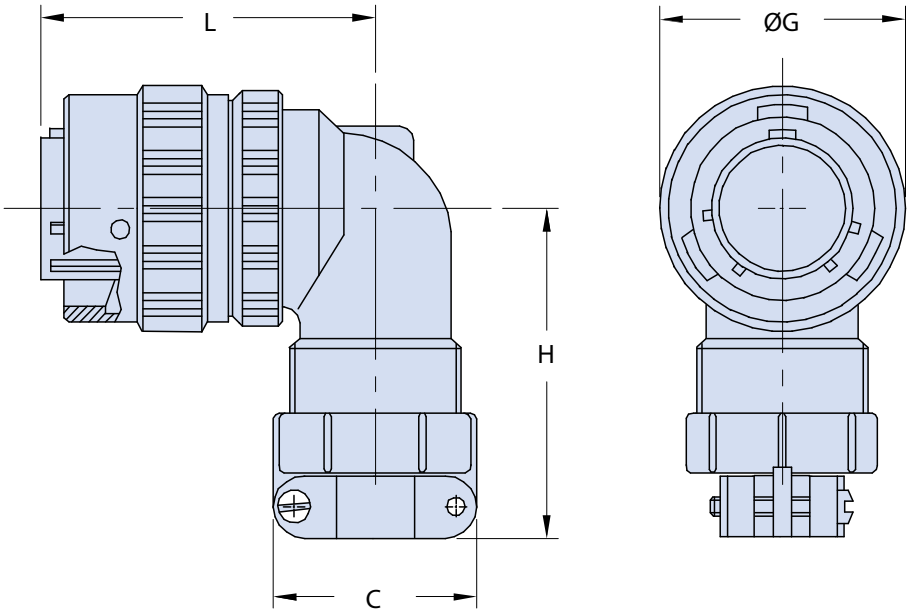

Application Notes

1. Plug with 90° backshell, sealing grommet and 90° Backshell suitable for MS3057-A cable clamp.
2. Connector/Backshell Class "EM" (environmental)––Wire sealing grommet supplied.
3. Standard materials configuration consists of aluminum alloy.
4. Standard contact material consists of copper alloy with gold plating over nickel.
5. A broad range of other front and rear connector accessories are available. See our website and/or contact factory for complete information.
6. Standard insert is high insulation synthetic rubber.

© 2015 Glenair, Inc. U.S. CAGE Code 06324 Printed in Italy

Downloaded from Arrow.com.

IPT 08 EM
Plug Connector
with 90° Backshell with MS3057-A Cable Clamp

TABLE I: DIMENSIONS

Shell size	C Max.	ØG ±0.2	H Max.	L Max.
8	21.2	18.10	31.5	36.0
10	25.5	21.05	37.5	36.0
12	27.5	25.15	40.0	38.0
14	28.5	28.40	43.0	41.5
16	33.0	31.60	46.0	43.0
18	35.5	35.00	48.0	48.0
20	35.5	37.70	48.0	52.0
22	44.0	40.20	53.5	56.0
24	44.0	44.00	53.5	57.0

TABLE II: MODIFICATION CODES

CONTACT OPTIONS	
Sym	**Description**
B0	Connector Without Contacts (Only for crimp version)
FINISH OPTIONS	
Sym	**Description and RoHS compliant**
F6	Black Electrodeposited Paint
F7	Black Zinc Nickel
F11	Electroless Nickel
MB	Marine Bronze
Omit for standard version (Cadmium Olive Drab Finish)	

© 2015 Glenair, Inc.

GLENAIR, INC. • 1211 AIR WAY • GLENDALE, CA 91201-2497 • 818-247-6000 • FAX 818-500-9912
www.glenair.com
E-Mail: sales@glenair.com

Downloaded from Arrow.com.

IPT 08 M
Plug Connector
with 90° Backshell for Shield Termination and Shrink Boot

IPT	G	08	M	18-11	P	Z	C	XX

- **Polychloroprene Insert** — IPT; **Silicone Insert** — SIPT
- **Grounding Fingers** (Omit for Standard) — G
- **Connector Shell Styles** — *08* - 90° Backshell
- **Environmental Class** — *M* - Environmental Plug with Wire 90° Backshell
- **Shell Size and Insert Arrangement** — 18-11
- **Contact Gender** — *P* - Pin; *S* - Socket
- **Alternate Insert Rotation** — W, X, Y, Z (Omit for Normal)
- **Contact Type** — *C* - Crimp (Omit for Solder Cup)
- **Mod. Code Options** — See Table II

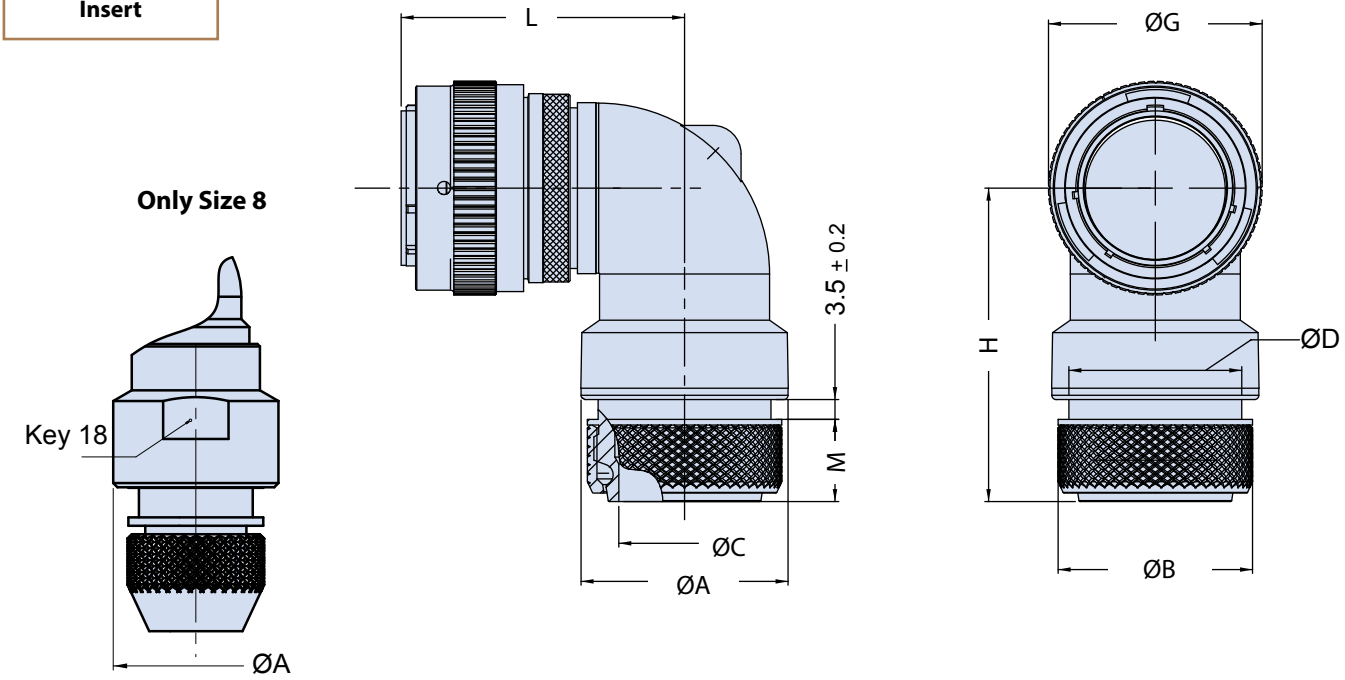

Application Notes

1. Plug with 90° backshell for terminating shielded cable. Also suitable for heat shrink boots.
2. Connector/Backshell Class "M" (environmental)––Wire sealing grommet supplied.
3. Standard materials configuration consists of aluminum alloy.
4. Standard contact material consists of copper alloy with gold plating over nickel.
5. A broad range of other front and rear connector accessories are available. See our website and/or contact factory for complete information.
6. Standard insert is high insulation synthetic rubber.

© 2015 Glenair, Inc. U.S. CAGE Code 06324 Printed in Italy

Downloaded from Arrow.com.

IPT 08 M
Plug Connector
with 90° Backshell for Shield Termination and Shrink Boot

TABLE I: DIMENSIONS

Shell Size	ØA ± 0.2	ØB ± 0.2	ØC +0.1/0	ØD 0/-0.2	M ± 0.5	ØG ±0.2	L Max.	H Max.
8	19.6	16.20	6.80	13.50	13.50	18.10	34.50	45.50
10	19.05	18.30	9.30	15.80	12.50	21.05	37.50	45.10
12	22.00	22.30	12.25	19.80	13.50	25.15	37.50	48.00
14	25.50	25.30	15.40	22.60	14.50	28.40	39.20	49.50
16	30.175	28.30	18.50	26.00	14.50	31.60	44.40	52.70
18	30.175	32.30	20.20	28.20	14.50	35.00	46.60	56.60
20	36.60	34.30	23.30	30.50	14.50	37.70	50.50	55.80
22	36.60	38.20	26.00	34.00	14.50	40.20	54.40	59.60
24	44.80	41.30	29.00	37.20	14.50	44.00	55.70	58.60

TABLE II: MODIFICATION CODES

CONTACT OPTIONS	
Sym	**Description**
B0	Connector Without Contacts (Only for crimp version)
FINISH OPTIONS	
Sym	**Description and RoHS compliant**
F7	Black Zinc Nickel
F11	Electroless Nickel
MB	Marine Bronze
Omit for standard version (Cadmium Olive Drab Finish)	

© 2015 Glenair, Inc.

GLENAIR, INC. • 1211 AIR WAY • GLENDALE, CA 91201-2497 • 818-247-6000 • FAX 818-500-9912
www.glenair.com
E-Mail: sales@glenair.com

Downloaded from Arrow.com.

IPT 26 A
Panel Plug Connector

IPT	G	26	A	18-11	P	Z	C	XX

- **IPT** — **Polychloroprene Insert**
- **SIPT** — **Silicone Insert**
- **G** — **Grounding Fingers** (Omit for Standard)
- **26** — **Connector Shell Styles** *26* - Panel Plug
- **A** — **Environmental Class** *A*- Non nvironmental
- **18-11** — **Shell Size and Insert Arrangement**
- **P** — **Contact Gender** *P* - Pin, *S* - Socket
- **Z** — **Alternate Insert Rotation** W, X, Y, Z (Omit for Normal)
- **C** — **Contact Type** *C* - Crimp (Omit for Solder Cup)
- **XX** — **Mod. Code Options** See Table II

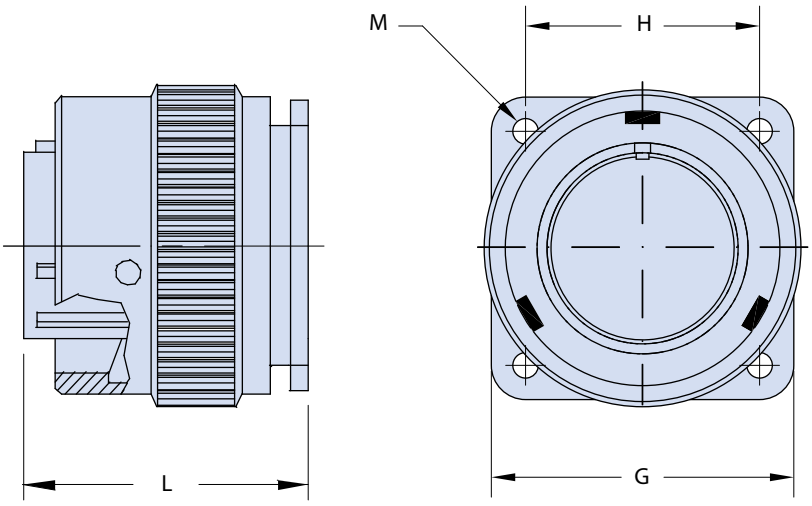

Application Notes

1. Square flange box mount plug connector to be mated with In-line receptacles (IPT01).
2. Connector Class "A" (non-environmental)––no grommet supplied.
3. Standard materials configuration consists of aluminum alloy.
4. Standard contact material consists of copper alloy with gold plating over nickel.
5. Standard insert is high insulation synthetic rubber.

© 2015 Glenair, Inc. U.S. CAGE Code 06324 Printed in Italy

Downloaded from Arrow.com.

IPT 26 A
Panel Plug Connector

TABLE I: DIMENSIONS

Shell size	L Max.	G ±0.4	H ±0.1	M Thread
16	24.5	31.0	24.60	6 - 32UNC
20	28.5	36.5	29.40	6 - 32UNC
22	28.5	39.7	31.75	6 - 32UNC
24	32.0	42.8	34.92	6 - 32UNC

TABLE II: MODIFICATION CODES

CONTACT OPTIONS	
Sym	**Description**
B0	Connector Without Contacts (Only for crimp version)
FINISH OPTIONS	
Sym	**Description and RoHS compliant**
F6	Black Electrodeposited Paint
F7	Black Zinc Nickel
F11	Electroless Nickel
MB	Marine Bronze
Omit for standard version (Cadmium Olive Drab Finish)	

© 2015 Glenair, Inc.

GLENAIR, INC. • 1211 AIR WAY • GLENDALE, CA 91201-2497 • 818-247-6000 • FAX 818-500-9912
www.glenair.com
E-Mail: sales@glenair.com

Downloaded from Arrow.com.

MIL-DTL-5015 TYPE
FIELD-READY
RJ45 ETHERNET

MIL-DTL-5015 TYPE REVERSE-BAYONET

SUPERSEAL™

Rugged environmental MIL-DTL-5015 type Reverse Bayonet Connectors with IP68 sealing, robust insert-to-shell grounding, and a complete range of wire, cable, and circuit board terminations

Features

- **Superior sealing — IP68 when mated—for complete system protection against water, sand and dust**
- **Shielded/grounded coupler designs in both receptacle and plug connectors**
- **Crimp, solder-cup, PC tail, and Quadrax contact/wire termination options**
- **RJ45 plug and/or jack interface options available in Cat 5e or Cat 6a**

SuperSeal™

www.glenair.com

Glenair®

Glenair Italia S.p.A.
Via del lavoro,7
40057 - Quarto Inferiore
Granarolo dell'Emilia
Bologna - Italy
Tel. +39 051 782811
Fax +39 051 782259
info@glenair.it
www.glenair.it

Downloaded from Arrow.com.

IPT SE and IPT Series

Connector Accessories and Tools

Section D

IT 3057-A Cable Clamp / IT 3057-C Cable Clamp	D-2 ; D-3
IT 3420 and IT 3420-A Neoprene Sleeve	D-4
IPT 3180-C and IPT 3180-CF Protective Plug Covers	D-5
IPT 3181-C and IPT 3181-CF Protective Receptacle Covers	D-6
IPT 3181-N and IPT 3181-NF Protective Receptacle Covers	D-7
IT 90376-R and IT 90376-Y Protective Receptacle and Plug Plastic Caps	D-8
IPT 3115 and IPT 3115A Dummy Stowage Receptacles	D-9
10-101949 and 10-101949-S Square Flange Panel Mount Receptacle Sealing Gaskets	D-10
10-101033-11 and 10-101033-12 Sealing Plug for Wire Sealing Grommet	D-11
IPT Series Tools / IPT SE Series Tools	D-12 ; D-13

© 2015 Glenair, Inc. U.S. CAGE Code 06324 Printed in Italy

Downloaded from Arrow.com.

IT 3057-A
Cable Clamp

Mod. Code Options
See Table II

IT **3057-16A** **F11**

MIL-DTL-26482 Serie I Accessory

Finish Options
See Table II

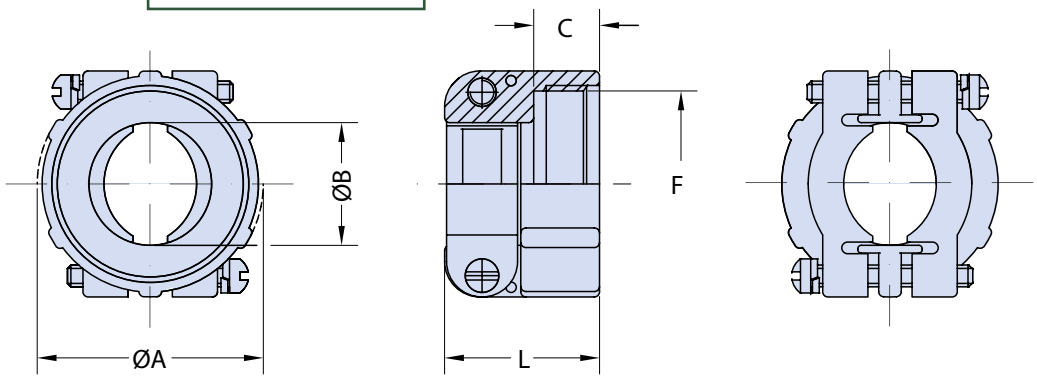

TABLE II: MODIFICATION CODES

Shell Finish (Omit for Standard Cad/Olive Drab Finish)
F6 - Black Electrodeposited Paint (RoHs)
F7 - Black Zinc Nickel (RoHs)
F11 - Electroless Nickel (RoHs)
MB - Marine Bronze (RoHs)

Application Notes
General duty cable clamp suitable for jacketed cable or wires protected by tubing.

TABLE I: DIMENSIONS

GLENAIR P/N	Shell size	Sleeve to use	ØA	ØB	C	F Thread in inches	L
IT3057 - 3A	8	IT3420 - 3	18	6.8	10.2	0.5000 - 28UNEF	20.6
IT3057 - 4A	10	IT3420 - 4	25	8.2	10.2	0.6250 - 24UNEF	21.0
IT3057 - 6A	12	IT3420 - 6	27	11.2	10.2	0.7500 - 20UNEF	22.2
IT3057 - 8A	14	IT3420 - 8	28	14.2	10.2	0.8750 - 20UNEF	24.0
IT3057 - 10A	16	IT3420 - 10	33	16.0	10.2	1.0000 - 20UNEF	28.5
IT3057 - 12A	18	IT3420 - 12	35	19.0	10.2	1.1875 - 18NEF	24.0
IT3057 - 12A	20	IT3420 - 12	35	19.0	10.2	1.1875 - 18NEF	24.0
IT3057 - 16A	22	IT3420 - 16	43	23.8	10.5	1.4375 - 18NEF	26.0
IT3057 - 16A	24	IT3420 - 16	43	23.8	10.5	1.4375 - 18NEF	26.0

© 2015 Glenair, Inc. U.S. CAGE Code 06324 Printed in Italy

Downloaded from Arrow.com.

IT 3057-C
Cable Clamp

Mod. Code Options
See Table II

IT **3057-12C** **F11**

MIL-DTL-26482 Serie I Accessory

Finish Options
See Table II

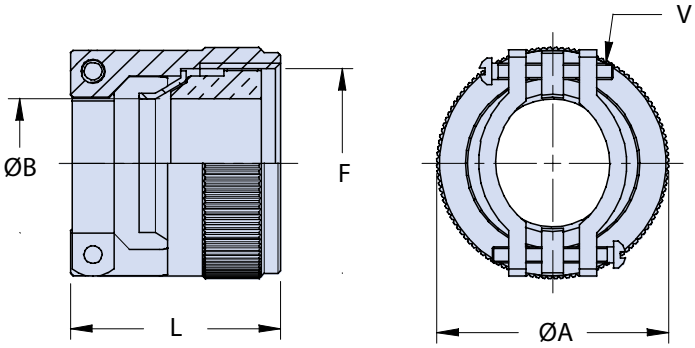

TABLE II: MODIFICATION CODES

Shell Finish (Omit for Standard Cad/Olive Drab Finish)
F6 - Black Electrodeposited Paint (RoHs)
F7 - Black Zinc Nickel (RoHs)
F11 - Electroless Nickel (RoHs)
MB - Marine Bronze (RoHs)

Application Notes

Waterproof cable clamp suitable for jacketed cable or wires protected by tubing. Assures watertight integrity of connector.

D

TABLE I: DIMENSIONS

GLENAIR P/N	Shell size	Sleeve to use	ØA	ØB		F Thread in inches	L	V Thread
				min.	Max.			
IT3057 - 3C	8	IT3420 - 3A	20.0	0.68	5.56	0.5000 - 28UNEF	33.2	6 - 32 NC
IT3057 - 4C	10	IT3420 - 4A	22.6	2.38	7.93	0.6250 - 24UNEF	32.3	6 - 32 NC
IT3057 - 6C	12	IT3420 - 4A / 6A	25.8	5.84	11.12	0.7500 - 20UNEF	32.3	6 - 32 NC
IT3057 - 8C	14	IT3420 - 6A / 8A	28.1	8.00	13.84	0.8750 - 20UNEF	32.3	6 - 32 NC
IT3057 - 10C	16	IT3420 - 6A / 10A	31.0	9.60	15.87	1.0000 - 20UNEF	35.3	6 - 32 NC
IT3057 - 12C	18	IT3420 - 8A / 12A	37.3	11.30	19.00	1.1875 - 18NEF	35.7	8 - 32 NC
IT3057 - 12C	20	IT3420 - 8A / 12A	37.3	11.30	19.00	1.1875 - 18NEF	35.7	8 - 32 NC
IT3057 - 16C	22	IT3420 - 8A / 12A / 16A	42.0	15.50	23.80	1.4375 - 18NEF	38.5	8 - 32 NC
IT3057 - 16C	24	IT3420 - 8A / 12A / 16A	42.0	15.50	23.80	1.4375 - 18NEF	38.5	8 - 32 NC

© 2015 Glenair, Inc. U.S. CAGE Code 06324 Printed in Italy

Downloaded from Arrow.com.

IT 3420 and IT 3420-A Neoprene Sleeve

MIL-DTL-26482 Serie I Accessory	Basic Part Number and Shell Size
IT	3420-3

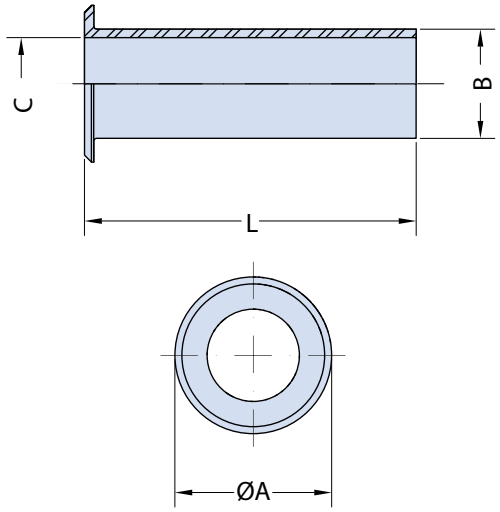

TABLE I: CLASS A CABLE CLAMPS

GLENAIR CODE	ØA	B	C	L
GLENAIR P/N	±0.1	±0.1	±0.1	±0.1
IT3420 - 3	9.5	5.33	3.30	73.0
IT3420 - 4	12.8	7.67	5.58	69.8
IT3420 - 6	15.7	10.84	7.92	66.8
IT3420 - 8	18.8	14:02	11.09	63.5
IT3420 - 10	22.0	15.62	14.27	60.3
IT3420 - 12	27.0	18.79	15.87	57.1
IT3420 - 16	33.3	23:54	19.05	53.9

Application Notes

IT3420 : Neoprene sleeve for protection and reduction, used with class A cable clamps.

D

MIL-DTL-26482 Serie I Accessory	Basic Part Number and Shell Size
IT	3420-3A

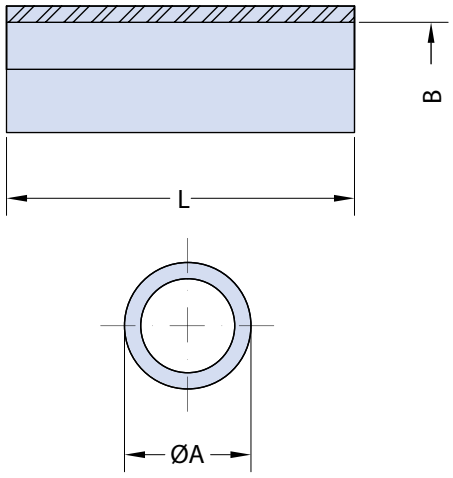

TABLE II: CLASS C CABLE CLAMPS

GLENAIR CODE	ØA	B	L
GLENAIR P/N	±0.1	±0.1	±0.1
IT3420 - 3A	5.30	2.90	50.5
IT3420 - 4A	7.63	5.56	50.5
IT3420 - 6A	10:50	7.93	50.5
IT3420 - 8A	13:50	11.10	50.5
IT3420 - 10A	15.70	11.10	50.5
IT3420 - 12A	18:50	13.74	50.9
IT3420 - 16A	23.60	19.00	50.9

Application Notes

IT3420-A : Neoprene sleeve for protection and reduction, used with class C cable clamps.

© 2015 Glenair, Inc. U.S. CAGE Code 06324 Printed in Italy

Downloaded from Arrow.com.

IPT 3180-C and IPT 3180-CF Protective Plug Covers

MIL-DTL-26482 Serie I Accessory	Basic Part Number and Shell Size	Lanyard Style C - Chain CF - Nylon Cord Z2C - Nylon Cord	Finish Options See Table II
IPT	3180-10	C	F11

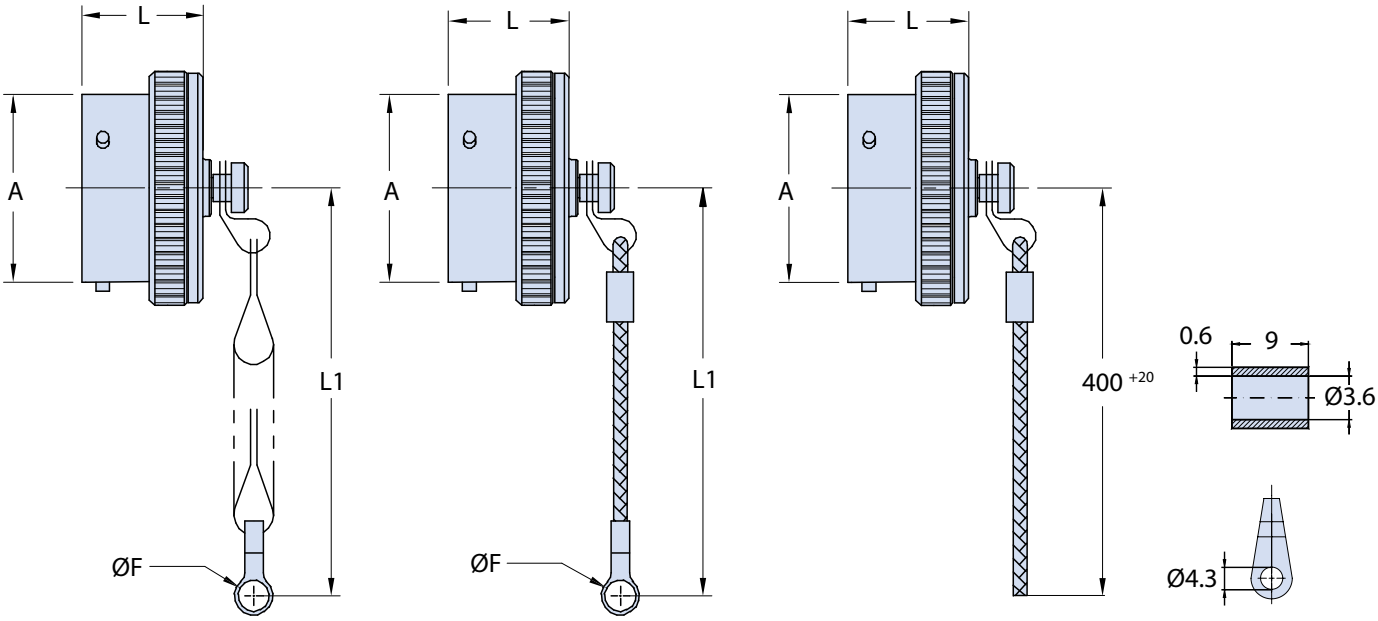

Example: IPT3180-18C
(Stainless Steel Chain)

Example: IPT3180-18CF
(Nylon Cord)

Example: IPT3180-18Z2C
(Nylon Cord with loose terminal link and sleeve)

GLENAIR P/N	Shell size	A +0.02 -0.12	ØF +0.2 0	L +0.6 0	L1 min.
IPT3180-8C	8	12.01	4.3	14.3	76.2
IPT3180-10C	10	14.98	4.3	14.3	76.2
IPT3180-12C	12	19.05	4.3	14.3	88.9
IPT3180-14C	14	22.22	4.3	14.3	88.9
IPT3180-16C	16	25.40	4.3	14.3	88.9
IPT3180-18C	18	28.57	4.3	14.3	88.9
IPT3180-20C	20	31.75	4.3	15.9	101.6
IPT3180-22C	22	34.92	4.3	15.9	101.6
IPT3180-24C	24	38.10	4.3	15.9	101.6

Application Notes

Metal protective cover for plug connectors with stainless steel chain or nylon cord.

TABLE II: MODIFICATION CODES

Shell Finish (Omit for Standard Cad/Olive Drab Finish)
F6 - Black Electrodeposited Paint (RoHs)
F7 - Black Zinc Nickel (RoHs)
F11 - Electroless Nickel (RoHs)
MB - Marine Bronze (RoHs)

© 2015 Glenair, Inc.
U.S. CAGE Code 06324
Printed in Italy

Downloaded from Arrow.com.

IPT 3181-C and IPT 3181-CF Protective Receptacle Covers

MIL-DTL-26482 Serie I Accessory	Basic Part Number and Shell Size	Lanyard Style C - Chain CF - Nylon Cord Z1C - Nylon Cord	Finish Options See Table II
IPT	3181-10	C	F11

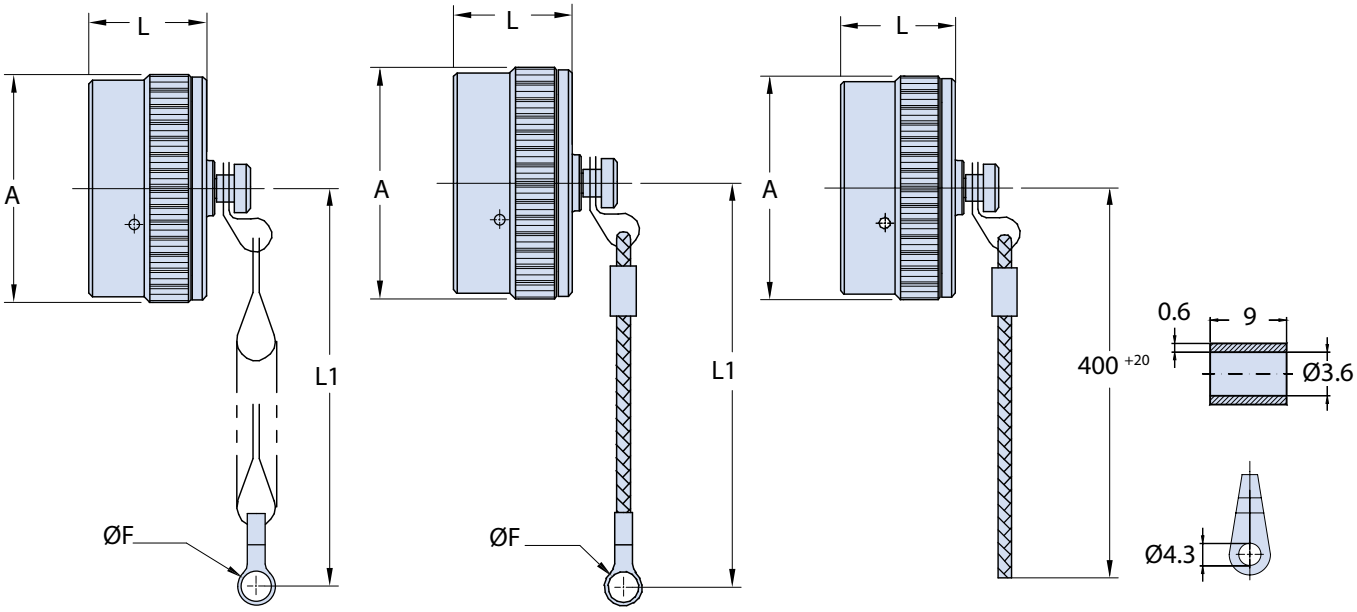

Example: IPT3181-18C
(Stainless Steel Chain)

Example: IPT3181-18CF
(Nylon Cord)

Example: IPT3181-18Z1C
(Nylon Cord with loose terminal link and sleeve)

TABLE I: DIMENSIONS

GLENAIR P/N	Shell size	A Max.	ØF +0.2 -0	L +0.5 -0	L1 min.
IPT3181- 8C	8	17.95	4.3	14.30	76.2
IPT3181-10C	10	21.05	4.3	14.30	76.2
IPT3181-12C	12	25.40	4.3	14.30	88.9
IPT3181-14C	14	28.65	4.3	14.30	88.9
IPT3181-16C	16	31.90	4.3	14.30	88.9
IPT3181-18C	18	35.00	4.3	14.30	88.9
IPT3181-20C	20	38.00	4.3	14.30	101.6
IPT3181-22C	22	41.25	4.3	14.30	101.6
IPT3181-24C	24	44.40	4.3	15.55	101.6

Application Notes

Metal protective cover for receptacle connectors with stainless steel chain or nylon cord.

TABLE II: MODIFICATION CODES

Shell Finish (Omit for Standard Cad/Olive Drab Finish)
F6 - Black Electrodeposited Paint (RoHs)
F7 - Black Zinc Nickel (RoHs)
F11 - Electroless Nickel (RoHs)
MB - Marine Bronze (RoHs)

© 2015 Glenair, Inc. U.S. CAGE Code 06324 Printed in Italy

Downloaded from Arrow.com.

IPT 3181-N and IPT 3181-NF
Protective Jam Nut Receptacle Covers

MIL-DTL-26482 Serie I Accessory

Lanyard Style
N - Chain
NF - Nylon Cord

IPT **3181-10** **N** **F11**

Basic Part Number and Shell Size

Finish Options
See Table II

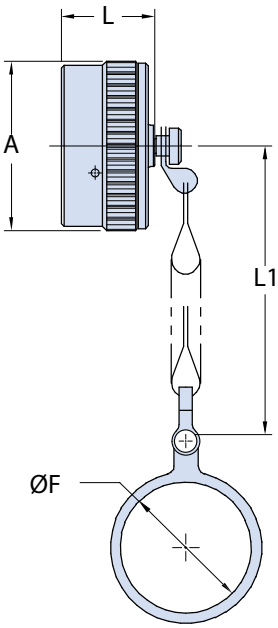

Example: IPT3181-18N
(Stainless Steel Chain)

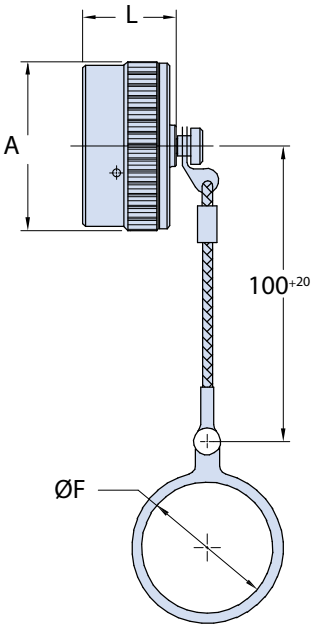

Example: IPT3181-18NF
(Nylon Cord)

TABLE I: DIMENSIONS

GLENAIR P/N	Shell size	A Max.	ØF +0.2 -0.1	L +0.25 -0	L1 ±3
IPT3181- 8N	8	17.95	14.70	14.30	76.2
IPT3181-10N	10	21.05	17.85	14.30	76.2
IPT3181-12N	12	25.40	22.65	14.30	88.9
IPT3181-14N	14	28.65	25.80	14.30	88.9
IPT3181-16N	16	31.90	29.00	14.30	88.9
IPT3181-18N	18	35.00	32.15	14.30	88.9
IPT3181-20N	20	38.00	35.35	14.30	101.6
IPT3181-22N	22	41.25	38.50	14.30	101.6
IPT3181-24N	24	44.40	41.00	15.55	101.6

Application Notes

Metal protective cover for jam nut receptacle connectors with stainless steel chain or nylon cord.

TABLE II: MODIFICATION CODES

Shell Finish (Omit for Standard Cad/Olive Drab Finish)
F6 - Black Electrodeposited Paint (RoHs)
F7 - Black Zinc Nickel (RoHs)
F11 - Electroless Nickel (RoHs)
MB - Marine Bronze (RoHs)

© 2015 Glenair, Inc. U.S. CAGE Code 06324 Printed in Italy

Downloaded from Arrow.com.

IT 90376-R and IT 90376-Y
Protective Receptacle and Plug Plastic Caps

MIL-DTL-26482 Serie I Accessory	Basic Part Number and Shell Size
IT	90376-10R

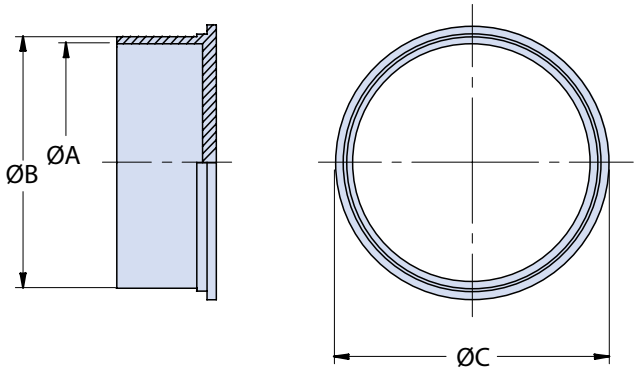

Application Notes

Plastic caps for protection against dust and damage.

TABLE I: RECEPTACLE CAP DIMENSIONS

GLENAIR P/N	Shell size	ØA ±0.25	ØB ±0.25	ØC ±0.78
IT 90376- 8R	Receptacle 8	12.19	13.71	18.79
IT 90376-10R	Receptacle 10	15.36	16.89	21.33
IT 90376-14Y	Receptacle 12	18.28	19.68	24.63
IT 90376-16Y	Receptacle 14	21.59	22.98	28.57
IT 90376-18Y	Receptacle 16	24.71	26.28	30.98
IT 90376-20Y	Receptacle 18	27.76	29.33	33.78
IT 90376-22Y	Receptacle 20	31.26	33.04	37.21
IT 90376-24Y	Receptacle 22	34.03	35.81	40.38
IT 90376-24R	Receptacle 24	37.16	38.93	43.18

TABLE II: PLUG CAP DIMENSIONS

GLENAIR P/N	Shell size	ØA ±0.25	ØB ±0.25	ØC ±0.78
IT 90376- 8Y	Plug 8	10.49	12.26	17.01
IT 90376- 8R	Plug 10	13.46	15.11	19.05
IT 90376-12Y	Plug 12	16.63	18.16	21.84
IT 90376-12R	Plug 14	19.93	21.46	26.18
IT 90376-16Y	Plug 16	22.68	24.46	28.57
IT 90376-16R	Plug 18	26.11	27.63	31.75
IT 90376-18R	Plug 20	29.21	30.86	35.71
IT 90376-20R	Plug 22	32.25	34.03	38.10
IT 90376-22R	Plug 24	35.30	37.08	41.65

© 2015 Glenair, Inc. U.S. CAGE Code 06324 Printed in Italy

Downloaded from Arrow.com.

IPT 3115 and IPT 3115A
Dummy Stowage Receptacles

MIL-DTL-26482 Serie I Accessory	Basic Part Number and Shell Size	Finish Options See Table II
IPT	3115-10	F11

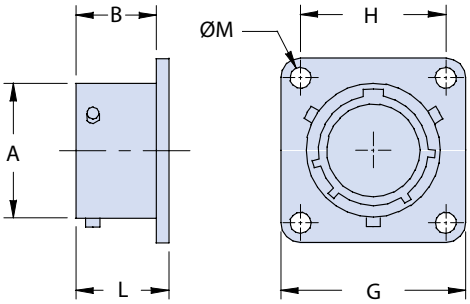

Application Notes

IPT3115 : Dummy receptacle with rear base and seal. In conformity with MIL-DTL-26482 Serie I.

MIL-DTL-26482 Serie I Accessory	Basic Part Number and Shell Size	Finish Options See Table II
IPT	3115-10A	F11

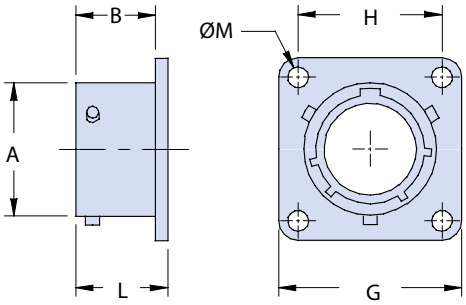

Application Notes

IPT3115A : Dummy receptacle without rear base and seal.

D

TABLE I

Shell size	A +0.02 -0.12	B +0.25 -0	G ±0.4	H ±0.1	L +0.6 -0.25	ØM +0.1 0
8	12.01	10.95	20.6	15.10	12.5	3.04
10	14.98	10.95	23.8	18.25	12.5	3.04
12	19.05	10.95	26.2	20.60	12.5	3.04
14	22.22	10.95	28.6	23.00	12.5	3.04
16	25.40	10.95	31.0	24.60	12.5	3.04
18	28.57	10.95	33.3	27.00	12.5	3.04
20	31.75	14.10	36.5	29.35	16.5	3.04
22	34.92	14.10	39.7	31.75	16.5	3.04
24	38.10	15.00	42.8	34.92	17.3	3.73

TABLE II: MODIFICATION CODES

Shell Finish (Omit for Standard Cad/Olive Drab Finish)
F6 - Black Electrodeposited Paint (RoHs)
F7 - Black Zinc Nickel (RoHs)
F11 - Electroless Nickel (RoHs)
MB - Marine Bronze (RoHs)

© 2015 Glenair, Inc. U.S. CAGE Code 06324 Printed in Italy

Downloaded from Arrow.com.

10-101949 and 10-101949-S
Square Flange Panel Mount
Receptacle Sealing Gaskets

Basic Part Number and Shell Size	Shell size	
10-101949	14	S

Conductivity
Omit for non Conductive
S - Conductive Material

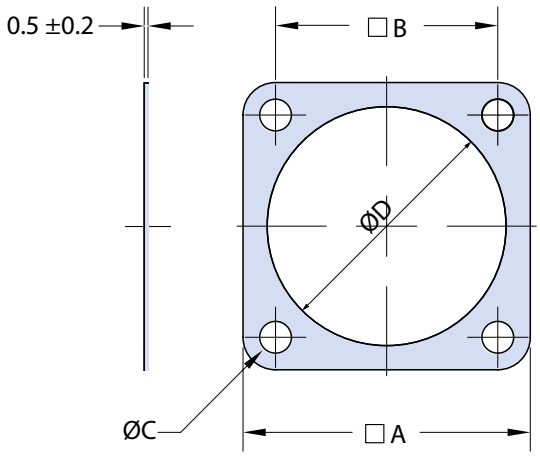

Example: 10-101949-XX
(Neoprene - Non Conductive)

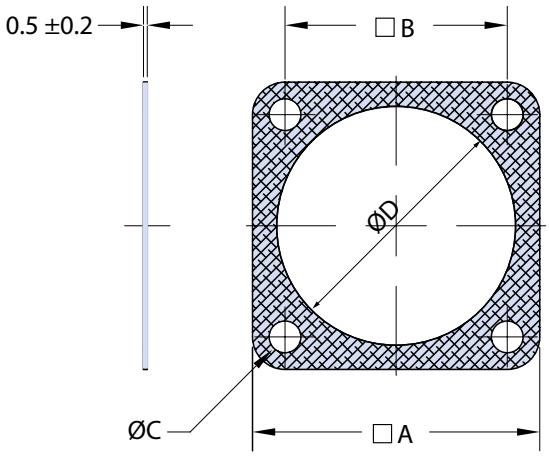

Example: 10-101949-XXS
(Conductive)

OBSOLETE
FOR NEW DESIGNS!
Please contact the factory

D

TABLE I (NON CONDUCTIVE)

GLENAIR P/N	Shell size	□A Max	□B ±0.3	ØC min.	ØD +0.1 / 0
10-101949-8	8	22.7	15.10	3.1	12.7
10-101949-10	10	25.8	18.30	3.1	15.9
10-101949-12	12	28.2	20.60	3.1	19.0
10-101949-14	14	30.6	23.00	3.1	22.2
10-101949-16	16	33.0	24.60	3.1	25.4
10-101949-18	18	35.4	27.00	3.1	28.6
10-101949-20	20	38.5	29.40	3.1	31.7
10-101949-22	22	41.7	31.80	3.1	34.9
10-101949-24	24	44.9	34.90	4.2	38.1

TABLE II (CONDUCTIVE)

GLENAIR P/N	Shell size	□A Max	□B ±0.3	ØC min.	ØD +0.1 / 0
10-101949-8S	8	20.6	15.10	3.3	12.7
10-101949-10S	10	23.8	18.25	3.3	15.9
10-101949-12S	12	26.2	20.60	3.3	19.1
10-101949-14S	14	28.6	23.00	3.3	22.3
10-101949-16S	16	31.0	24.60	3.3	25.5
10-101949-18S	18	33.3	27.00	3.3	28.6
10-101949-20S	20	36.5	29.35	3.3	31.8
10-101949-22S	22	39.7	31.75	3.3	35.0
10-101949-24S	24	42.9	34.90	4.0	38.2

© 2015 Glenair, Inc. U.S. CAGE Code 06324 Printed in Italy

Downloaded from Arrow.com.

Sealing Plug
for Wire Sealing Grommet

Basic Part Number

10-101033

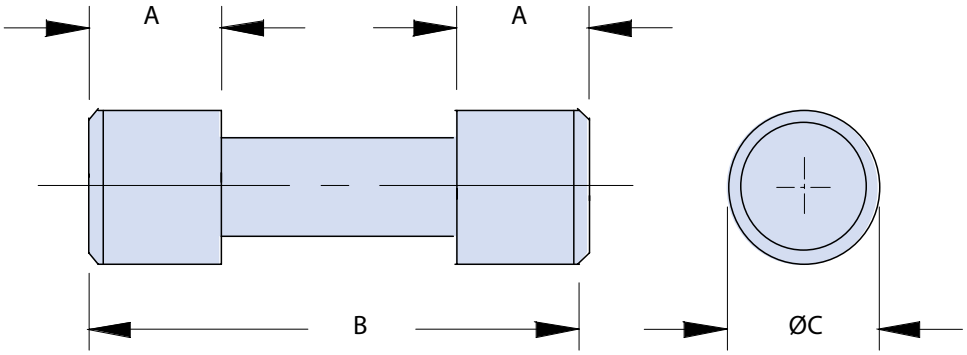

TABLE I

GLENAIR P/N	Contact size	A ±0.13	B ±0.25	ØC ±0.13	Color
10-101033-11	20	2.92	9.53	2.92	Red
10-101033-12	16	3.17	11.91	3.68	Blue
10-101033-13	12	4.60	3.70	3.20	Yellow

© 2015 Glenair, Inc. U.S. CAGE Code 06324 Printed in Italy

Downloaded from Arrow.com.

IPT Series Tools

IPT CRIMP TOOLS - PIN CONTACTS

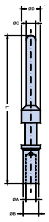

Type of contact	Connector Size	A	ØB	ØC	ØD	Conductor Size mm²	Conductor Size AWG	MANUAL TOOL		*PNEUMATIC TOOL TYPE "A"		TURRET		INSERTION TOOL		EXTRACTION TOOL	
10-374-20	20S	8÷18	20,4	1	1,3	1,93	0,2÷0,5	20 22 24	M. 105001	M22520.1.01 AF8 DMC	M. 105003	WA27F DMC	M. 105011 (or M.105008)	M22520/1.02 DMC TH1A (or VH441 DMC)	M. 117346	GLENAIR IT TOOL	M. 118251	GLENAIR IT TOOL
10-375-20	20	20÷24	24,3	1	1,3	1,93	0,2÷0,5	20 22 24	M. 105001	M22520.1.01 AF8 DMC	M. 105003	WA27F DMC	M. 105011 (or M.105008)	M22520/1.02 DMC TH1A (or VH441 DMC)	M. 117346	GLENAIR IT TOOL	M. 118251	GLENAIR IT TOOL
10-374-16	16S	8÷18	22,3	1,57	1,72	2,6	0,5÷1	16 18 20	M. 105001	M22520.1.01 AF8 DMC	M. 105003	WA27F DMC	M. 105011 (or M.105008)	M22520/1.02 DMC TH1A (or VH441 DMC)	M. 117083	GLENAIR IT TOOL	M. 118251	GLENAIR IT TOOL
10-375-16	16	20÷24	24,3	1,57	1,72	2,6	0,2÷0,5	16 18 20	M. 105001	M22520.1.01 AF8 DMC	M. 105003	WA27F DMC	M. 105011 (or M.105008)	M22520/1.02 DMC TH1A (or VH441 DMC)	M. 117083	GLENAIR IT TOOL	M. 118251	GLENAIR IT TOOL
10-373-12S	12S	8÷18	22,5	2,38	2,5	3,8	2,5÷3	14 12	M. 105001	M22520.1.01 AF8 DMC	M. 105003	WA27F DMC	M. 105012	M22520/1.05	M. 117082	GLENAIR IT TOOL	M. 118250	GLENAIR IT TOOL
10-373-12	12	8÷18	26,3	2,38	2,5	3,8	2,5÷3	14 12	M. 105001	M22520.1.01 AF8 DMC	M. 105003	WA27F DMC	M. 105012	M22520/1.05	M. 117082	GLENAIR IT TOOL	M. 118250	GLENAIR IT TOOL

IPT CRIMP TOOLS - SOCKET CONTACTS

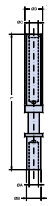

Type of contact	Connector Size	A	ØB	ØC	ØD	Conductor Size mm²	Conductor Size AWG	MANUAL TOOL		*PNEUMATIC TOOL TYPE "A"		TURRET		INSERTION TOOL		EXTRACTION TOOL		GUIDE PIN	
10-571-20LC	20S	8÷18	20,4	1,08	1,3	1,93	0,2-0,5	20 22 24	M. 105001	M22520.1.0 1AF8 DMC	M. 105003	WA27F DMC	M. 105011 (or M.105008)	M22520/1.02 DMC TH1A (or VH441 DMC)	M. 117346	GLENAIR IT TOOL	M. 118251	GLENAIR IT TOOL	M. 125007	GLENAIR IT TOOL
10-573-20LC	20	20÷24	24,3	1,08	1,3	1,93	0,2-0,5	20 22 24	M. 105001	M22520.1.0 1AF8 DMC	M. 105003	WA27F DMC	M. 105011 (or M.105008)	M22520/1.02 DMC TH1A (or VH441 DMC)	M. 117346	GLENAIR IT TOOL	M. 118251	GLENAIR IT TOOL	M. 125007	GLENAIR IT TOOL
10-571-16LC	16S	8÷18	22,3	1,07	1,72	2,6	0,5 ÷1	16 18 20	M. 105001	M22520.1.0 1AF8 DMC	M. 105003	WA27F DMC	M. 105001 (or M.105008)	M22520/1.02 DMC TH1A (or VH441 DMC)	M. 117083	GLENAIR IT TOOL	M. 118251	GLENAIR IT TOOL	M. 125001	GLENAIR IT TOOL
10-573-16LC	16	20÷24	24,3	1,07	1,72	2,6	0,5-1	16 18 20	M. 105001	M22520.1.0 1AF8 DMC	M. 105003	WA27F DMC	M. 105011 (or M.105008)	M22520/1.02 DMC TH1A (or VH441 DMC)	M. 117083	GLENAIR IT TOOL	M. 118251	GLENAIR IT TOOL	M. 125001	GLENAIR IT TOOL
10-576-12S	12S	8÷18	21,45	2,48	2,5	3,8	2,5÷3	14 12	M. 105001	M22520.1.01 AF8 DMC	M. 105003	WA27F DMC	M. 105012	M22520/1.05	M. 117082	GLENAIR IT TOOL	M. 118250	GLENAIR IT TOOL	M. 125002	GLENAIR IT TOOL
10-576-12	12	8÷18	25,4	2,48	2,5	3,8	2,5÷3	14 12	M. 105001	M22520.1.01 AF8 DMC	M. 105003	WA27F DMC	M. 105012	M22520/1.05	M. 117082	GLENAIR IT TOOL	M. 118250	GLENAIR IT TOOL	M. 125002	GLENAIR IT TOOL

*** Use together as alternative.**

© 2015 Glenair, Inc. U.S. CAGE Code 06324 Printed in Italy

Downloaded from Arrow.com.

IPT-SE CRIMP TOOLS - PIN AND SOCKET CONTACTS

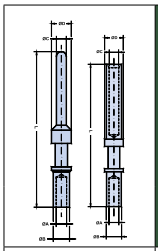	Type of contact	Conductor Size								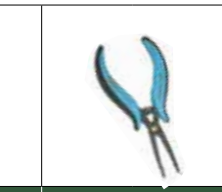			
		mm²	AWG	MANUAL T OOL		*PNEUMATIC TOOL TYPE "A"		TURRET		INSERTION TOOL		EXTRACTION TOOL	
10-314980-20P	20	0,2-0,5	20 2 2 24	M. 105001	M22520.1.01 AF8 DMC	M. 105003	WA27F DMC	M. 105011 (or M.105008)	M22520/1.02 DMC TH1A (or VH441 DMC)	M. 117349	GLENAIR IT TOOL	M. 118290	GLENAIR IT TOOL
10-314980-20S	20	0,2-0,5	20 22 24	M. 105001	M22520.1.01 AF8 DMC	M. 105003	WA27F DMC	M. 105011 (or M.105008)	M22520/1.02 DMC TH1A (or VH441 DMC)	M. 117349	GLENAIR IT TOOL	M. 118290	GLENAIR IT TOOL
10-314980-16S	16	0,5 ÷1	16 18 20	M. 105001	M22520.1.01 AF8 DMC	M. 105003	WA27F DMC	M. 105011 (or M.105008)	M22520/1.02 DMC TH1A (or VH441 DMC)	M. 117350	GLENAIR IT TOOL	M. 118291	GLENAIR IT TOOL
10-314980-16P	16	0,5 ÷1	16 18 20	M. 105001	M22520.1.01 AF8 DMC	M. 105003	WA27F DMC	M. 105011 (or M.105008)	M22520/1.02 DMC TH1A (or VH441 DMC)	M. 117350	GLENAIR IT TOOL	M. 118291	GLENAIR IT TOOL

*** Use together as alternative.**

D

© 2015 Glenair, Inc.

Downloaded from Arrow.com.

The Faster 4/8 Pole Interconnect System for Ethernet Data Applications

ITH connector with Octobyte™ contacts is available with fully dedicated ETHERNET protocol or in a combo version where a mix of signal-power and Ethernet is required. RoHS compliant, IP67 (IP68 on request) exceeds performance expections typical in harsh environmental applications found throughout Rail and Industrial markets.

OCTOBYTE™ contacts are vibration resistant and available to work with ETHERNET cables from CAT 5 to CAT 7A, MVB-WTB, RG58 Coax.

Adam E. Moreira

Commuter Applications

Masakazu Matsumoto

Passenger Information Systems

ITH connectors with OCTOBYTE™ contacts are easy and fast to assemble, making them best solution for harsh environment applications where signal reliability is a must:

- **Commuter Rail**
- **Passenger Information Systems** (Audio/Video/Digital displays)
- **Monitoring and Control** (Braking/Doors/Lighting/Data)
- **Heavy Industry**
- **Data Control**
- **Safety Systems**

Tested according to:
ISO F0 STP: CAT 7A
EN50173-1 F600-STP: CAT 7
EN50173-1 D STP: CAT 5E

Tested for compliance according to EN50173-1 standards set for CAT5E and CAT7. Testing was conducted using 12 jumpers, each 7.5 mt. in length for a total of 90 mt.

Glenair®

Glenair Italia S.p.A.
Via del Lavoro, 7.
40057 - Quarto Inferiore
Granarolo dell'Emilia
Bologna - Italy
Tel. +39 051 782811
Fax +39 051 782259
info@glenair.it
www.glenair.it

Downloaded from Arrow.com.

IPT SE and IPT Series

Product index

Section E

Additional Interconnect Solutions from the Glenair Power Products Group — **E-2 ; E-3**

INDEX — **E-5**

© 2015 Glenair, Inc. U.S. CAGE Code 06324 Printed in Italy

Downloaded from Arrow.com.

Glenair®

Additional Interconnect Solutions from the Glenair Power Products Group

Industry standard reverse-bayonet power and signal connectors (Glenair Series ITS)

- **Dozens of proven connector technologies for harsh application environments**
- **Hundreds of power and signal contact arrangements (crimp and solder)**
- **Threaded, reverse bayonet, and innovative latch-and-lock coupling technologies**
- **Flame-resistant, caustic substance-free material choices for RoHS and other compliance standards**

Industrial power and signal connectors for rugged applications—from mining equipment to monorails

RoHS-Compliant Versions Available

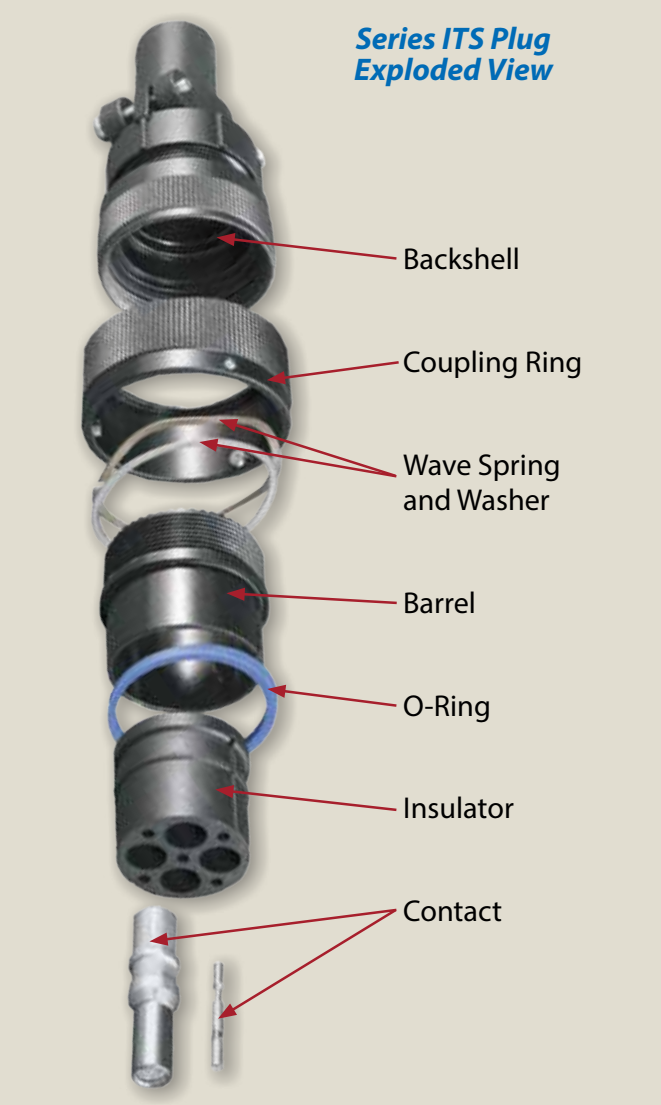

Wide range of available catalog solutions
Series ITS *- Reverse-Bayonet Power and Signal*
Series IT *- Threaded Coupling Power and Signal*
Series ITH *- High Performance Rigid Insert Power*
Series IPT *- Standard Bayonet Power and Signal*
Series IPT-SE *- Standard Bayonet Crimp Contact*
VG95234 *- German Rail Qualified Reverse Bayonet*
VG95328 *- German Rail Qualified Standard Bayonet*
VG96929 *- German Rail Qualfied High Voltage*
Series ITZ *- Triple-Start Thread Power and Signal*
Series IRT *- High Current High Voltage Rectangular*
Series 901 *- High Current Medium Voltage Circular*
Series 500 *- Reverse-Bayonet Single-Pole High Voltage*
Series UJ *- High Voltage Power Joint Connection System*

Glenair high-power tractor connector with TurboFlex™ cable, locking/lever coupling, and flexible standoff

© 2015 Glenair, Inc. U.S. CAGE Code 06324 Printed in Italy

Downloaded from Arrow.com.

Additional Interconnect Solutions from the Glenair Power Products Group

Glenair Industrial/Rail Power and Signal Circular Connectors

ITS-RG
Rubber-Coated

ITH
Rigid Insert

IPT and IPT SE
Standard Bayonet

Series ITS
Reverse-Bayonet

VG96929
Single-Pole High Current

VG95328 Qualified
Bayonet-Lock Connectors

Series CX
Coaxial Connector

Series IT
Threaded Coupling

ITZ
Triple-Start Coupling

High-Current High-Voltage Power Connectors for Rail Applications

IRT Series Rectangular
Multipole High Voltage
Connectors

ITS 901 Series Reverse Bayonet
Multi-Pole
Medium Voltage Connectors

ITS 500 Series Reverse Bayonet
Single-Pole
High Voltage Connectors

UJ Series Connector System

Innovative tool-free locking and latching mechanisms

© 2015 Glenair, Inc. U.S. CAGE Code 06324 Printed in Italy

Downloaded from Arrow.com.

ETHERNET, VIDEO, AND HIGH-SPEED DATA NETWORKING

OPTO-ELECTRONIC INTERCONNECT SOLUTIONS

For size and weight savings in avionics, naval, ground tactical equipment, oil and gas, industrial, mining, in-flight entertainment, and other harsh application environments

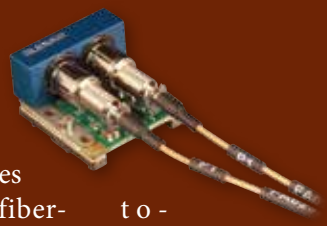

The need for reduced weight and small form-factor components, particularly in airframe and other high-performance environments, has led Glenair to develop a revolutionary new opto-electronic product series that incorporates transmitter and receiver functions, fiber-to-copper media conversion, and signal aggregation directly into interconnect wiring systems. These harsh-environment interconnect technologies reduce size and weight, and improve the performance of Ethernet, Video and High-Speed Digital applications—by leveraging the strengths of both electrical and optical media. Glenair offers both standard catalog solutions, as well as the integration of electronics or opto-electronics into rugged custom packages and cable assemblies per customer and application requirements.

Glenair®

Glenair, Inc.
1211 Air Way
Glendale, CA
91201-2497
818-247-6000
sales@glenair.com
www.glenair.com

Downloaded from Arrow.com.

Glenair IPT SE and IPT Series Product Index

Series IPT SE

Summary of Connector Styles and Backshell	A-1
IPT SE Series	B-1
High Performance Crimp Contact - Bayonet-Lock Signal Connectors (MIL-C-26482 Type)	B-2
High Performance Crimp Contact (MIL-C-26482 Type) - Styles and Classes	B-3
High Performance Crimp Contact (MIL-C-26482 Type) - Technical Data	B-5
How To Order - Part Number Breakdown	B-6
VG95328 Part Number Cross Reference	B-7
Materials and Finishes	B-8
Contact Dimensions - Pin and Socket	B-9
Insert Arrangement Tables and Sealing Plugs	B-10
Available Insert Arrangements	B-11
Fastener Height Requirements and Panel Cutout Dimensions	B-13
IPT 00 ASE Front Panel Mount Square Flange Receptacle with Backshell	B-14
IPT 00 SE Front Panel Mount Square Flange Receptacle with General Duty Backshell	B-16
IPT 00 ASE...N0 Front Panel Mount Square Flange Receptacle without Backshell	B-18
IPT 00 SE...SR Front Panel Mount Square Flange Receptacle with Backshell, Cable Clamp and Bushing.	B-20
IPT 00 GSE Front Panel Mount Square Flange Receptacle with Shrink Boot Backshell	B-22
IPT 00 MSE Front Panel Mount Square Flange Receptacle with Backshell for EMI Shield Termination and Shrink Boot	B-24
IPT 01 ASE In-Line Cable Connector with Backshell	B-26
IPT 01 SE In-Line Cable Connector with General Duty Backshell	B-28
IPT 01 ASE...N0 In-Line Cable Connector	B-30
IPT 01 SE...SR In-Line Cable Connector with Backshell, Cable Clamp and Bushing	B-32
IPT 01 GSE In-Line Cable Connector with Shrink Boot Backshell	B-34
IPT 01 MSE In-Line Cable Connector with Backshell for EMI Shield Termination and Shrink Boot	B-36
IPT 02 SE Box Mount Square Flange Receptacle	B-38
IPT 02 PP Through Bulkhead Receptacle	B-40
IPT 06 ASE Straight Plug Connector with Backshell to Accomodate MS3057 Cable Clamp (not included)	B-42

© 2015 Glenair, Inc. U.S. CAGE Code 06324 Printed in Italy

Downloaded from Arrow.com.

Glenair IPT SE and IPT Series
Product Index

IPT 06 SE Straight Plug Connector with General Duty Backshell	B-44
IPT 06 ASE...N0 Straight Plug Connector without Backshell	B-46
IPT 06 SE...SR Straight Plug Connector with Backshell, Cable Clamp and Bushing	B-48
IPT 06 GSE Straight Plug Connector with Shrink Boot Backshell	B-50
IPT 06 MSE Straight Plug Connector with Backshell for EMI Shield Termination and Heat Shrink Boot	B-52
IPT 07 SE Rear Panel Mount Jam Nut Receptacle Connector with General Duty Backshell	B-54
IPT 07 SE...SR Rear Panel Mount Jam Nut Receptacle Connector and Backshell with Cable Clamp and Bushing	B-56
IPT 07 GSE Rear Panel Mount Jam Nut Receptacle Connector with Shrink Boot Backshell	B-58
IPT 07 MSE Rear Panel Mount Jam Nut Receptacle Connector with Backshell for EMI Shield Termination and Shrink Boot	B-60
IPT 08 MSE 90°Plug Connector with Backshell for EMI Shield Termination and Shrink Boot	B-62

Series IPT

IPT Series	C-1
Bayonet-Lock Signal Connectors (MIL-C-26482 Type) - Product Line Overview	C-2
High Performance Crimp Contact (MIL-C-26482 Type) - Styles and Classes	C-4
How To Order - Part Number Breakdown	C-7
Cross Section	C-8
Technical Data	C-9
Materials and Finishes	C-10
Contact Dimensions - Pin and Socket	C-11
Insert Arrangement Tables and Alternate Insert Positions	C-12
Alternate Key Positions	C-13
Fastener Height Requirements and Panel Cutout Dimensions	C-14
Available Insert Arrangements	C-15
IPT 00 A Wall Mounting Receptacle with Backshell	C-18
IPT 00 A...N0 Wall Mounting Receptacle without Backshell	C-20
IPT 00 A...PG Wall Mounting Receptacle with PG Threaded Backshell	C-22
IPT 00 A...PH Wall Mounting Receptacle with Backshell and PG Cable Gland	C-24

© 2015 Glenair, Inc. U.S. CAGE Code 06324 Printed in Italy

Downloaded from Arrow.com.

Glenair IPT SE and IPT Series Product Index

IPT 00 A...PHM Wall Mounting Receptacle with PHM Backshell and Sleeves to Accomodate Various Cable Size	C-26
IPT 00 A...SR Wall Mounting Receptacle with Backshell, Bushing and Cable Clamp	C-28
IPT 00 E Wall Mounting Receptacle with General Duty Backshell	C-30
IPT 00 E...SR Wall Mounting Receptacle with Backshell, Bushing and Cable Clamp	C-32
IPT 00 G Wall Mounting Receptacle with Shrink Boot Backshell	C-34
IPT 00 J Wall Mounting Receptacle with Long Backshell and Cable Clamp	C-36
IPT 00 M Wall Mounting Receptacle with Backshell for EMI Shield Termination and Shrink Boot	C-38
IPT 00 W Wall Mounting Receptacle with Long Backshell, Metal Sleeve and Gland Seal	C-40
IPT 01 A In-Line Cable Connector with General Duty Backshell	C-42
IPT 01 A...N0 In-Line Cable Connector without Backshell	C-44
IPT 01 A...PG In-Line Cable Connector with PG Threaded Backshell	C-46
IPT 01 A...PH In-Line Cable Connector with Backshell and Plastic PG Cable Gland	C-48
IPT 01 A...PHM In-Line Cable Connector with PHM Backshell and Sleeves to Accommodate Various Cable Sizes	C-50
IPT 01 A...SR In-Line Cable Connector with Backshell, Cable Clamp and Bushing	C-52
IPT 01 E In-Line Cable Connector with General Duty Backshell	C-54
IPT 01 E...SR In-Line Cable Connector with Backshell, Cable Clamp and Bushing	C-56
IPT 01 G In-Line Cable Connector with Shrink Boot Backshell	C-58
IPT 01 J In-Line Cable Connector with Backshell, Cable Clamp and Sleeve	C-60
IPT 01 M In-Line Cable Connector with Backshell for EMI Shield Termination and Shrink Boot	C-62
IPT 01 W In-Line Cable Connector with Long Backshell, Metal Sleeve and Gland Seal	C-64
IPT 02 PP Through Bulkhead Receptacle	C-66
IPT 02 A and IPT 02 E Box Mounting Receptacle	C-68
IPT 02 Y Box Mounting Receptacle with Printed Circuit Board Terminations	C-70
IPT 06 A Straight Plug Connector with Backshell to Accommodate MS3057 Cable Clamp (not included)	C-72
IPT 06 A...N0 Straight Plug Connector with Accessory Threads	C-74
IPT 06 A...AT Straight Plug Connector with Accessory Threads and Arctic Coupling Nut	C-76

© 2015 Glenair, Inc. U.S. CAGE Code 06324 Printed in Italy

Downloaded from Arrow.com.

Glenair IPT SE and IPT Series
Product Index

IPT 06 A...PG Straight Plug Connector with PG Threaded Backshell	C-78
IPT 06 A...PH Straight Plug Connector with Backshell and PG Cable Gland	C-80
IPT 06 A...PHM Straight Plug Connector with PHM Backshell and Sleeves to Accommodate Various Cable Sizes	C-82
IPT 06 A...PHM_ _EMI67 Straight Plug Connector with Backshell for EMI Shield Termination	C-84
IPT 06 A...SR Straight Plug Connector with Backshell, Cable Clamp and Bushing	C-86
IPT 06 E Straight Plug Connector with General Duty Backshell	C-88
IPT 06 E...PG Straight Plug Connector with PG Threaded Backshell	C-90
IPT 06 E...SR Straight Plug Connector with Backshell, Cable Clamp and Bushing	C-92
IPT 06 G Straight Plug Connecto r with Backshell for Heat Shrink Boot	C-94
PT 06 J Straight Plug Connector with Long Backshell, Metal Sleeve, Cable Sealing Gland and Cable Clamp	C-96
IPT 06 W Straight Plug Connector with Long Backshell and Cable Sealing Gland	C-98
IPT 06 M Straight Plug Connector with Backshell Suitable for EMI Shield Termination and Heat Shrink Boot	C-100
IPT 07 A Rear Box Mount Jam Nut Receptacle Connector	C-102
IPT 07 E Rear Panel Mount Jam Nut Receptacle Connector with Backshell	C-104
IPT 07 E...SR Rear Panel Mount Jam Nut Receptacle Connector and Backshell with Cable Clamp and Bushing	C-106
IPT 07 Y Rear Box Mount Jam Nut Receptacle with Printed Circuit Board Contacts	C-108
IPT 071 YK Rear Box Mount Jam Nut Receptacle with Standoff and Printed Circuit Board Contacts	C-110
IPT 08 AM Plug Connector with 90° Backshell Suitable for MS3057 Cable Clamp	C-112
IPT 08 A...PHM Plug Connector with 90° PHM Backshell and Sleeves to Accomodate Various Cable Sizes	C-114
IPT 08 EM Plug Connector with 90° Backshell for MS3057-A Cable Clamp	C-116
IPT 08 M Plug Connector with 90° Backshell for Shield Termination and Shrink Boot	C-118
IPT 26 A Panel Plug Connector	C-120

© 2015 Glenair, Inc. U.S. CAGE Code 06324 Printed in Italy

Downloaded from Arrow.com.

Series IPT SE and IPT Connector Accessories and Tools

IPT Bayonet Lock Tools and Accessories Overview	D-1
IT 3057-A Cable Clamp	D-2
IT 3057-C Cable Clamp	D-3
IT 3420 and IT 3420-A Neoprene Sleeve	D-4
IPT 3180-C and IPT 3180-CF Protective Plug Covers	D-5
IPT 3181-C and IPT 3181-CF Protective Receptacle Covers	D-6
IPT 3181-N and IPT 3181-NF Protective Jam Nut Receptacle Covers	D-7
IT 90376-R and IT 90376-Y Protective Receptacle and Plug Plastic Caps	D-8
IPT 3115 and IPT 3115A Dummy Stowage Receptacles	D-9
10-101949 and 10-101949-S Square Flange Panel Mount Receptacle Sealing Gaskets	D-10
Sealing Plug for Wire Sealing Grommet	D-11
IPT Series Tools	D-12

© 2015 Glenair, Inc. U.S. CAGE Code 06324 Printed in Italy

Downloaded from Arrow.com.

INNOVATION

Performance • Durability • Ease of Use

POWER TRIP

ITS power

Geo-Marine®

Band-Master™ ATS

Well-Master™ 260°

Octobyte

SAV-CON®
CONNECTOR SAVERS

HiPer D MIL 24308™

ARMORLITE™

GUARDIAN

GLASS-SEALED Hermetic CONNECTORS

SUPERSEAL™

This special industrial-strength capability guide provides a comprehensive overview of Glenair's "no gap" family of interconnect solutions for rugged industrial, rail, geophysical and power industry applications. No other interconnect manufacturer in the world offers such a broad range of connectors, backshells, wire protection conduit, shrink boots, tools and more for harsh-environment industrial applications. All our solutions are backed with our high availability customer service model, which includes in-stock inventory for thousands of critical part numbers, no dollar or quantity minimum orders, free samples upon request, free engineering and application development and more. Contact the factory or our industrial/rail product team for application engineering assistance.

Downloaded from Arrow.com.

Why CHOOSE Glenair?

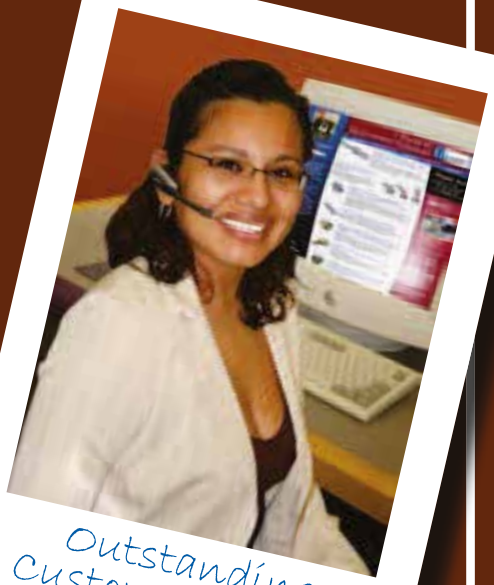

Outstanding Customer Service!

Plenty of Raw Materials!

In-House Assembly!

Abundant Machining Capacity!

Huge "Same-Day" Inventory!

Glenair®

Downloaded from Arrow.com.

Out of This World

INTERCONNECT SOLUTIONS

Glenair, Inc.
1211 Air Way • Glendale, California • 91201-2497
Telephone: 818-247-6000 • Fax: 818-500-9912 • sales@glenair.com
www.glenair.com

Glenair Power Products Group
860 N. Main Street Extension
Wallingford, CT
06492
Telephone: 203-741-1115
Facsimile: 203-741-0053
sales@glenair.com

Glenair Microway Systems
7000 North Lawndale Avenue
Lincolnwood, IL
60712
Telephone: 847-679-8833
Facsimile: 847-679-8849

Glenair Electric GmbH
Schaberweg 28
61348 Bad Homburg
Germany
Telephone: 06172 / 68 16 0
Facsimile: 06172 / 68 16 90
germany@glenair.com

Glenair Italia S.p.A.
Via Del Lavoro, 7
40057 Quarto Inferiore –
Granarolo dell'Emilia
Bologna, Italy
Telephone: +39-051-782811
Facsimile: +39-051-782259
info@glenair.it

Glenair Korea
B-1304 Gunpo IT Valley
148 Gosan-Ro, Gunpo-Si
Kyunggi-Do, Korea
435-733
Telephone: +82-31-8068-1090
Facsimile: +82-31-8068-1092
sales@glenair.kr

Glenair UK Ltd
40 Lower Oakham Way
Oakham Business Park
P.O. Box 37, Mansfield
Notts, NG18 5BY England
Telephone: +44-1623-638100
Facsimile: +44-1623-638111
sales@glenair.co.uk

Glenair Nordic AB
Gustav III : S Boulevard 46
SE-169 27 Solna
Sweden
Telephone: +46-8-50550000
sales@glenair.se

Glenair Iberica
C/ La Vega, 16
45612 Velada
Spain
Telephone: +34-925-89-29-88
Facsimile: +34-925-89-29-87
sales@glenair.es

Glenair France SARL
7, Avenue Parmentier
Immeuble Central Parc #2
31200 Toulouse
France
Telephone: +33-5-34-40-97-40
Facsimile: +33-5-61-47-86-10
sales@glenair.fr

© 2015 Glenair, Inc.

Printed in Italy

Downloaded from Arrow.com.