SKKE 310F

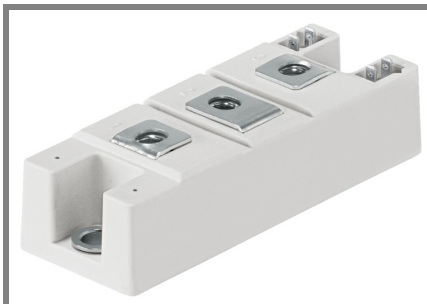

SEMIPACK® 2

Fast Diode Module

SKKE 310F

Features

- CAL (controlled axial lifetime) technology, patent No. DE 43 10 44
- Heat transfer through ceramic isolated metal baseplate
- Very short recovery times
- Soft recovery
- Low switching losses

Typical Applications*

- Self-commutated inverters
- DC choppers
- AC motor speed control
- Inductive heating
- Uninterruptible power supplies
- Electronic welders
- General power switching applications

SKKE

V_{RSM} V	V_{RRM} V	I_{FRMS} = 455 A (maximum value for continuous operation) I_{FAV} = 310 A (sin. 180; 50Hz; T_c = 84 °C)		
1200	1200	SKKE 310F12		

Symbol	Conditions	Values	Units
I_{FAV}	sin. 180; T_c = 85 (100) °C	308 (260)	A
I_{FSM}	T_{vj} = 25 °C; 10 ms	6500	A
	T_{vj} = 150 °C; 10 ms	5500	A
i²t	T_{vj} = 25 °C; 8,3 ... 10 ms	211000	A²s
	T_{vj} = 150 °C; 8,3 ... 10 ms	151000	A²s
V_F	T_{vj} = 25 °C; I_F = 400 A	max. 2,1	V
$V_{(TO)}$	T_{vj} = 150 °C	max. 1,2	V
r_T	T_{vj} = 150 °C	max. 1,9	mΩ
I_{RD}	T_{vj} = 25 °C; V_{RD} = V_{RRM}	max. 2	mA
I_{RD}	T_{vj} = 150 °C; V_{RD} = V_{RRM}	max. 60	mA
Q_{rr}	T_{vj} = 125 °C, I_F = 400 A,	58	µC
I_{RM}	-di/dt = 4000 A/µs, V_R = 600 V	400	A
t_{rr}		370	ns
E_{rr}		22	mJ
$R_{th(j-c)}$		0,08	K/W
$R_{th(c-s)}$		0,05	K/W
T_{vj}		-40 ... +150	°C
T_{stg}		-40 ... +125	°C
V_{isol}	a. c. 50 Hz; r.m.s.; 1 s / 1 min.	3600 / 3000	V~
M_s	to heatsink	5 ± 15%	Nm
M_t	to terminals	5 ± 15%	Nm
a		5 * 9,81	m/s²
m	approx.	250	g
Case		A 54	

© by Semikron Danfoss

Downloaded from Arrow.com.

Dimensions in mm
General tolerance ±0.5 mm

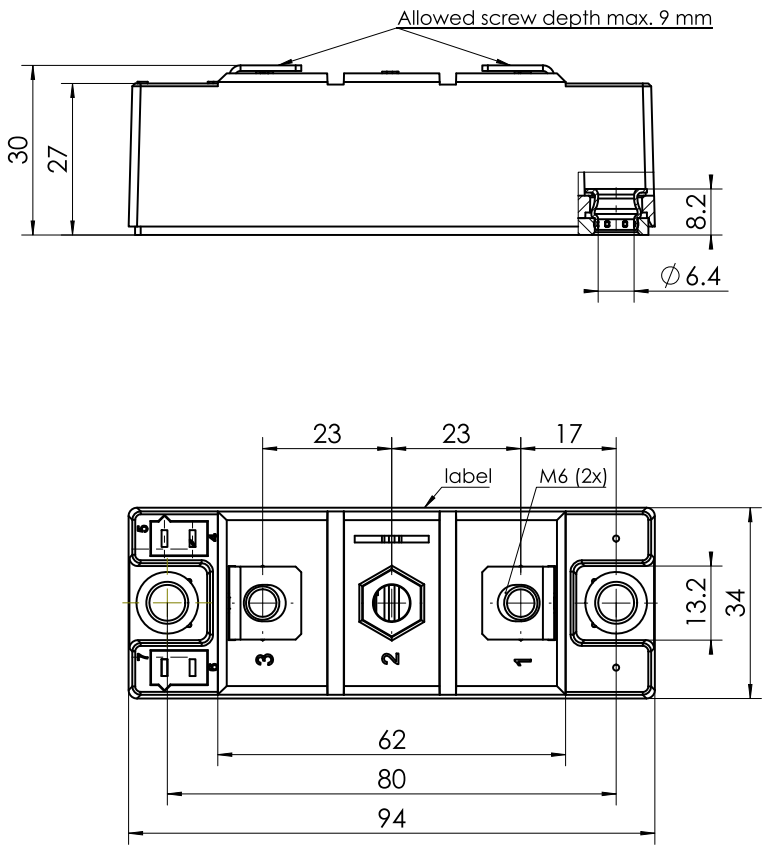

SEMIPACK 2

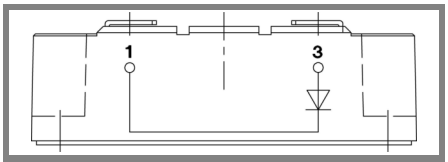

Case A 54 SKKE

IMPORTANT INFORMATION AND WARNINGS

This is an electrostatic discharge sensitive device (ESDS) according to international standard IEC 61340.

*The specifications of Semikron Danfoss products may not be considered as any guarantee or assurance of product characteristics ("Beschaffenheitsgarantie"). The specifications of Semikron Danfoss products describe only the usual characteristics of Semikron Danfoss products to be expected in typical applications, which may still vary depending on the specific application. Therefore, products must be tested for the respective application in advance. Resulting from this, application adjustments of any kind may be necessary. Any user of Semikron Danfoss products is responsible for the safety of their applications embedding Semikron Danfoss products and must take adequate safety measures to prevent the applications from causing any physical injury, fire or other problem, also if any Semikron Danfoss product becomes faulty. Any user is responsible for making sure that the application design and realization are compliant with all laws, regulations, norms and standards applicable to the scope of application. Unless otherwise explicitly approved by Semikron Danfoss in a written document signed by authorized representatives of Semikron Danfoss, Semikron Danfoss products may not be used in any applications where a failure of the product or any consequences of the use thereof can reasonably be expected to result in personal injury. No representation or warranty is given and no liability is assumed with respect to the accuracy, completeness and/or use of any information herein, including without limitation, warranties of non-infringement of intellectual property rights of any third party. Semikron Danfoss does not convey any license under its or a third party's patent rights, copyrights, trade secrets or other intellectual property rights, neither does it make any representation or warranty of non-infringement of intellectual property rights of any third party which may arise from a user's applications.

 © by Semikron Danfoss

Downloaded from Arrow.com.