Product data sheet
Miniature connectors

Product description	**M16 Male angled connector, Contacts: 19 (19-a), 6.0-8.0 mm, shieldable, solder, IP67, UL 2238**
Area	**M16 IP67**
Series	**423**
Part no.	**99 5661 75 19**

Illustration (may vary)



Scale drawing

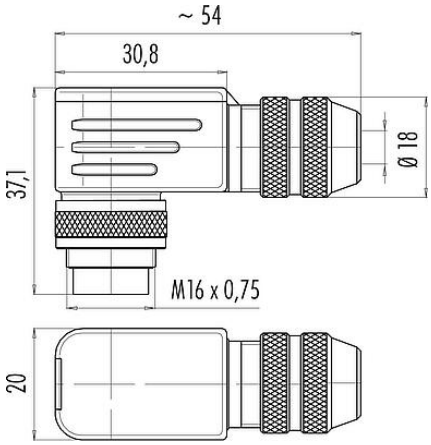

Contact arrangement (Plug-in side)

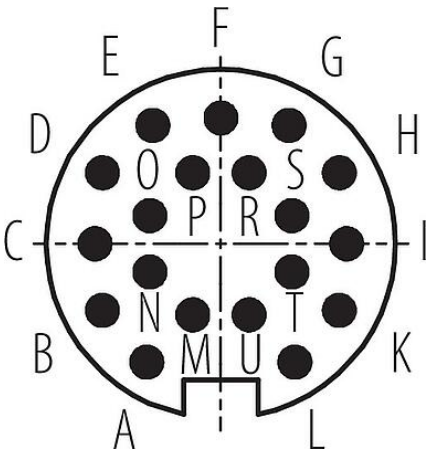

You can find the assembly instructions on the next page.

Technical data

General features

Part no.	99 5661 75 19
Connector design	Male angled connector
Type standard	DIN EN 61076-2-106
Version	Connector pin angled
Connector locking system	screw
Termination	solder
Degree of protection	IP67
Connection cross-section	max. 0.25 mm² / AWG 24
Cable outlet	6.0-8.0 mm
Twistability	90° (4 coding options)
Temperature range from/to	-30 °C / 95 °C
Mechanical operation	> 500 Mating cycles
Weight (g)	59.72
Customs tariff number	85369010
Country of Origin	DE

Electrical parameters

Rated voltage	60 V
Rated impulse voltage	500 V
Rated current	3,0 A
Insulation resistance	≥ 10^{10} Ω
Pollution degree	1
Overvoltage category	I

Downloaded from Arrow.com.

Product data sheet

Miniature connectors

Product description	**M16 Male angled connector, Contacts: 19 (19-a), 6.0-8.0 mm, shieldable, solder, IP67, UL 2238**
Area	**M16 IP67**
Series	**423**
Part no.	**99 5661 75 19**

Insulating material group	III
EMC compliance	shieldable
Shield connection	Shielding ring

Material

Housing material	CuZn (Brass nickel plated)
Contact body material	PBT (UL94 V-0)
Contact material	CuZn (brass)
Contact plating	Au (gold)
REACH SVHC	CAS 7439-92-1 (Lead)
SCIP number	602ce38f-87f3-40ba-8871-89f49c18630a

Authorization/approvals

Approvals	UL 2238

Classifications

eCl@ss 11.1	27-44-01-02
ETIM 9.0	EC002635

Declarations of conformity

Low Voltage Directive	EN 60529:1991 | EN 60204-1:2018

Trade-Compliance

Copper (9903.78.01)	0.000321 kg

Downloaded from Arrow.com.

Product data sheet
Miniature connectors

Product description	**M16 Male angled connector, Contacts: 19 (19-a), 6.0-8.0 mm, shieldable, solder, IP67, UL 2238**
Area	**M16 IP67**
Series	**423**
Part no.	**99 5661 75 19**

Assembly instructions

1. Bead parts.
2. Dismantle cable to 40 mm length.
3. Strip single wires, shorten shield and thread wires through housing.
4. Solder single wires, fit o-ring on twist sleeve and mount contact insert and twist sleeve.
5. Pull back cable, revert shield on shielding ring, mount shielding ring, seal and pinch ring.
6. Mount distance sleeve, mount seal to cover, insert cover and turn on pressing screw to fix the cable.

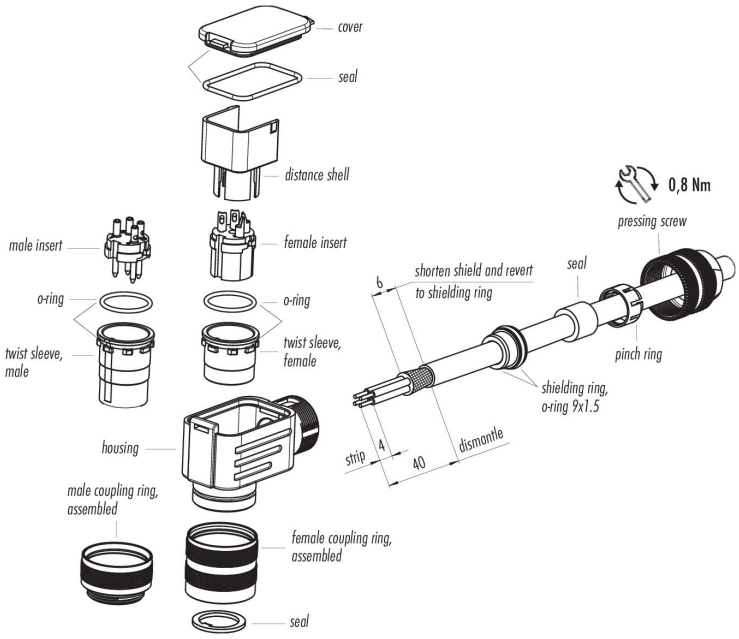

Date: 11.09.2026

Downloaded from Arrow.com.

Product data sheet
Miniature connectors

Product description	**M16 Male angled connector, Contacts: 19 (19-a), 6.0-8.0 mm, shieldable, solder, IP67, UL 2238**
Area	**M16 IP67**
Series	**423**
Part no.	**99 5661 75 19**

Security notices

The connector must not be plugged or unplugged under load. Non-observance and improper use can result in personal injury.

The connectors have been developed for applications in plant engineering, control and electrical equipment construction. The user is responsible for checking whether the connectors can also be used in other areas of application.

To protect against unintentional opening of the connector, the thread between the housing and the connector head must be secured with a suitable cyanoacrylate adhesive when used in circuits with voltages dangerous to the touch. This does not apply to connectors used in SELV and PELV circuits according to IEC 61140 (EN 61140, VDE 0140-1).

Connectors which are used in circuits with voltages dangerous to the touch may only be installed and used by, or under the supervision of, persons with electrical engineering training, taking into account the applicable regulations and standards.

The user must take suitable safety precautions to ensure that the connector cannot be accidentally disconnected.

Plug connectors with enclosure protection IP67 and IP68 are not suitable for use under water. When used outdoors, the plug connectors must be protected separately against corrosion. For further information on the IP protection classes, please refer to the "Technical Information" download centre.

Please observe the pollution degree and the overvoltage category. For further information, please refer to the download center "Technical Information".

To lock the cable connector with the device connector, the threaded ring is tightened "hand-tight" (approx. 60 cNm).

Downloaded from Arrow.com.