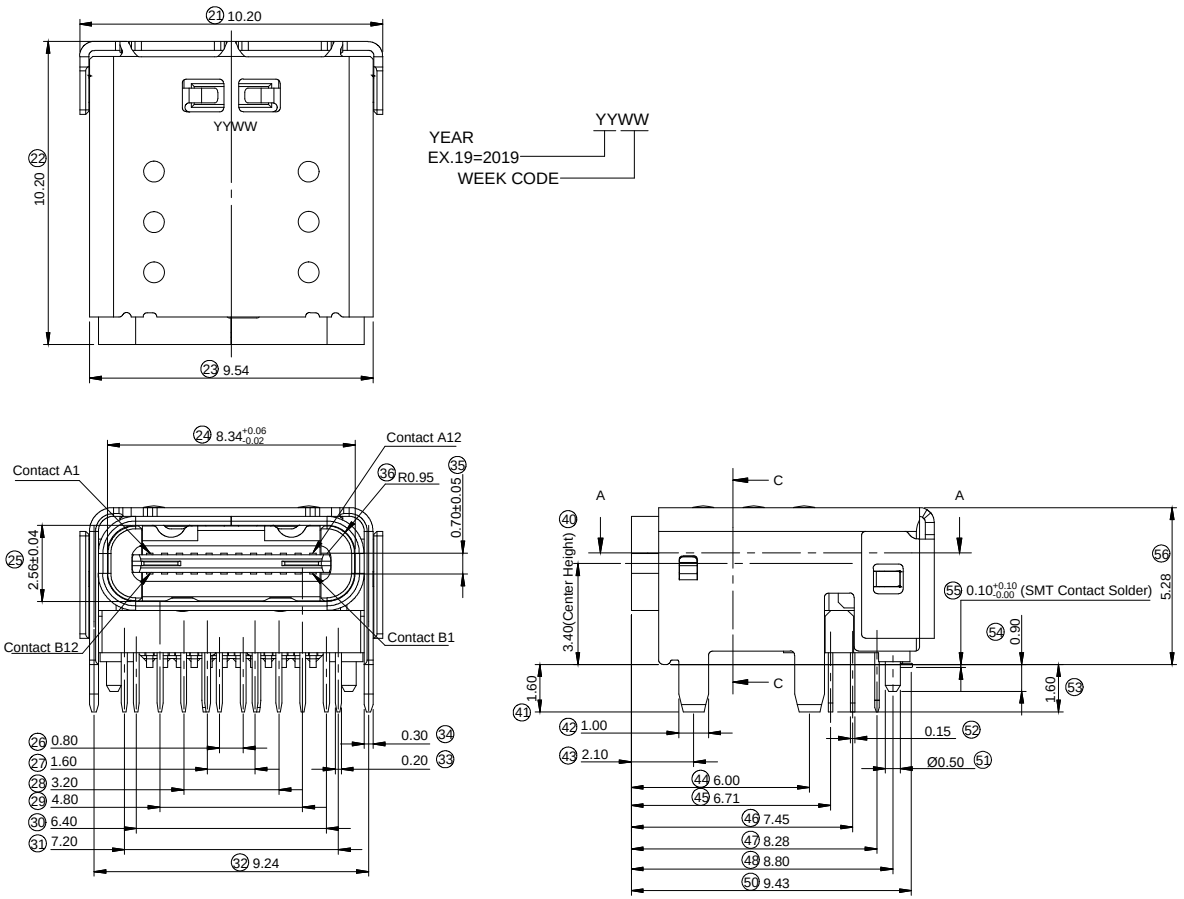

SPECIFICATION

MATERIAL
INSULATOR: THERMOPLASTIC,BLACK RATED UL94V-0
CONTACTS: COPPER ALLOY
SHELL: STAINLESS STEEL

CONTACT PLATING
UNDERPLATE: 50u" ~80u" Nickel
CONTACT AREA: 30u" gold
SOLDER TAILS AREA: 100u" ~150u" Tin(matte)

ELECTRICAL
OPERATION VOLTAGE: 20V
CURRENT RATING: 7A MAX
CONTACT RESISTANCE: 40 mΩ initial
INSULATION RESISTANCE: 100 MΩ MIN@100VDC
DIELECTRIC WITHSTANDING VOLTAGE: 100 VAC /MINUTE

TEMPERATURE RANGE:-20 °C TO +105 °C
MATING CYCLES: 10000 INSERTIONS
CONNECTOR IS FULLY COMPATIBLE WITH USB TYPE C 3.1 Gen2 CONNECTOR SPEC.

RoHS compliant

Unit:mm

Scale	Free
TOLERANCE	
X.	±0.50
X.X	±0.30
X.XX	±0.20
DIM	TOL
X.°	±5°
Angle	TOL

Id.	Modification	Date	Name
0	Drawn	02.09.2021	Luca

	Date	Name
Drawn	02.09.2021	Luca
Approved	02.09.2021	Luca

Description: USB CONNECTOR
USB C Type / USB4 Gen3x2 / Female

ASSMANN WSW-No.
A-USB1-DFN-EA-HRR1

Drawing-No.
ASS 9023 CO

rev00

Customer-No.

SHEET
1 / 3

CON1504

Downloaded from Arrow.com.

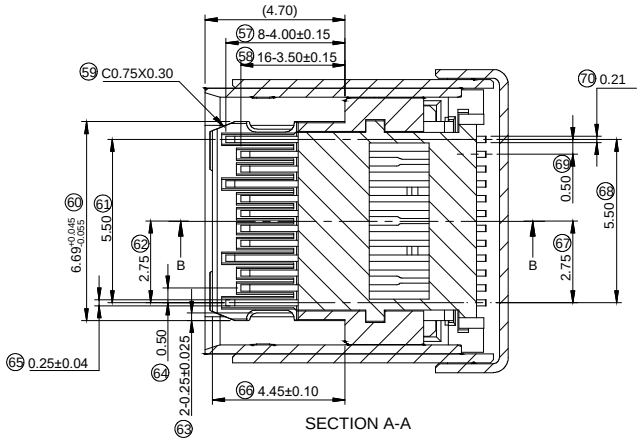

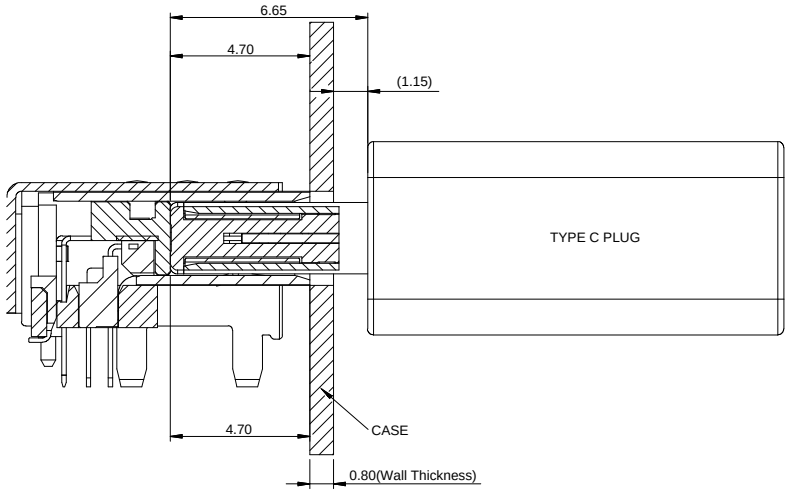

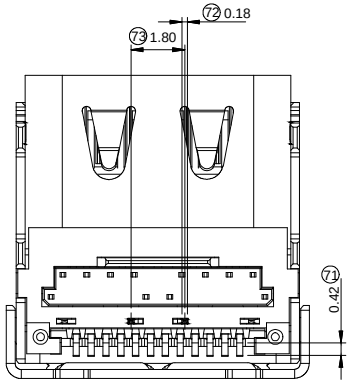

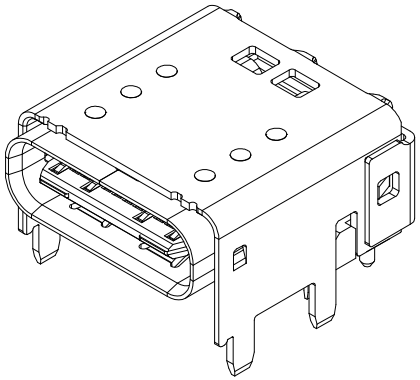

RoHS compliant

Unit:mm

Scale	Free
TOLERANCE	
X.	±0.50
X.X	±0.30
X.XX	±0.20
DIM	TOL
X.°	±5°
Angle	TOL

Id.	Modification	Date	Name
0	Drawn	02.09.2021	Luca

	Date	Name
Drawn	02.09.2021	Luca
Approved	02.09.2021	Luca

ASSMANN WSW components

Description: USB CONNECTOR

USB C Type / USB4 Gen3x2 / Female

ASSMANN WSW-No.

A-USB1-DFN-EA-HRR1

Drawing-No.

ASS 9023 CO

rev00

Customer-No.

SHEET 2 / 3

CON1504

Downloaded from Arrow.com.

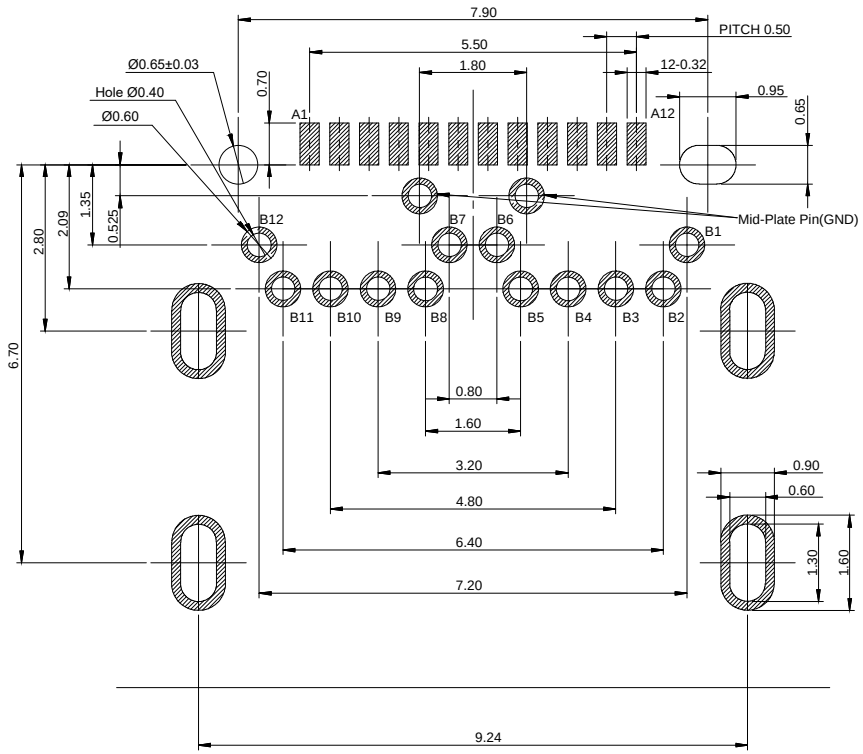

RECOMMENDED PCB LAYOUT
TOLERANCE ±0.05
PCB THICKNESS =1.6 SOLDER TAIL

USB TYPE–C Pin Assignments

Pin Number	Signal Name	Pin Number	Signal Name
A1	GND	B12	GND
A2	SSTXp1	B11	SSRXp1
A3	SSTXn1	B10	SSRXn1
A4	VBUS	B9	VBUS
A5	CC1	B8	SBU2
A6	Dp1	B7	Dn2
A7	Dn1	B6	Dp2
A8	SBU1	B5	CC2
A9	VBUS	B4	VBUS
A10	SSRXn2	B3	SSTXn2
A11	SSRXp2	B2	SSTXp2
A12	GND	B1	GND

RoHS compliant

Unit:mm

Scale	Free
TOLERANCE	
X.	±0.50
X.X	±0.30
X.XX	±0.20
DIM	TOL
X.°	±5°
Angle	TOL

Id.	Modification	Date	Name
0	Drawn	02.09.2021	Luca

	Date	Name
Drawn	02.09.2021	Luca
Approved	02.09.2021	Luca

Description: USB CONNECTOR
USB C Type / USB4 Gen3x2 / Female

ASSMANN WSW-No.
A-USB1-DFN-EA-HRR1

Drawing-No.
ASS 9023 CO

rev00

Customer-No.

SHEET 3 / 3

CON1504

Downloaded from Arrow.com.