THIS DRAWING IS UNPUBLISHED. RELEASED FOR PUBLICATION -
© COPYRIGHT 20 BY - ALL RIGHTS RESERVED.

LOC	DIST
CM	53

REVISIONS

P	LTR	DESCRIPTION	DATE	DWN	APVD
	H3	REVISED PER ECO-11-025415	20DEC11	JR	TM
	H4	ECO-19-006909	03MAY2019	AP	WS
	J	REVISED PER ECN-25-313010	27MAR2025	WLS	JP

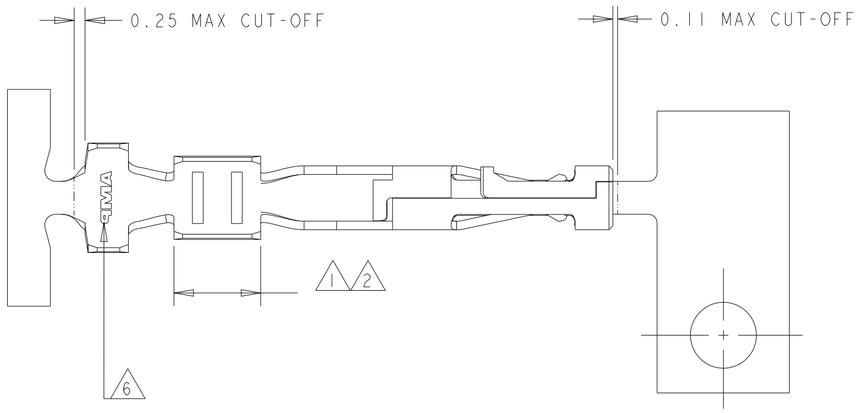

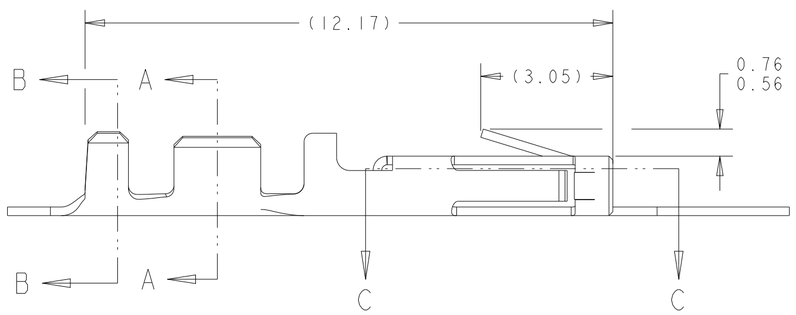

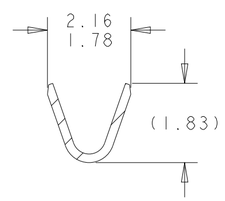

SECTION A-A

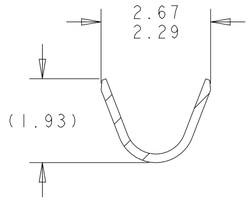

SECTION B-B

1. BRIGHT TIN IN THE CRIMP AREA, OVER NICKEL PLATE,
   0.76µm MIN. THK. GOLD STRIPE,
   OR
   0.0762µm MIN. THK. GOLD FLASH OVER 0.69µm MIN. THK. PALLADIUM NICKEL
   IN THE GOLD STRIPE AREA PER TE CONNECTIVITY'S DISCRETION.
2. BRIGHT TIN IN THE CRIMP AREA, OVER NICKEL PLATE,
   0.38µm MIN. THK. GOLD STRIPE,
   OR
   0.0762µm MIN. THK. GOLD FLASH OVER 0.31µm MIN. THK. PALLADIUM NICKEL
   IN THE GOLD STRIPE AREA PER TE CONNECTIVITY'S DISCRETION.
3. 1.5 - 4.0µm THK. BRIGHT TIN.
4. WIRE RANGE: 20 - 24 AWG.
5. INSULATION RANGE: 0.89 - 1.524 mm.
6. AMP LOGO LOCATED APPROXIMATELY AS SHOWN.
7. 0.76µm MIN. THK. GOLD STRIPE IN THE GOLD PLATE AREA,
   BRIGHT TIN-LEAD IN THE CRIMP AREA, OVER NICKEL PLATE.
8. 0.38µm MIN. THK. GOLD STRIPE IN THE GOLD PLATE AREA,
   BRIGHT TIN-LEAD IN THE CRIMP AREA, OVER NICKEL PLATE.
9. 1.02µm MIN. THK. GOLD STRIPE IN THE GOLD PLATE AREA,
   BRIGHT TIN IN THE CRIMP AREA, OVER NICKEL PLATE.

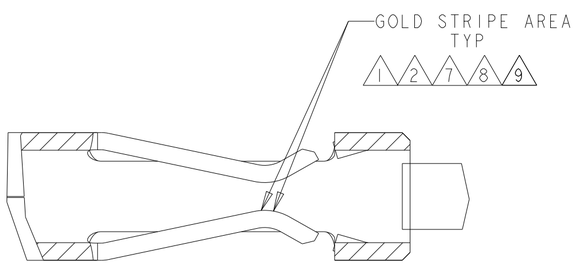

SECTION C-C
SCALE 20:1

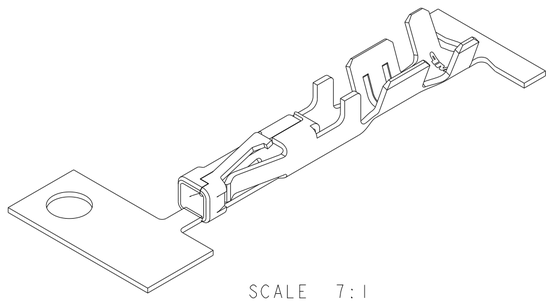

SCALE 7:1

9	1-794606-3
1	1-794606-2
2	1-794606-1
7	794606-3
8	794606-2
3	794606-1
FINISH	PART NUMBER

THIS DRAWING IS A CONTROLLED DOCUMENT.

DIMENSIONS: mm

TOLERANCES UNLESS OTHERWISE SPECIFIED:
0 PLC ±-
1 PLC ±-
2 PLC ±0.20
3 PLC ±-
4 PLC ±-
ANGLES ±1°

MATERIAL: 0.2 PH BRZ
FINISH: SEE TABLE

METRIC

DWN K. WHITAKER 12-OCT-1999
CHK K. COBLE 12-OCT-1999
APVD K. COBLE 12-OCT-1999
PRODUCT SPEC 108-1836
APPLICATION SPEC 114-13000
WEIGHT -

TE Connectivity

NAME: CONTACT, RECEPTACLE, CRIMP, SNAP-IN, MICRO MATE-N-LOK(TM)

SIZE A2 | CAGE CODE 00779 | DRAWING NO C-794606 | RESTRICTED TO -

CUSTOMER DRAWING | SCALE 10:1 | SHEET 1 OF 1 | REV J

794606

1471-9 (3/11)

Downloaded from Arrow.com.