SDC15
TVS Diode Array for ESD Protection of 12V Data and Power Lines

PROTECTION PRODUCTS

Description

The SDC15 transient voltage suppressor (TVS) is designed to protect components which are connected to data and transmission lines from voltage surges caused by electrostatic discharge **(ESD)**, electrical fast transients **(EFT)** , and **lightning**.

TVS diodes are characterized by their high surge capability, low operating and clamping voltages, and fast response time. This makes them ideal for use as board level protection of sensitive semiconductor components. The dual-junction common-cathode design allows the user to protect one data or power line operating at ±12 volts. The low profile SOT23 package allows flexibility in the design of "crowded" circuit boards.

The SDC15 TVS will meet the surge requirements of IEC 61000-4-2 (Formerly IEC 801-2), Level 4, "Human Body Model" for air and contact discharge.

Features

- 300 watts peak pulse power (t_p = 8/20µs)
- 40 watts peak pulse power (t_p = 10/1000µs)
- Transient protection for data and power lines to
  IEC 61000-4-2 (ESD) ±15kV (air), ±8kV (contact)
  IEC 61000-4-4 (EFT) 40A (5/50ns)
  IEC 61000-4-5 (Lightning) 12A (1.2/50µs)
- Protects one bidirectional line
- Low clamping voltage
- Low leakage current
- High surge capability
- Solid-state silicon avalanche technology

Mechanical Characteristics

- JEDEC SOT23 package
- Molding compound flammability rating: UL 94V-0
- Marking : DC15
- Packaging : Tape and Reel per EIA 481

Applications

- RS-232 Data Lines
- Portable Electronics
- Industrial Controls
- Set-Top Box
- Servers, Notebook, and Desktop PC
- 12V DC Supply Protection

Circuit Diagram

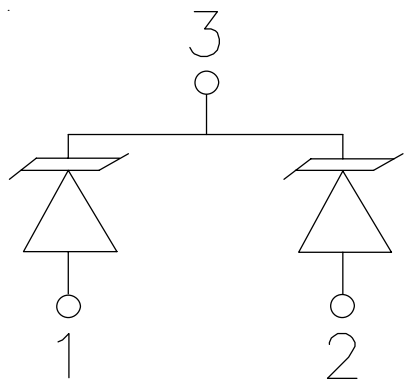

Schematic & PIN Configuration

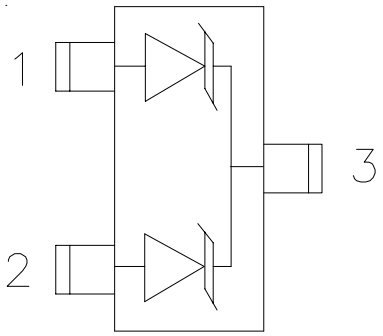

SOT23 (Top View)

Downloaded from Arrow.com.

Absolute Maximum Rating

Rating	Symbol	Value	Units
Peak Pulse Power (tp = 8/20µs)	P_{pk}	300	Watts
Peak Pulse Current (tp = 8/20µs)	I_{PP}	10	A
Non-Repetitive Peak Forward Current (tp=100µs)	I_{FSMAX}	4	A
Thermal Resistance, Junction to Ambient	θ_{JA}	556	°C/W
Lead Soldering Temperature	T_L	260 (10 sec.)	°C
Operating Temperature	T_J	-55 to +125	°C
Storage Temperature	T_{STG}	-55 to +150	°C

Electrical Characteristics

SDC15

Parameter	Symbol	Conditions	Minimum	Typical	Maximum	Units
Reverse Stand-Off Voltage	V_{RWM}				12.8	V
Reverse Breakdown Voltage	V_{BR}	I_t= 1mA, Between Pin 1 and 2 (each direction)	14.3		16.4	V
Reverse Leakage Current	I_R	V_{RWM} = 12.8V, T=25°C Between Pin 1 and 2 (each direction)			100	nA
Forward Voltage	V_F	I_F= 100mA, Pin 1 to 3 and Pin 2 to 3			1.3	V
Temperature Coefficient of VBR	αVBR				12	mV/°C
Clamping Voltage	V_C	I_{PP} = 1.9A, tp = 10/10000µs Between Pin 1 and 2 (each direction)			21.2	V
Junction Capacitance	C_j	V_R = 0V, f = 1MHz Pin 1 to 2			120	pF

Downloaded from Arrow.com.

Typical Characteristics

Non-Repetitive Peak Pulse Power vs. Pulse Time

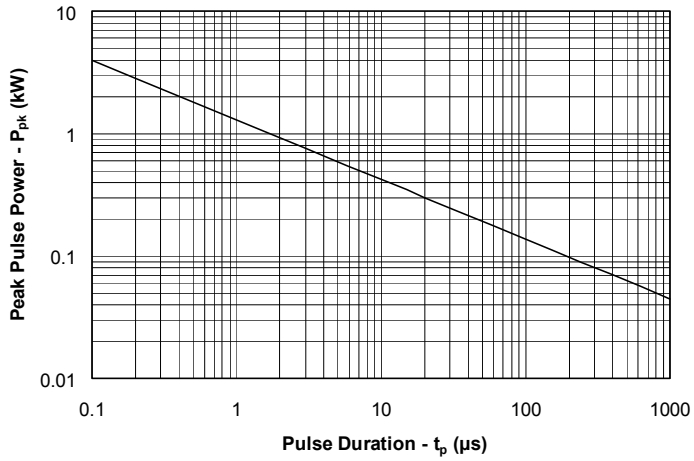

Power Derating Curve

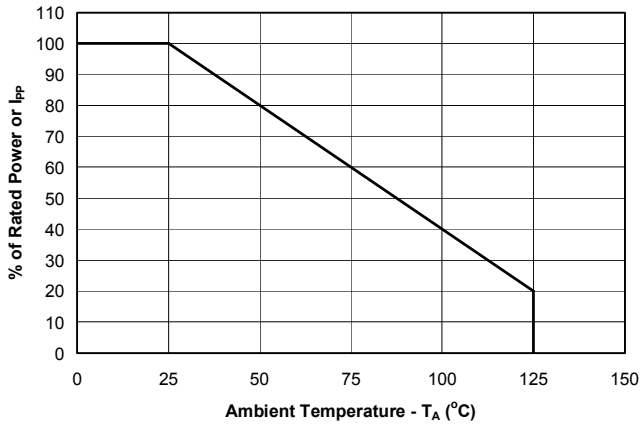

Pulse Waveform

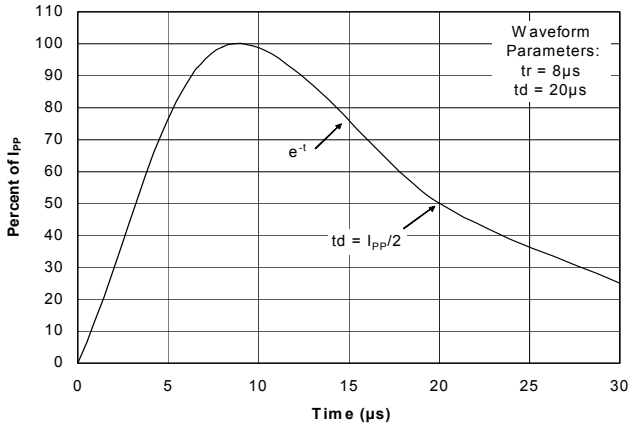

Clamping Voltage vs. Peak Pulse Current

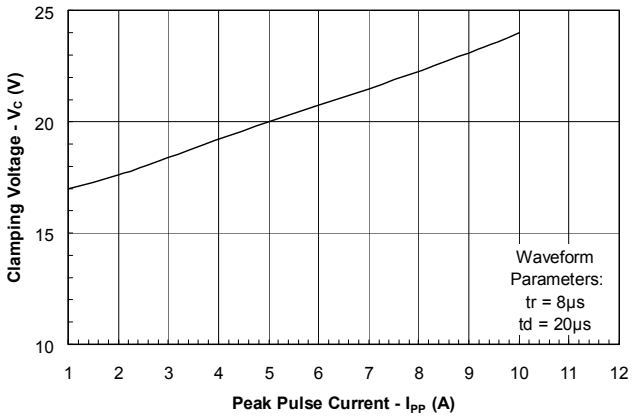

Forward Voltage vs. Forward Current

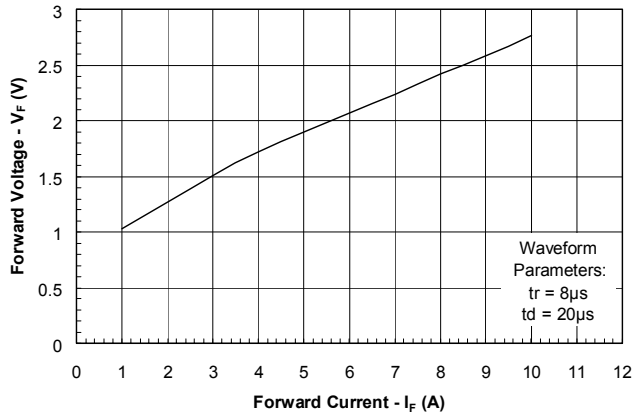

Downloaded from Arrow.com.

Applications Information

Device Connection for Protection of One Data Line

The SDC15 is designed to protect one data or I/O line operating at ±12 volts. Connection options are as follows:

- Common mode protection: Pin 1 is connected to the data line and pin 2 is connected to ground. For best results, this pin should be connected directly to a ground plane on the board. The path length should be kept as short as possible to minimize parasitic inductance. Pin 3 is not connected.
- Differential protection: Pin 1 is connected to one line and pin 2 is connected to the second line. Pin 3 is not connected.

Circuit Board Layout Recommendations for Suppression of ESD.

Good circuit board layout is critical for the suppression of fast rise-time transients such as ESD. The following guidelines are recommended:

- Place the SDC15 near the input terminals or connectors to restrict transient coupling.
- Minimize the path length between the SDC15 and the protected line.
- Minimize all conductive loops including power and ground loops.
- The ESD transient return path to ground should be kept as short as possible.
- Never run critical signals near board edges.
- Use ground planes whenever possible.

Matte Tin Lead Finish

Matte tin has become the industry standard lead-free replacement for SnPb lead finishes. A matte tin finish is composed of 100% tin solder with large grains. Since the solder volume on the leads is small compared to the solder paste volume that is placed on the land pattern of the PCB, the reflow profile will be determined by the requirements of the solder paste. Therefore, these devices are compatible with both lead-free and SnPb assembly techniques. In addition, unlike other lead-free compositions, matte tin does not have any added alloys that can cause degradation of the solder joint.

Device Schematic and Pin Configuration

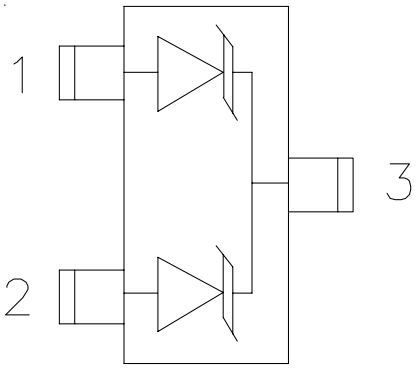

RS-232 Transceiver Protection Example

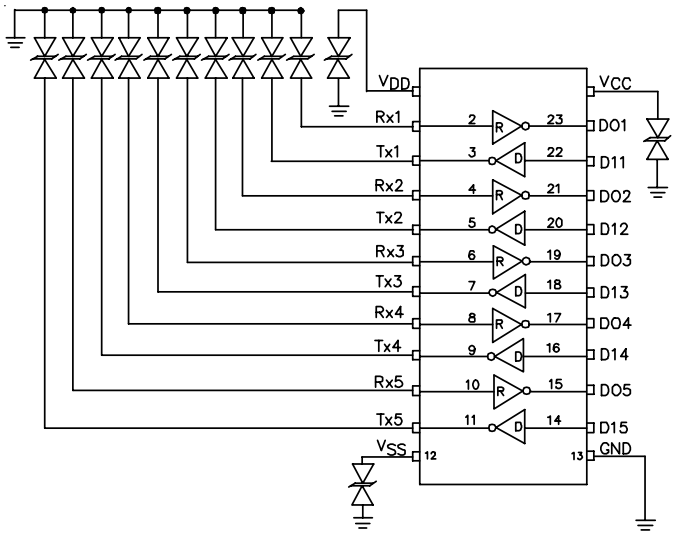

Downloaded from Arrow.com.

PROTECTION PRODUCTS

Outline Drawing - SOT23

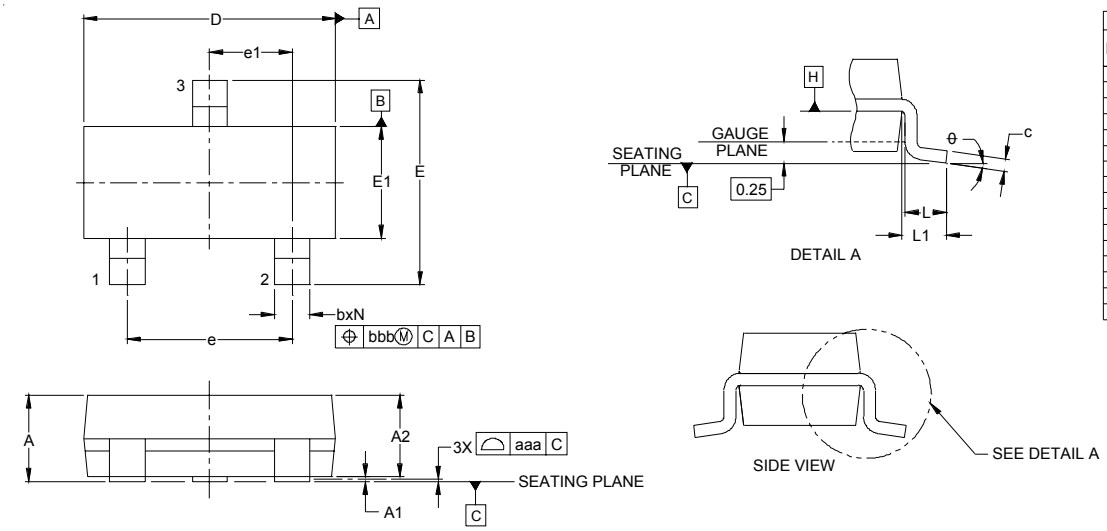

DIM	DIMENSIONS					
	INCHES			MILLIMETERS		
	MIN	NOM	MAX	MIN	NOM	MAX
A	.035	-	.044	0.89	-	1.12
A1	.000	-	.004	0.01	-	0.10
A2	.035	.037	.040	0.88	0.95	1.02
b	.012	-	.020	0.30	-	0.51
c	.003	-	.007	0.08	-	0.18
D	.110	.114	.120	2.80	2.90	3.04
E	.082	.093	.104	2.10	2.37	2.64
E1	.047	.051	.055	1.20	1.30	1.40
e	.075			1.90 BSC		
e1	.037			0.95 BSC		
L	.015	.020	.024	0.40	0.50	0.60
L1	.022			(0.55)		
N	3			3		
θ	0°	-	8°	0°	-	8°
aaa	.004			0.10		
bbb	.008			0.20		

NOTES:
1. CONTROLLING DIMENSIONS ARE IN MILLIMETERS (ANGLES IN DEGREES).
2. DATUMS -A- AND -B- TO BE DETERMINED AT DATUM PLANE -H-
3. DIMENSIONS "E1" AND "D" DO NOT INCLUDE MOLD FLASH, PROTRUSIONS OR GATE BURRS.

Land Pattern - SOT23

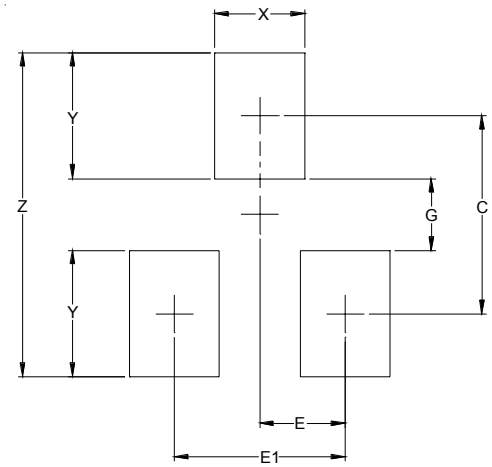

DIM	DIMENSIONS	
	INCHES	MILLIMETERS
C	(.087)	(2.20)
E	.037	0.95
E1	.075	1.90
G	.031	0.80
X	.039	1.00
Y	.055	1.40
Z	.141	3.60

NOTES:
1. THIS LAND PATTERN IS FOR REFERENCE PURPOSES ONLY CONSULT YOUR MANUFACTURING GROUP TO ENSURE YOUR COMPANY'S MANUFACTURING GUIDELINES ARE MET.
2. REFERENCE IPC-SM-782A.

Note 1 : Grid placement courtyard is 8 x 8 elements (4mm x 4mm) in accordance with the international grid detailed in IEC Publication 97.

Downloaded from Arrow.com.

Ordering Information

Part Number	Lead Finish	Qty per Reel	Reel Size
SDC15.TC	SnPb	3,000	7 Inch
SDC15.TCT	Pb Free	3,000	7 Inch

Contact Information

Semtech Corporation
Protection Products Division
200 Flynn Road, Camarillo, CA 93012
Phone: (805)498-2111 FAX (805)498-3804

Downloaded from Arrow.com.