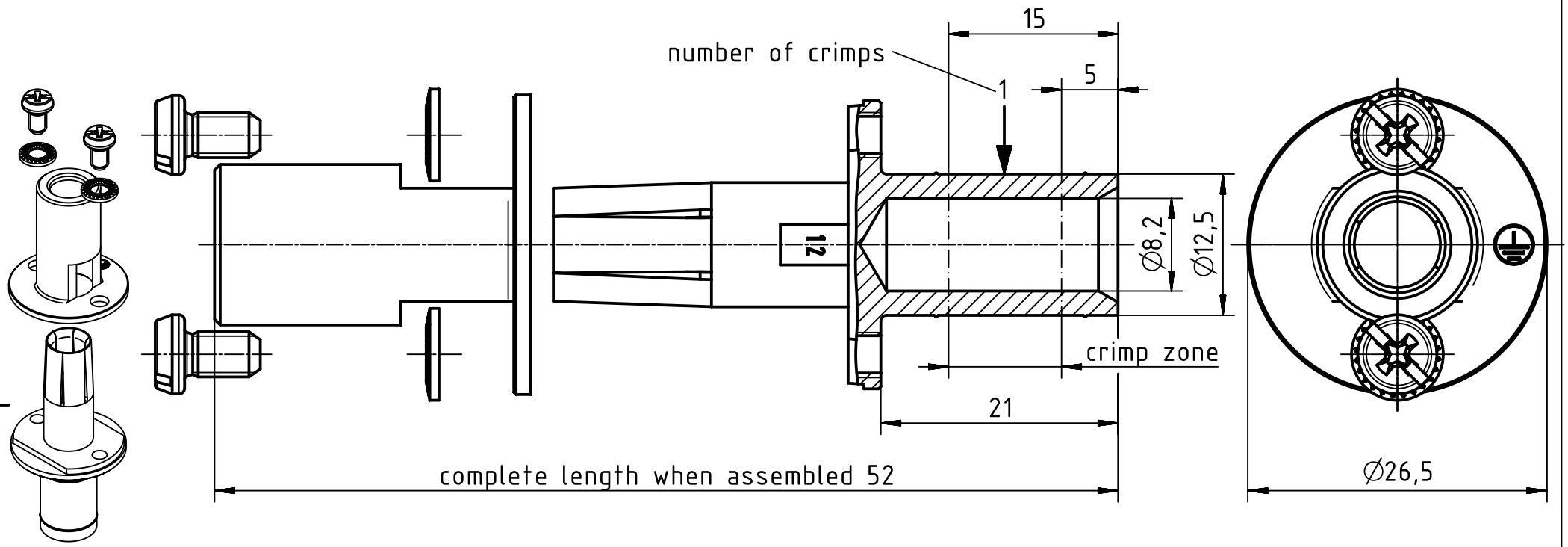

assembly notes see catalog
crimp zone acc. to DIN EN 46235; indicator 12
for stranded fine wire acc. to VDE 0295 class 5/IEC 60228 class 5
wire gauge: 35mm²
stripping length: 20mm

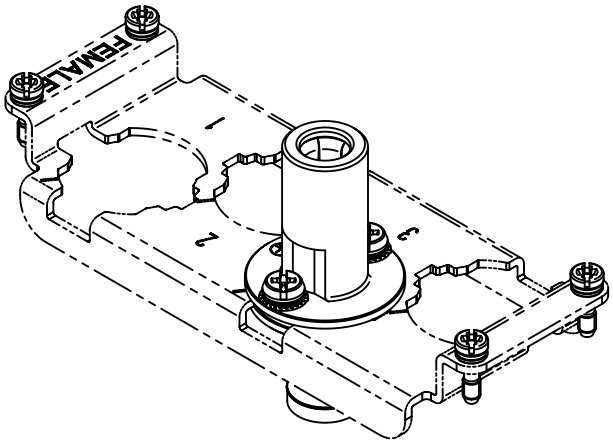

All Dimensions in mm Original Size DIN A4	Scale 2:1	Free size tol.		Ref. Sub.	
All rights reserved Department EL PD - DE	Created by FINKEV	Inspected by SCHNIEDER	Standardisation SCHMIDTM	Date 2015-01-19	State Final Release
HARTING Electric GmbH & Co. KG D-32339 Espelkamp	Title HC250 PE female-contact				Doc-Key / ECM-Nr. 100206434/UGD/004/A 500000083632
	Type TB	Number 09 11 000 6204		Rev. A	Page 1/1

Downloaded from Arrow.com.

A4