STM32WBA5MMG

Datasheet

Bluetooth® LE and IEEE 802.15.4 radio module

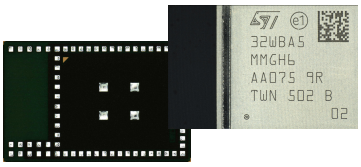

SiP-LGA76 (8 x 12.5 mm)

Product status
STM32WBA5MMG

Features

Includes ST state-of-the-art patented technology.

Core

- Arm® 32-bit Cortex®-M33 CPU with TrustZone® technology, MPU, DSP, and FPU

Bluetooth® LE

- LE 2M
- LE coded
- Direction finding
- LE power control
- Isochronous channels
- Extended advertising
- Periodic advertising
- LE secure connections
- LE audio
- Core specification v6.0

Memories

- 1-Mbyte flash memory with ECC, including 256 Kbytes with 100 kcycles
- 128-Kbyte SRAM, including 64 Kbytes with parity check
- 512-byte (32 rows) OTP

ART Accelerator

- 8-Kbyte instruction cache allowing 0-wait-state execution from flash memory (frequency up to 100 MHz, 150 DMIPS)

Fully integrated BOM including 32 MHz and 32 kHz crystals

Integrated antenna with IPD for best-in-class and reliable antenna matching

- Optional external antenna configuration

Certifications: CE, FCC, ISED, MIC, RoHS, REACH

Planned certifications: KC, NCC, SRRC, ANATEL

Ultra-low-power platform

- 1.71 to 3.6 V power supply
- SMPS and ultra-low-power modes for battery longevity
- -40°C to 85°C temperature range

Supporting:

- Ultra-low-power 2.4 GHz RF transceiver supporting Bluetooth® LE, IEEE 802.15.4 supporting Thread, Matter for Border router, and Zigbee®

Downloaded from Arrow.com.

- Programmable output power up to +10 dBm with 1 dB steps
- Rx sensitivity: -96 dBm (Bluetooth® LE at 1 Mbit/s), -97.5 dBm (IEEE 802.15.4 at 250 kbit/s)
- Up to 33 I/Os (most of them 5 V-tolerant) with interrupt capability

Security and cryptography

- Secure firmware installation (SFI)
- Advanced encryption standards (AES) accelerators
- Public key accelerator (PKA)
- Protection against differential power analysis (DPA)
- HASH hardware accelerator
- True random number generator (RNG)
- 96-bit UID
- CRC calculation unit
- Flash readout and hide protection (RDP and HDP)
- Tamper detection
- Root hardware unique key (RHUK)

Serial wire debug (SWD) and JTAG

Suitable for 2-layer PCB product design

All packages are ECOPACK2 compliant.

Applications

- Home automation
- Wellness, healthcare, personal trackers
- Gaming and toys
- Beacons and accessories
- Industrial

Downloaded from Arrow.com.

1 Introduction

This document provides the ordering information and mechanical device characteristics of the STM32WBA5MMG module. It must be read in conjunction with DS14127, RM0493, and ES0592, available on www.st.com.

The STM32WBA5MMG module is based on the STM32WBA55UG wireless microcontroller, which integrates an Arm® core with the TrustZone® technology.

For information on Arm® Cortex® cores, refer to the relevant Cortex® technical reference manual, available from the www.arm.com website.

For information on Bluetooth® refer to www.bluetooth.com website.

Note: *Arm is a registered trademark of Arm Limited (or its subsidiaries or affiliates) in the US and/or elsewhere.*

Arm and TrustZone are registered trademarks of Arm Limited (or its subsidiaries or affiliates) in the US and/or elsewhere.

The Arm word and logo are trademarks of Arm Limited (or its subsidiaries) in the US and/or elsewhere. All rights reserved.

Reference documents

[1] Reference manual *Multiprotocol wireless Bluetooth® Low-Energy and IEEE802.15.4, STM32WBA5xxx Arm®-based 32-bit MCUs* (RM0493)

[2] STM32WBA5xxx datasheet (DS14127)

[3] STM32WBA5xxx device errata (ES0592)

Downloaded from Arrow.com.

2 Description

The STM32WBA5MMG is an ultra-low-power, small form factor, certified 2.4 GHz wireless module. It supports Bluetooth® LE, Zigbee® 3.0, OpenThread, dynamic and static concurrent modes, and IEEE 802.15.4 proprietary protocols. Based on the STM32WBA55UG wireless microcontroller, it provides best-in-class RF performance thanks to its good receiver sensitivity and a high output power signal. Its low-power features enable extended battery life time, small coin-cell batteries.

The STM32WBA5MMG requires no RF expertise. It is the best way to speed up application development and to reduce the associated costs. The module is completely protocol stack royalty-free.

Downloaded from Arrow.com.

3 Module overview

The module is an SiP-LGA76 package (system in package land grid array) that integrates the proven STM32WBA55UG MCU with several external components. The package includes:

- LSE crystal
- HSE crystal
- passive components for SMPS
- antenna matching and antenna
- IPD for RF matching and harmonics rejection

Figure 1. STM32WBA5MMG block diagram

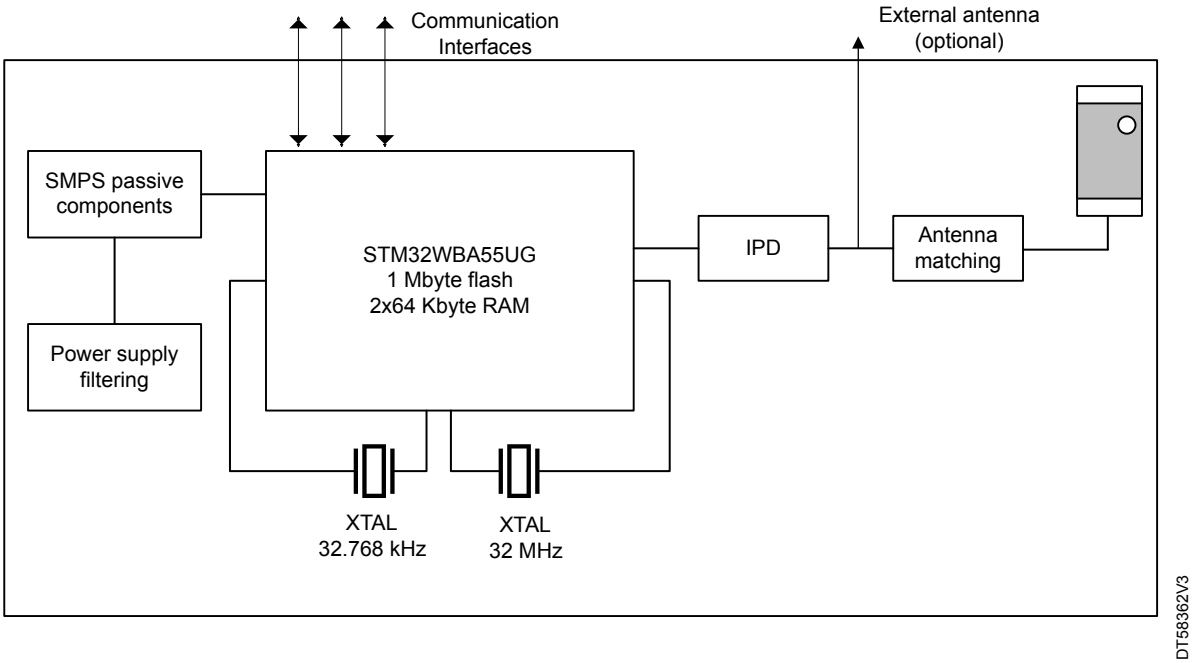

3.1 Power supply

The power supply requirements are identical to those of the STM32WBA55UG devices, detailed in the datasheet DS14127. Filtering capacitors on power supply pins and components for the SMPS are already integrated into the module.

The power supply $VDDRF_{PA}$ of STM32WBA55UG is connected to VDD inside the module, thus enabling the option for extra RF power.

3.2 Clocks

As the crystals are already integrated into the package, it is impossible to use any clock in bypass mode. The module integrates a 32.768 kHz crystal for LSE and a 32 MHz crystal for the HSE clock.

- To tune the HSE clock, the software must read trim data from OTP address `0x0BF9 000E` and copy it to the RCC_ECSCR1.HSETRIM register.
- The user must not change the RCC_ECSCR1 register configuration to keep the default parameters.
- LSCO and MCO outputs are available.

Downloaded from Arrow.com.

3.3 Antenna

The rectangular module has one shorter side clearly different from the remaining finish surface. This side is unshielded and the mold cover contains the integrated antenna.

To use the internal antenna, pin 51 (ANT_INT) and pin 50 (ANT_EXT) must be connected as in Figure 2.

If an external antenna is used, ANT_IN must be shorted to ground, and ANT_OUT connected to the external antenna matching network and to the antenna itself, as in Section 3.3: Antenna.

Figure 2. Shorted pins to use internal antenna

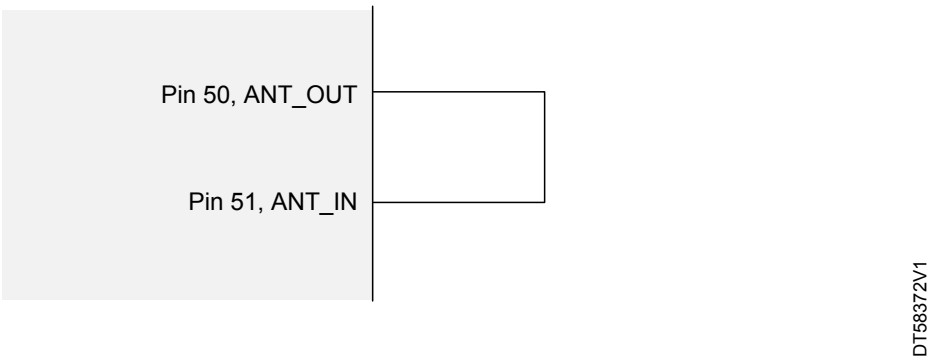

3.4 OTP

The STM32WBA5MMG features a 1-Kbyte one-time programmable (OTP) memory for use by the end product (see details in DS14127 and RM0493).

Note: The device uses the first and last words of this area for trimming and identification purposes. As a consequence, addresses 0xBF90000h to 0xBF9000Fh and 0xBF090190h to 0xBF901FFh cannot be changed.

Downloaded from Arrow.com.

4 Available peripherals

All peripherals available in STM32WBA5x lines microcontrollers based on the UFBGA59 package are available and accessible on this module.

The pins on the module offer access to the following system peripherals:

- 12-bit ADC 2.5 Msps with hardware oversampling
- Three UARTs (ISO 7816, IrDA, modem)
- Two SPIs
- Two I2C Fm+ (1 Mbit/s), SMBus/PMBus®
- Touch sensing controller, up to 20 sensors, supporting touch key, linear and rotary touch sensors
- One 16-bit, advanced motor control timer
- Three 16-bit timers
- One 32-bit timer
- Two low-power 16-bit timers (available in Stop mode)
- Two Systick timers
- Two watchdogs
- 8-channel DMA controller, functional in Stop mode

Downloaded from Arrow.com.

5 Pin descriptions

Figure 3. STM32WBA5MMG module pinout

Package bottom view

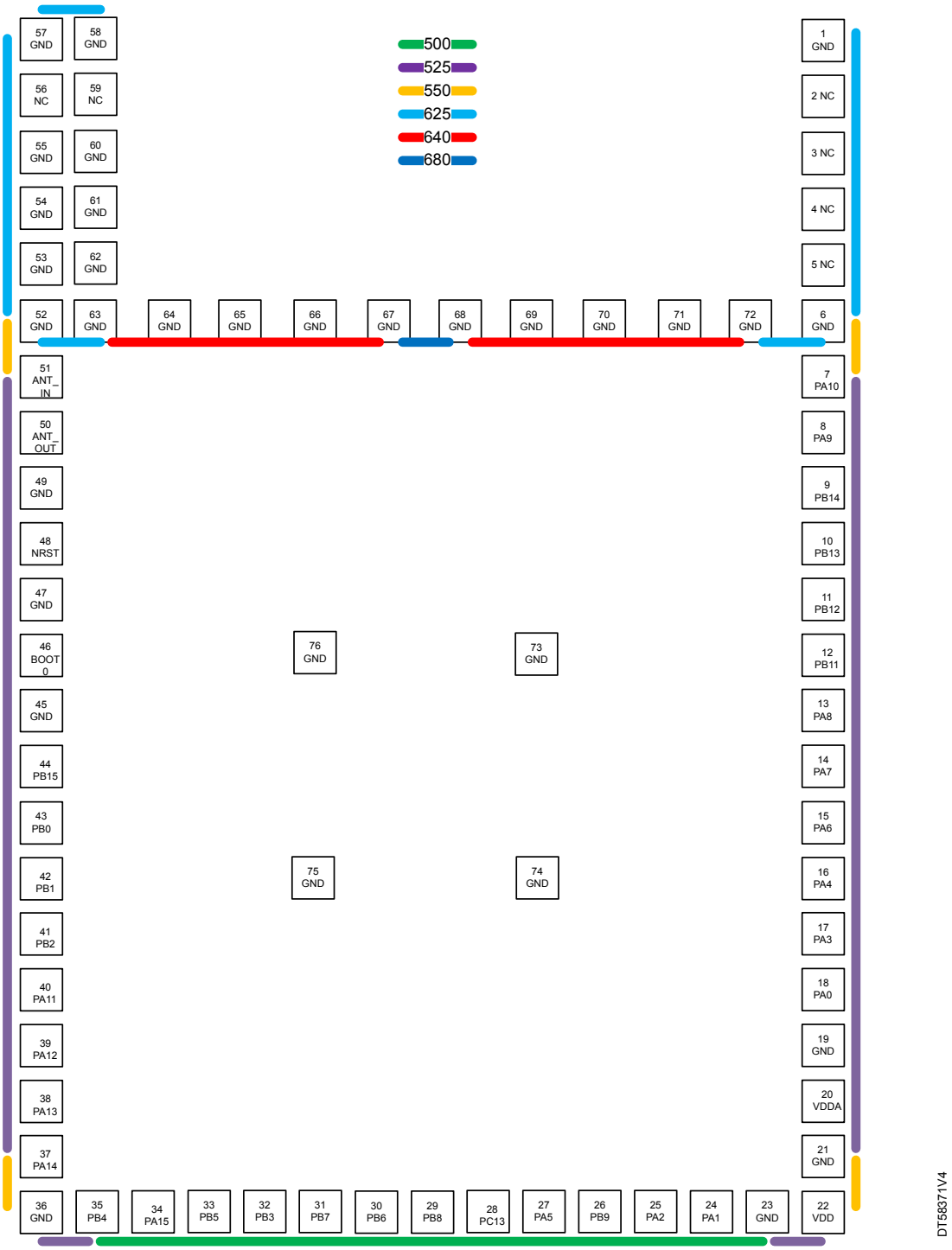

Downloaded from Arrow.com.

Table 1. STM32WBA5MMG pin/ball definition

Pin name			Pin type
STM32WBA5MMG	STM32WBA55UGI	Function after reset	
1	-	GND	S
2	-	NC	S
3	-	NC	S
4	-	NC	S
5	-	NC	S
6	-	GND	S
7	A3	PA10	I/O
8	B3	PA9	I/O
9	A2	PB14	I/O
10	B2	PB13	I/O
11	C2	PB12	I/O
12	D2	PB11	I/O
13	D1	PA8	I/O
14	E2	PA7	I/O
15	E1	PA6	I/O
16	G1	PA4	I/O
17	G2	PA3	I/O
18	H1	PA0	I/O
19	-	GND	S
20	F1	VDDA	S
21	-	GND	S
22	E4	VDD	S
23	-	GND	S
24	H2	PA1	I/O
25	G3	PA2	I/O
26	H3	PB9	I/O
27	F3	PA5	I/O
28	G5	PC13	I/O
29	H5	PB8	I/O
30	G6	PB6	I/O
31	H6	PB7	I/O
32	G7	PB3	I/O
33	H7	PB5	I/O
34	G8	PA15	I/O
35	H8	PB4	I/O
36	-	GND	S
37	F6	PA14	I/O
38	F8	PA13	I/O
39	F7	PA12	I/O

Downloaded from Arrow.com.

Pin name			Pin type
STM32WBA5MMG	STM32WBA55UGI	Function after reset	
40	E8	PA11	I/O
41	E7	PB2	I/O
42	D8	PB1	I/O
43	D7	PB0	I/O
44	C8	PB15	I/O
45	-	GND	S
46	C7	BOOT0	I/O
47	-	GND	S
48	B8	NRST	I/O
49	-	GND	S
50	-	ANT_OUT	O
51	-	ANT_IN	I
52	-	GND	S
53	-	GND	S
54	-	GND	S
55	-	GND	S
56	-	NC	S
57	-	GND	S
58	-	GND	S
59	-	NC	S
60	-	GND	S
61	-	GND	S
62	-	GND	S
63	-	GND	S
64	-	GND	S
65	-	GND	S
66	-	GND	S
67	-	GND	S
68	-	GND	S
69	-	GND	S
70	-	GND	S
71	-	GND	S
72	-	GND	S
73	-	GND	S
74	-	GND	S
75	-	GND	S
76	-	GND	S

Downloaded from Arrow.com.

6 Electrical characteristics

6.1 Operating conditions

Table 2. STM32WBA5MMG operating conditions

Parameter	Min	Typ	Max	Unit
V_{DD}	1.71	3.3	3.6	V
Operating ambient temperature range	-40	-	85	°C
Storage temperature range	-40	-	125	°C

6.2 Power consumption

The power consumption is identical to the regular STM32WBA55xx products. For details, refer to datasheet DS14127.

6.3 RF characteristics

For details, refer to datasheet DS14127.

6.4 Schematics and layout for PCB

For examples of schematics and layout using this device, refer to the description of B-WBA5M-WPAN.

For guidelines on the design with module STM32WBA5MMG, refer to AN6305.

In particular, the board designer must respect the distances indicated in Figure 4. No metal layers must be used in the clearance area.

Figure 4. Distances to be respected in the layout

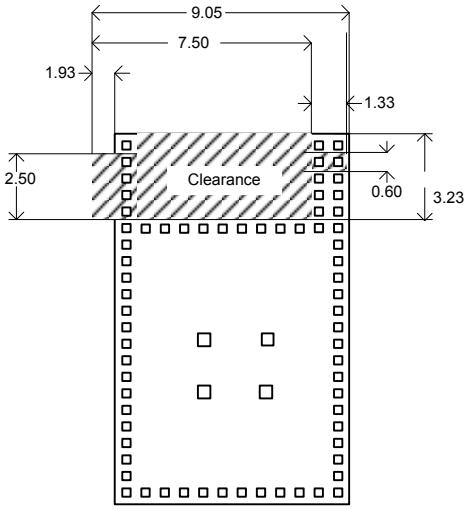

6.5 Antenna radiation patterns and efficiency

Refer to technical note TN1565 "Antenna radiation patterns of module STM32WBA5MMG".

Downloaded from Arrow.com.

7 Package information

To meet environmental requirements, ST offers these devices in different grades of ECOPACK packages, depending on their level of environmental compliance. ECOPACK specifications, grade definitions and product status are available at: www.st.com. ECOPACK is an ST trademark.

7.1 Device marking

Refer to technical note "Reference device marking schematics for STM32 microcontrollers and microprocessors" (TN1433) available on www.st.com, for the location of pin 1 / ball A1 as well as the location and orientation of the marking areas versus pin 1 / ball A1.

Parts marked as "ES", "E" or accompanied by an engineering sample notification letter, are not yet qualified and therefore not approved for use in production. ST is not responsible for any consequences resulting from such use. In no event will ST be liable for the customer using any of these engineering samples in production. ST's Quality department must be contacted prior to any decision to use these engineering samples to run a qualification activity.

A WLCSP simplified marking example (if any) is provided in the corresponding package information subsection.

7.2 SiP-LGA76 package information (B0N2)

This SiP-LGA is a 76-lead, 8 x 12.5 mm, system in package land grid array package.

Figure 5. SiP-LGA76 - Outline

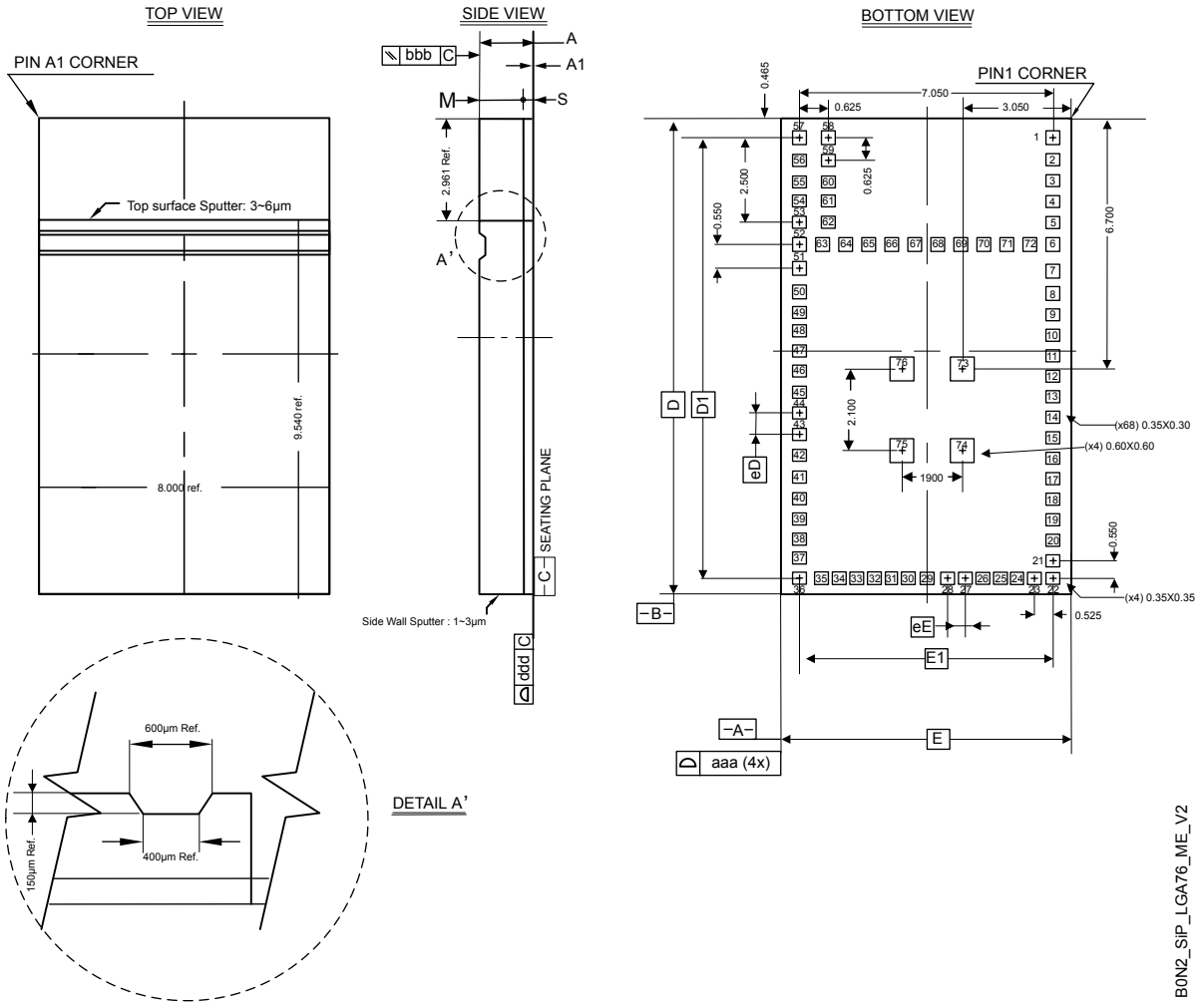

1. *Drawing is not to scale.*

Downloaded from Arrow.com.

Table 3. SiP-LGA76 - Mechanical data

Symbol	millimeters			inches[1]		
	Min	Typ	Max	Min	Typ	Max
A		1.372 ± 0.046			0.0540 ± 0.0018	
A1		0.030 ± 0.020			0.0012 ± 0.0008	
D	12.400	12.500	12.600	0.4882	0.4921	0.4961
D1		11.575			0.4557	
E	7.900	8.000	8.100	0.3110	0.3150	0.3189
eD[2]		0.525			0.0207	
eE[2]		0.500			0.0197	
E1		7.050			0.2776	
M		1.100 REF[3]			0.0433 REF	
N[4]		76				
S		0.242 REF			0.0095 REF	
Lead width[5]		0.350 x 0.300 0.350 x 0.350 0.600 x 0.600			0.0138 x 0.0118 0.0138 x 0.0138 0.0236 x 0.0236	
aaa		0.100			0.0039	
bbb		0.100			0.0039	
ddd		0.100			0.0039	

1. *Values in inches are converted from mm and rounded to 4 decimal digits.*
2. *See also Figure 3 for pitches between balls.*
3. *Nominal value.*
4. *Number of pins.*
5. *0.350 x 0.350 applies to corner balls 1, 22, 36 and 57.*

Downloaded from Arrow.com.

7.3 Thermal characteristics

The device thermal characteristics are defined below, and the constant values are given in Table 4:

- θJA is the junction-to-ambient thermal resistance (EIA/JESD51-2 and EIA/JESD51-6).
  θJA represents the resistance to the heat flowing from the chip to ambient air. It is an indicator of package heat dissipation capability, a lower θJA means better overall thermal performance. It is calculated as follows:
  θJA = (TJ - TA)/PH
  where:
  - TJ = junction temperature
  - TA = ambient temperature
  - PH = power dissipation
- φJT is the junction-to-top-center thermal characterization parameter (EIA/JESD51-2 and EIA/JESD51-6).
- φJT is used for estimating the junction temperature by measuring TT in an actual environment. It is calculated as follows:
  φJT = (TJ - TT)/PH
  where TT = temperature at the top-center of the package
- θJC is the junction-to-case thermal resistance.
  θJC represents the resistance to the heat flowing from the chip to package top case. θJC is important when an external heat sink is attached on package top. It is calculated as follows:
  θJC = (TJ – TC)/PH
  where TC = case temperature attached with a cold plate
- θJB is the junction-to-board thermal resistance (EIA/JESD51-8).
- θJB represents the resistance to the heat flowing from the chip to PCB. θJB is used in compact thermal models for system-level thermal simulation. It is calculated as follows:
  θJB = (TJ – TB)/PH
  where TB = board temperature with ring cold plate fixture applied

Table 4. Thermal characteristics

Symbol	Max TJ (°C)	TT (°C)	φJT (°C/W)	θJA (°C/W)	θJB (°C/W)	θJC (°C/W)
Value	96.95	96.88	0.15	26.32	12.39	7.95

7.3.1 Board design

For information and recommendations related to board design, landing pads, stencils, and the solder reflow profile for LGA packages, refer to AN5886 *Guidelines for design and board assembly of land grid array packages*, available on www.st.com.

Downloaded from Arrow.com.

8 Ordering information

Example: STM32 WB A5 M M G H 6 TR

Device family

STM32 = Arm-based 32-bit microcontroller

Product type

WB = Wireless Bluetooth

Device subfamily

A5 = STM32WBA5

Component type

M = Module

Pin count

M = 76 pins

Flash memory size

G = 1 Mbyte

Package

H = LGA

Temperature range

6 = Industrial temperature range, –40 °C to 85 °C

Packing

TR = tape and reel

Note: For a list of available options (such as speed and package) or for further information on any aspect of this device, contact your nearest ST sales office.

Downloaded from Arrow.com.

9 Certification

The STM32WBA5MMG module, with its internal antenna, has passed the following certifications:

- Bluetooth® LE (RF_PHY)
- CE (RED)
- FCC
- ISED
- Japan (MIC)
- REACH
- RoHS

Further certifications are underway:

- Taiwan (NCC)
- China (SRRC)
- Korea (KC)
- Brazil (ANATEL)

All certification reports are available on the STM32WBA5MMG page.

9.1 Bluetooth® LE (RF_PHY) certification

The module has obtained Bluetooth® LE RF_PHY certification. The details are published on the website Bluetooth.com.

9.2 CE certification

The STM32WBA5MMG module has obtained CE certification.

The module is provided with CE marking.

Figure 6. CE certification logo

9.3 FCC certification

The STM32WBA5MMG module complies with part 15 of the FCC rules.

The FCC ID is YCP-32WBA5MMG01.

The module label on the box used for shipment includes the corresponding FCC ID.

The operation is subject to the following two conditions:

- This device may not cause harmful interference.
- This device must accept any interference received, including interference that may cause undesired operation.

Downloaded from Arrow.com.

Note: This equipment has been tested and found to comply with the limits for a Class B digital device, pursuant to part 15 of the FCC Rules. These limits are designed to provide reasonable protection against harmful interference in a residential installation. This equipment generates, uses and can radiate radio frequency energy and, if not installed and used in accordance with the instructions, may cause harmful interference to radio communications. However, there is no guarantee that interference does not occur in a particular installation. If this equipment does cause harmful interference to radio or television reception, which can be determined by turning the equipment off and on, the user is encouraged to try to correct the interference by one or more of the following measures:

- *Reorient or relocate the receiving antenna.*
- *Increase the separation between the equipment and receiver.*
- *Connect the equipment into an outlet on a circuit different from that to which the receiver is connected.*
- *Consult the dealer or an experienced radio/TV technician for help.*

Separation

To meet the SAR exemption for portable conditions, the minimum separation distances indicated in Minimum Separation Distances for SAR Evaluation Exemption must be maintained between the human body and the radiator (antenna) at all times.

This transmitter module is tested in a standalone RF Exposure condition, and in case of any co-located radio transmitter being allowed to transmit simultaneously, or in case of portable use at closer distances from the human body than those allowing the exceptions rules to be applied, a separate additional SAR evaluation, or a reduction in the max output power or in the duty-cycle, might be required for the host, ultimately leading to a Class II Permissive Change, or more rarely to a new grant.

Important note: In the event that the conditions for the exemption cannot be met, the final product will likely have to undergo additional testing to evaluate the RF Exposure, or go through some re-configuration of the max output power and/or duty-cycle in order for the FCC authorization to remain valid, and a permissive change will have to be applied. The SAR evaluation (and/or reconfiguration) is in the responsibility of the end-product's manufacturer, as well as the permissive change that can be carried out with the help of the customer's own Telecommunication Certification Body, following a Change in ID authorization by the module's original grant holder.

Label requirements

If the identification number is not visible when the module is installed inside another device, then the outside of the device into which the module is installed must also display a label referring to the enclosed module. This label must contain the FCC ID that matches the one on the module.

Documentation requirements

The users manual or instruction manual for an intentional or unintentional radiator shall caution the user that changes or modifications not expressly approved by the party responsible for compliance could void the user's authority to operate the equipment.

Integration requirements

Colocation of this module with other transmitters that operate simultaneously are required to be evaluated using the multi-transmitter procedures.

The host integrator must follow the integration instructions provided in this document and ensure that the composite-system end product complies with the requirements by a technical assessment or evaluation to the rules and to KDB Publication 996369.

The host integrator installing this module into their product must ensure that the final composite product complies with the requirements by a technical assessment or evaluation to the rules, including the transmitter operation and should refer to guidance in KDB 996369.

9.4 ISED certification

The STM32WBA5MMG module has been tested and found compliant with the ISED RSS-247 and RSS-Gen rules.

The ISED ID is 8976A-32WBA5MMG01.

Downloaded from Arrow.com.

This module contains license-exempt transmitter(s) that comply with Innovation, Science and Economic Development Canada's license-exempt RSS(s). Operation is subject to the following two conditions:

- This module may not cause interference.
- This module must accept any interference, including interference that may cause undesired operation of the module.

L'émetteur exempt de licence contenu dans le présent appareil est conforme aux CNR d'Innovation, Sciences et Développement économique Canada applicables aux appareils radio exempts de licence. L'exploitation est autorisée aux deux conditions suivantes :

- L'appareil ne doit pas produire de brouillage.
- L'appareil doit accepter tout brouillage radioélectrique subi, même si le brouillage est susceptible d'en compromettre le fonctionnement.

9.5 MIC certification

The STM32WBA5MMG module is certified in Japan with certification number 217-252089.

Figure 7. Certification logo for Japan

R 217-252089

9.6 KC certification

The STM32WBA5MMG module is certified in Korea with certification number R-R-2AS-32WBA5MMG001.

Applicant company name: STMicroelectronics (Rousset) SAS

Equipment: Module for Bluetooth® LE, STM32WBA5MMG

Manufacturer: STMicroelectronics (Rousset) SAS, France

Figure 8. Certification logo for Korea

Downloaded from Arrow.com.

10 Product disposal

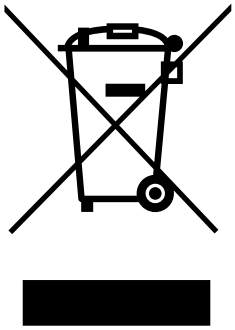

Disposal of this product: WEEE (Waste Electrical and Electronic Equipment)

(Applicable in Europe)

This symbol on the product, accessories, or accompanying documents indicates that the product and its electronic accessories must not be disposed of with household waste at the end of their working life.

To prevent possible harm to the environment and human health from uncontrolled waste disposal, separate these items from other types of waste and recycle them responsibly at a designated collection point to promote the sustainable reuse of material resources.

Household users:

Contact the retailer that you purchased the product from or your local authority for details of your nearest designated collection point.

Business users:

Contact your dealer or supplier for further information.

Downloaded from Arrow.com.

Important security notice

The STMicroelectronics group of companies (ST) places a high value on product security, which is why the ST product(s) identified in this documentation may be certified by various security certification bodies and/or may implement our own security measures as set forth herein. However, no level of security certification and/or built-in security measures can guarantee that ST products are resistant to all forms of attacks. As such, it is the responsibility of each of ST's customers to determine if the level of security provided in an ST product meets the customer needs both in relation to the ST product alone, as well as when combined with other components and/or software for the customer end product or application. In particular, take note that:

- ST products may have been certified by one or more security certification bodies, such as Platform Security Architecture (www.psacertified.org) and/or Security Evaluation standard for IoT Platforms (www.trustcb.com). For details concerning whether the ST product(s) referenced herein have received security certification along with the level and current status of such certification, either visit the relevant certification standards website or go to the relevant product page on www.st.com for the most up to date information. As the status and/or level of security certification for an ST product can change from time to time, customers should re-check security certification status/level as needed. If an ST product is not shown to be certified under a particular security standard, customers should not assume it is certified.
- Certification bodies have the right to evaluate, grant and revoke security certification in relation to ST products. These certification bodies are therefore independently responsible for granting or revoking security certification for an ST product, and ST does not take any responsibility for mistakes, evaluations, assessments, testing, or other activity carried out by the certification body with respect to any ST product.
- Industry-based cryptographic algorithms (such as AES, DES, or MD5) and other open standard technologies which may be used in conjunction with an ST product are based on standards which were not developed by ST. ST does not take responsibility for any flaws in such cryptographic algorithms or open technologies or for any methods which have been or may be developed to bypass, decrypt or crack such algorithms or technologies.
- While robust security testing may be done, no level of certification can absolutely guarantee protections against all attacks, including, for example, against advanced attacks which have not been tested for, against new or unidentified forms of attack, or against any form of attack when using an ST product outside of its specification or intended use, or in conjunction with other components or software which are used by customer to create their end product or application. ST is not responsible for resistance against such attacks. As such, regardless of the incorporated security features and/or any information or support that may be provided by ST, each customer is solely responsible for determining if the level of attacks tested for meets their needs, both in relation to the ST product alone and when incorporated into a customer end product or application.
- All security features of ST products (inclusive of any hardware, software, documentation, and the like), including but not limited to any enhanced security features added by ST, are provided on an "AS IS" BASIS. AS SUCH, TO THE EXTENT PERMITTED BY APPLICABLE LAW, ST DISCLAIMS ALL WARRANTIES, EXPRESS OR IMPLIED, INCLUDING BUT NOT LIMITED TO THE IMPLIED WARRANTIES OF MERCHANTABILITY OR FITNESS FOR A PARTICULAR PURPOSE, unless the applicable written and signed contract terms specifically provide otherwise.

Downloaded from Arrow.com.

Revision history

Table 5. Document revision history

Date	Revision	Changes
19-Dec-2024	1	Initial release.
13-Mar-2025	2	Added: • Bluetooth® LE in Section Features • Section 9: Certification and related subsections. • Section 10: Product disposal Updated occurrences of Bluetooth Low Energy to Bluetooth® LE.
06-May-2025	3	Updated Section 9.3: FCC certification.
23-Mar-2026	4	Updated: • Figure 3. STM32WBA5MMG module pinout • Section 3.1: Power supply • Figure 3. STM32WBA5MMG module pinout • Section 4: Available peripherals • Section 6.4: Schematics and layout for PCB • Section 7.2: SiP-LGA76 package information (B0N2) Added Section 9.6: KC certification

Downloaded from Arrow.com.

Contents

1 Introduction . . . 3
2 Description . . . 4
3 Module overview . . . 5
3.1 Power supply . . . 5
3.2 Clocks . . . 5
3.3 Antenna . . . 6
3.4 OTP . . . 6
4 Available peripherals . . . 7
5 Pin descriptions . . . 8
6 Electrical characteristics . . . 11
6.1 Operating conditions . . . 11
6.2 Power consumption . . . 11
6.3 RF characteristics . . . 11
6.4 Schematics and layout for PCB . . . 11
6.5 Antenna radiation patterns and efficiency . . . 11
7 Package information . . . 12
7.1 Device marking . . . 12
7.2 SiP-LGA76 package information (B0N2) . . . 12
7.3 Thermal characteristics . . . 14
7.3.1 Board design . . . 14
8 Ordering information . . . 15
9 Certification . . . 16
9.1 Bluetooth® LE (RF_PHY) certification . . . 16
9.2 CE certification . . . 16
9.3 FCC certification . . . 16
9.4 ISED certification . . . 17
9.5 MIC certification . . . 18
9.6 KC certification . . . 18
10 Product disposal . . . 19
Important security notice . . . 20
Revision history . . . 21
List of tables . . . 23
List of figures . . . 24

Downloaded from Arrow.com.

List of tables

Table 1. STM32WBA5MMG pin/ball definition . . . 9
Table 2. STM32WBA5MMG operating conditions . . . 11
Table 3. SiP-LGA76 - Mechanical data . . . 13
Table 4. Thermal characteristics . . . 14
Table 5. Document revision history . . . 21

Downloaded from Arrow.com.

List of figures

Figure 1. STM32WBA5MMG block diagram . . . 5
Figure 2. Shorted pins to use internal antenna . . . 6
Figure 3. STM32WBA5MMG module pinout . . . 8
Figure 4. Distances to be respected in the layout . . . 11
Figure 5. SiP-LGA76 - Outline . . . 12
Figure 6. CE certification logo . . . 16
Figure 7. Certification logo for Japan . . . 18
Figure 8. Certification logo for Korea . . . 18

Downloaded from Arrow.com.

IMPORTANT NOTICE – READ CAREFULLY

STMicroelectronics NV and its subsidiaries (“ST”) reserve the right to make changes, corrections, enhancements, modifications, and improvements to ST products and/or to this document at any time without notice.

In the event of any conflict between the provisions of this document and the provisions of any contractual arrangement in force between the purchasers and ST, the provisions of such contractual arrangement shall prevail.

The purchasers should obtain the latest relevant information on ST products before placing orders. ST products are sold pursuant to ST’s terms and conditions of sale in place at the time of order acknowledgment.

The purchasers are solely responsible for the choice, selection, and use of ST products and ST assumes no liability for application assistance or the design of the purchasers’ products.

No license, express or implied, to any intellectual property right is granted by ST herein.

Resale of ST products with provisions different from the information set forth herein shall void any warranty granted by ST for such product.

If the purchasers identify an ST product that meets their functional and performance requirements but that is not designated for the purchasers' market segment, the purchasers shall contact ST for more information.

ST and the ST logo are trademarks of ST. For additional information about ST trademarks, refer to www.st.com/trademarks. All other product or service names are the property of their respective owners.

Information in this document supersedes and replaces information previously supplied in any prior versions of this document.

© 2026 STMicroelectronics – All rights reserved

Downloaded from Arrow.com.