TOSHIBA CMOS Linear Integrated Circuit Silicon Monolithic

TCR8BM series

800 mA CMOS Ultra Low Dropout Regulator

1. Description

The TCR8BM series are CMOS single-output voltage regulators with an on/off control input, featuring ultra low dropout voltage, high PSRR, low inrush current and fast load transient response.

A differentiating feature is the use of a secondary bias rail as a reference voltage that allows ultra low dropout of 170 mV (Typ.) at I_{OUT} = 800 mA (1.1 V output, V_{BIAS} = 3.3 V).

These voltage regulators are available in fixed output voltages between 0.8 V and 3.6 V, and capable of driving up to 800 mA. Other features include overcurrent protection, thermal shutdown, and Auto-discharge.

The TCR8BM series are offered in the ultra small plastic mold package DFN5B (1.2 mm x 1.2 mm; t 0.38 mm).

As small ceramic input and output capacitors can be used with the TCR8BM series, these devices are ideal for portable applications that require high-density board assembly such as cellular phones.

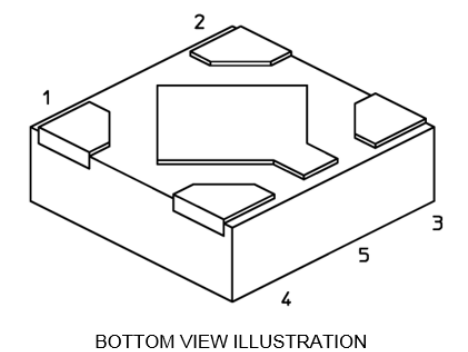

BOTTOM VIEW ILLUSTRATION

DFN5B

Weight : 1.4 mg (Typ.)

2. Application

Power IC developed for portable applications

3. Features

- Low dropout voltage
  V_{DO} = 170 mV (Typ.) at 1.1 V output, V_{BIAS} = 3.3 V, I_{OUT} = 800 mA
- Low stand-by current ($I_{BIAS(OFF)}$ = 1 μA (Max))
- Low quiescent bias current ($I_{BIAS(ON)}$ = 20 μA (Typ.) at V_{BIAS} = 5.5 V, I_{OUT} = 0 mA)
- Wide range output voltage line up (V_{OUT} = 0.8 to 3.6 V)
- Overcurrent protection
- Thermal shutdown
- Inrush current reduction
- Under voltage lockout (TCR8BMxxA products)
- Auto-discharge
- Pull down connection between CONTROL and GND
- Ultra small package DFN5B (1.2 mm x 1.2 mm ; t 0.38 mm)

Start of commercial production
2018-08

©2026
Toshiba Electronic Devices & Storage Corporation

Downloaded from Arrow.com.

4. Absolute Maximum Ratings (Ta = 25 °C)

Characteristics	Symbol	Rating	Unit
Bias voltage	V_{BIAS}	-0.3 to 6.0	V
Input voltage	V_{IN}	-0.3 to 6.0	V
Control voltage	V_{CT}	-0.3 to 6.0	V
Output voltage	V_{OUT}	-0.3 to V_{IN} + 0.3 ≤ 6.0	V
Power dissipation	P_D	600 (Note 1)	mW
Junction temperature	T_j	-40 to 150	°C
Storage temperature range	T_{stg}	−55 to 150	°C

Note: Using continuously under heavy loads (e.g. the application of high temperature/current/voltage and the significant change in temperature, etc.) may cause this product to decrease in the reliability significantly even if the operating conditions (i.e. operating temperature/current/voltage, etc.) are within the absolute maximum ratings and the operating ranges.
Please design the appropriate reliability upon reviewing the Toshiba Semiconductor Reliability Handbook ("Handling Precautions"/"Derating Concept and Methods") and individual reliability data (i.e. reliability test report and estimated failure rate, etc).

Note 1: Rating at mounting on a board
(Glass epoxy board dimension : 40 mm x 40 mm (4layer), t = 1.8 mm
Metal pattern ratio : approximately 70% each layer)

5. Operating Ranges

Characteristics	Symbol	Rating	Unit
Bias voltage	V_{BIAS}	(V_{OUT} + 1.4 ≥ 2.5) to 5.5	V
Input voltage	V_{IN}	V_{OUT} + V_{DO} to V_{BIAS}	V
Control voltage	V_{CT}	0 to V_{BIAS}	V
Output voltage	V_{OUT}	0.8 to 3.6	V
Output current	I_{OUT}	0 to 0.8 (Note 2)	A
Operation Temperature	T_{opr}	−40 to 85	°C
COUT	C_{OUT}	≥ 2.2 μF	—
CIN	C_{IN}	≥ 1.0 μF	—
CBIAS	C_{BIAS}	≥ 0.1 μF	—

Note 2: Do not operate at or near the maximum ratings of operating ranges for extended periods of time. Exposure to such conditions may adversely impact product reliability and results in failures not covered by warranty.
Maximum operating ranges output current specification defined as lifetime average junction temperature of +45 °C where max rated DC current = lifetime average current to avoid electro migration.

6. Pin Assignment (top view)

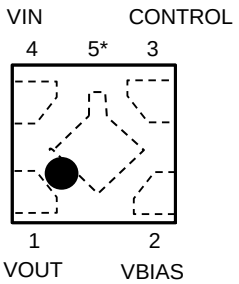

*Center electrode is GND

Downloaded from Arrow.com.

7. List of Products Number, Output voltage and Marking

Product No.	V_{OUT}(V)(Typ.)	Marking	Product No.	V_{OUT}(V)(Typ.)	Marking
TCR8BM08A	0.8	0P8	TCR8BM19A*	1.9	1P9
TCR8BM085A	0.85	0PJ	TCR8BM20A*	2.0	2P0
TCR8BM09A	0.9	0P9	TCR8BM21A*	2.1	2P1
TCR8BM095A	0.95	0PK	TCR8BM22A*	2.2	2P2
TCR8BM10	1.0	1M0	TCR8BM23A*	2.3	2P3
TCR8BM10A	1.0	1P0	TCR8BM24A*	2.4	2P4
TCR8BM105	1.05	1MA	TCR8BM25A	2.5	2P5
TCR8BM105A	1.05	1PA	TCR8BM26A*	2.6	2P6
TCR8BM11	1.1	1M1	TCR8BM27A*	2.7	2P7
TCR8BM11A	1.1	1P1	TCR8BM28A*	2.8	2P8
TCR8BM115A	1.15	1PB	TCR8BM285A*	2.85	2PJ
TCR8BM12	1.2	1M2	TCR8BM29A*	2.9	2P9
TCR8BM12A	1.2	1P2	TCR8BM295A*	2.95	2PK
TCR8BM125A*	1.25	1PC	TCR8BM30A	3.0	3P0
TCR8BM13A*	1.3	1P3	TCR8BM31A*	3.1	3P1
TCR8BM14A*	1.4	1P4	TCR8BM32A*	3.2	3P2
TCR8BM15A*	1.5	1P5	TCR8BM33A	3.3	3P3
TCR8BM16A*	1.6	1P6	TCR8BM34A*	3.4	3P4
TCR8BM17A*	1.7	1P7	TCR8BM35A*	3.5	3P5
TCR8BM18A	1.8	1P8	TCR8BM36A*	3.6	3P6

* Please contact your local Toshiba representative if you are interested in products with * sign
TCR8BMxxA products have under voltage lockout function.

Top Marking (top view)

Example: TCR8BM10 (1.0 V output)

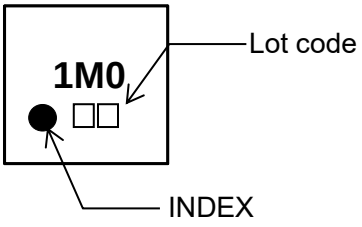

Downloaded from Arrow.com.

8. Block Diagram

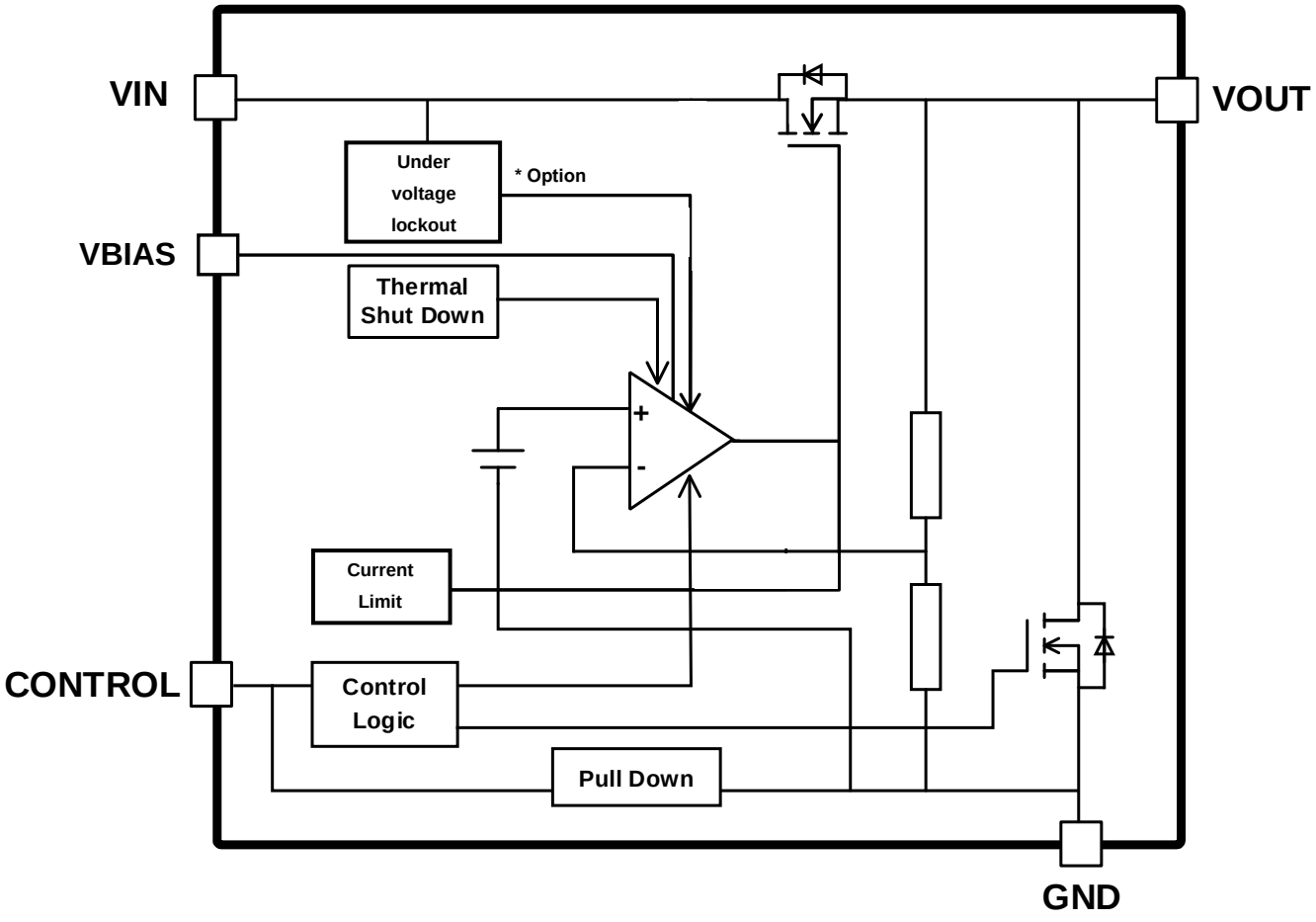

* Under voltage lockout is applied TCR8BMxxA products.

Downloaded from Arrow.com.

9. Electrical Characteristics

(Unless otherwise specified, V_{BIAS} = 3.3 V or V_{OUT} + 1.9 V whichever is greater, V_{IN} = V_{OUT} + 0.5 V, C_{IN} = 1.0 μF, C_{OUT} = 2.2 μF, C_{BIAS} = 0.1 μF)

Characteristics	Symbol	Test Condition		T_j = 25°C			T_j = -40 to 85°C (Note 8)		Unit
				Min	Typ.	Max	Min	Max	
Output voltage accuracy	V_{OUT}	I_{OUT} = 50 mA (Note 3)	V_{OUT} < 1.8 V	-18	—	+18	—	—	mV
			1.8 V ≤ V_{OUT}	-1.0	—	+1.0	—	—	%
Line regulation	Reg·line	V_{OUT} + 0.5 V ≤ V_{IN} ≤ 5.5 V, I_{OUT} = 1 mA		—	0.1	—	—	—	mV
Load regulation	Reg·load	1 mA ≤ I_{OUT} ≤ 800 mA (Note 5)		—	10	—	—	—	mV
Quiescent current (Note 4)	$I_{BIAS\ (ON)}$	I_{OUT} = 0 mA, V_{BIAS} current		—	20	—	—	36	μA
	$I_{IN\ (ON)}$	I_{OUT} = 0 mA, V_{IN} current		—	3	—	—	6	
Stand-by current	$I_{BIAS\ (OFF)}$	V_{CT} = 0 V, V_{BIAS} current		—	0.1	—	—	1.0	μA
	$I_{IN\ (OFF)}$	V_{CT} = 0 V, V_{IN} current		—	—	0.5	—	—	μA
Control pull down current	I_{CT}	—		—	0.1	—	—	—	μA
Dropout voltage	V_{DO}	I_{OUT} = 800 mA, V_{BIAS} = 3.3 V V_{OUT} = 1.1 V (Note 6)		—	170	—	—	245	mV
Under voltage lockout (Note 9)	V_{UVLO}	V_{IN} voltage		—	0.6	—	—	0.75	V
Temperature coefficient	T_{CVO}	−40°C ≤ T_{opr} ≤ 85°C		—	70	—	—	—	ppm/°C
Output noise voltage	V_{NO}	V_{BIAS} = 3.3 V, V_{IN} = V_{OUT} + 0.5 V I_{OUT} = 10 mA, 10 Hz ≤ f ≤ 100 kHz (Note 7)		—	40	—	—	—	μV_{rms}
Ripple rejection ratio	R.R.	V_{BIAS} = 3.3 V, V_{IN} = V_{OUT} + 1 V I_{OUT} = 10 mA, f = 1 kHz $V_{IN\ Ripple}$ = 200 mV_{p-p} (Note 7)		—	98	—	—	—	dB
Load transient response	ΔV_{OUT}	I_{OUT} = 1 mA to 800 mA (Note 5)		—	-100	—	—	—	mV
		I_{OUT} = 800 mA to 1 mA (Note 5)		—	100	—	—	—	
Control voltage (ON)	$V_{CT\ (ON)}$	—		0.9	—	V_{BIAS}	1.0	V_{BIAS}	V
Control voltage (OFF)	$V_{CT\ (OFF)}$	—		0	—	0.4	0	0.4	V
Current limit	I_{CL}	—		—	1100	—	850	—	mA
Output discharge on resistance	R_{SD}	—		—	10	—	—	—	Ω

Note 3: Stable state with fixed I_{OUT} condition
Note 4: Except Control pull down current
Note 5: The 1.0 V output product
Note 6: V_{DO} = V_{IN1} - (V_{OUT1} x 0.97)
V_{OUT1} is the output voltage when V_{IN} = V_{OUT} + 0.5 V.
V_{IN1} is the input voltage at which the output voltage becomes 97% of V_{OUT1} after gradually decreasing the input voltage.
Note 7: The 0.8 V output product.
Note 8: This parameter is guaranteed by design.
Note 9: Under voltage lockout is applied TCR8BMxxA products.

©2026
Toshiba Electronic Devices & Storage Corporation

Downloaded from Arrow.com.

10. Dropout voltage

(C_{IN} = 1.0 μF, C_{OUT} = 2.2 μF, C_{BIAS} = 0.1 μF, T_j = 25 °C)

Output voltages	V_{BIAS} input voltage	I_{OUT} = 800 mA			Unit
		Min	Typ.	Max (Note 10)	
0.8 V	3.3 V	—	150	210	mV
0.85 V	3.3 V	—	155	215	mV
0.9 V	3.3 V	—	155	220	mV
0.95 V	3.3 V	—	160	225	mV
1.0 V	3.3 V	—	165	230	mV
1.05 V	3.3 V	—	165	240	mV
1.1 V	3.3 V	—	170	245	mV
1.15 V	3.3 V	—	175	255	mV
1.2 V	3.3 V	—	180	260	mV
1.25 V	3.3 V	—	185	275	mV
1.3 V	3.3 V	—	190	285	mV
1.4 V	3.3 V	—	205	320	mV
1.5 V	3.4 V	—	205	315	mV
1.6 V	3.5 V	—	205	310	mV
1.7 V, 1.8 V	V_{OUT} + 1.9 V	—	200	305	mV
1.9 V, 2.0 V	V_{OUT} + 1.9 V	—	200	300	mV
2.1 V, 2.2 V	V_{OUT} + 1.9 V	—	200	295	mV
2.3 V ≤ V_{OUT} ≤ 2.6 V	V_{OUT} + 1.9 V	—	195	290	mV
2.7 V ≤ V_{OUT} ≤ 3.6 V	V_{OUT} + 1.9 V	—	195	285	mV

Note 10: T_j = -40 to 85 °C This parameter is guaranteed by design

Downloaded from Arrow.com.

11. Application Note

11.1. Example of Application Circuit

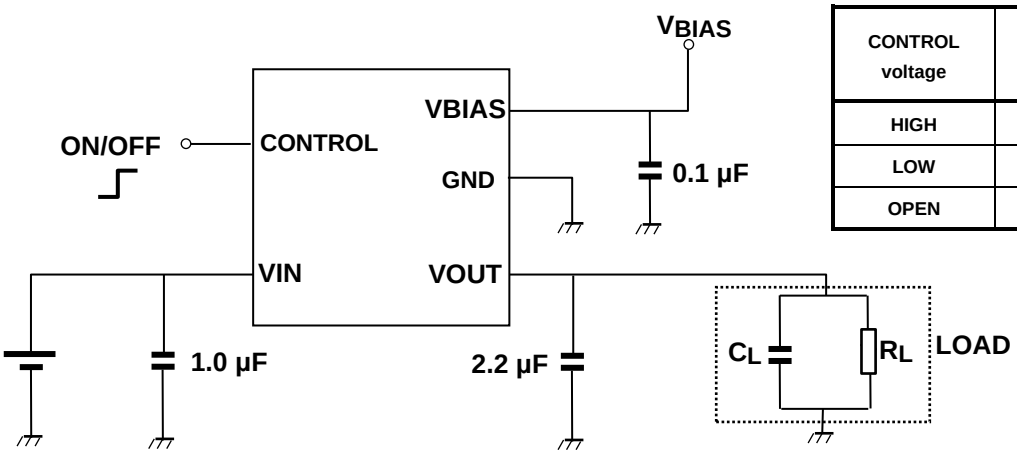

CONTROL voltage	Output voltage
HIGH	ON
LOW	OFF
OPEN	OFF

The figure above shows the Example of configuration for using a Low dropout regulator. Insert a capacitor at V_{IN}, V_{OUT} and V_{BIAS} pins for stable input/output operation. (Ceramic capacitors can be used).

11.2. Power Dissipation

Board-mounted power dissipation ratings for TCR8BM series are available in the Absolute Maximum Ratings table.
Power dissipation is measured on the board condition shown in below.

[The Board Condition]
Board material: Glass epoxy (FR4)
Board dimension: 40 mm x 40 mm (4layer), t = 1.8 mm
Metal pattern ratio: approximately 70% each layer

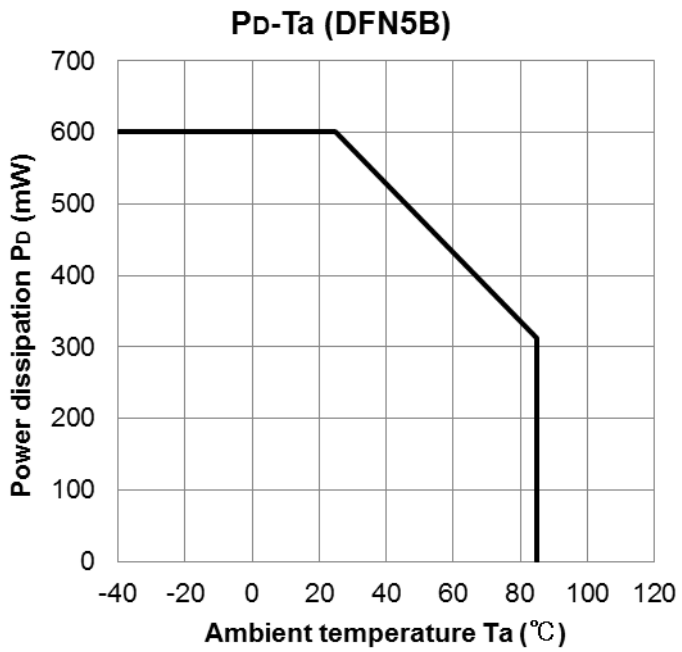

Downloaded from Arrow.com.

11.3. Attention in Use

- Capacitors(Output, Input, and Bias Capacitor)
  Ceramic capacitors can be used for these devices. However, because of the type of the capacitors, there might be unexpected thermal features. Please consider application condition for selecting capacitors. For stable operation, please use over 1.0 μF input capacitor, 0.1 μF bias capacitor and 2.2 μF output ceramic capacitor.

- Recommending for Control Pin Operation
  This device is optimized to operate the best performance when turn on and off with control pin. Especially the rush current and bias current can be suppressed by using control pin after applying V_{IN} and V_{BIAS}.
  TCR8BMxxA products have V_{IN} under voltage lockout function, bias current is suppressed at low V_{IN} even when V_{BIAS} and V_{CT} are applied.

- Mounting
  The long distance between IC and output capacitor might affect phase compensation by impedance in wire and inductor. For stable power supply, output capacitor need to mount near IC as much as possible. Also V_{IN} and GND pattern need to be large and make the wire impedance small as possible.

- Permissible Loss
  Please have enough design patterns for expected maximum permissible loss. And under consideration of ambient temperature, input voltage, and output current etc, we recommend proper dissipation ratings for maximum permissible loss; in general maximum dissipation rating is 70 to 80 percent.

- Over current Protection and Thermal shut down function
  Over current protection and Thermal shut down function are designed in these products, but these are not designed to constantly ensure the suppression of the device within operation limits. Depending on the condition during actual usage, it could affect the electrical characteristic specification and reliability. Also note that if output pins and GND pins are not completely shorted out, these products might break down.
  When using these products, please read through and understand the concept of dissipation for absolute maximum ratings from the above mention or our ‘Semiconductor Reliability Handbook’. Then use these products under absolute maximum ratings in any condition. Furthermore, Toshiba recommends inserting failsafe system into the design.

©2026
Toshiba Electronic Devices & Storage Corporation

Downloaded from Arrow.com.

12. Representative Typical Characteristics

12.1. Dropout Voltage vs. Output Current ($V_{IN} = V_{OUT} + 1$ V)

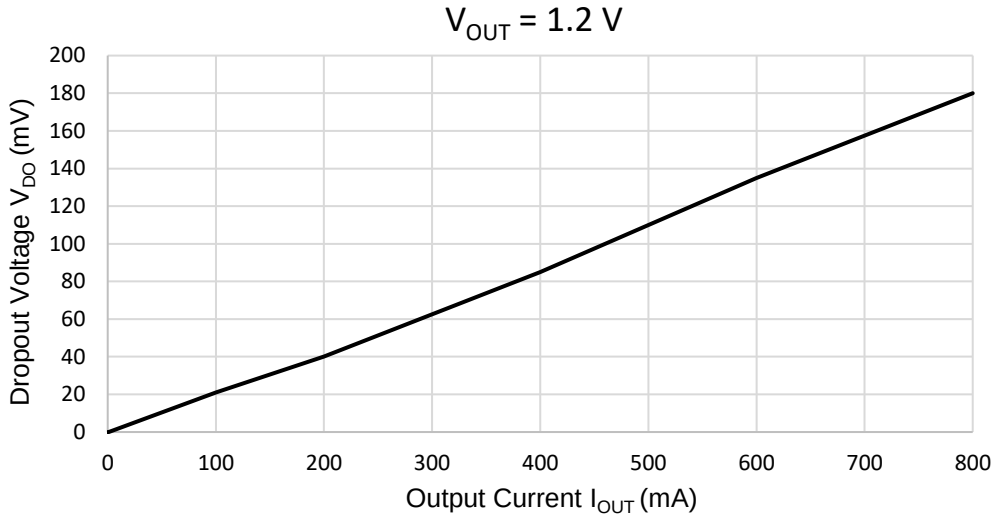

12.2. Output Current Limit (Ta = 25 °C)

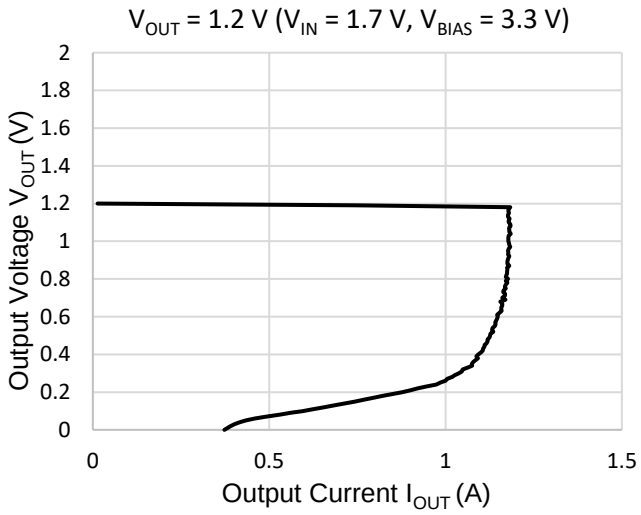

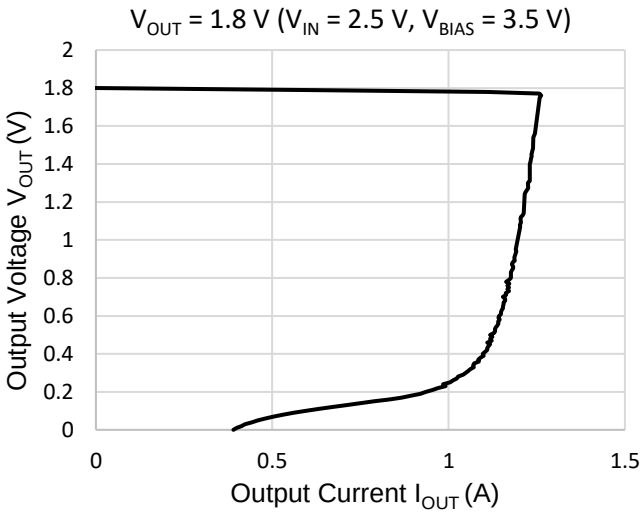

Downloaded from Arrow.com.

12.3. Ripple rejection Ratio vs. Frequency

(C_{IN} = none, C_{OUT} = 2.2 μF, V_{IN} = 2.2 V, V_{BIAS} = 3.3 V, $V_{IN\ Ripple}$ = 200mV$_{p-p}$, Ta = 25 °C)

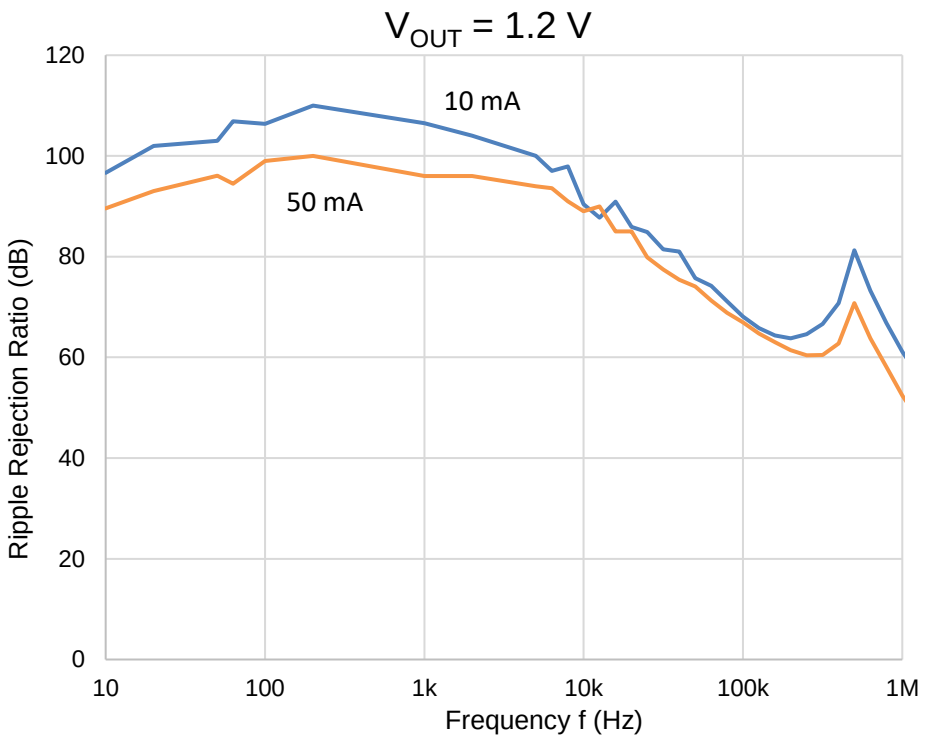

Downloaded from Arrow.com.

12.4. t_{ON} / t_{OFF} Response

(C_{IN} = 1.0 μF, C_{OUT} = 2.2 μF, V_{IN} = V_{OUT} + 0.5 V, V_{BIAS} = 3.3 V, $V_{CONTROL}$ = 0 V⇔1 V, Ta = 25 °C)

- **I_{OUT} = 0 mA**

V_{OUT} = 1.2 V

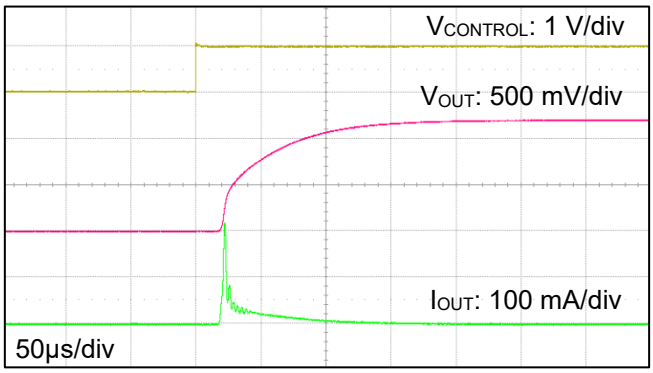

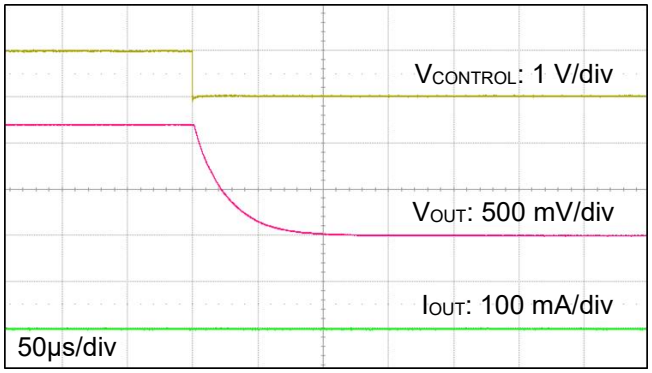

- **I_{OUT} = 800 mA**

V_{OUT} = 1.2 V

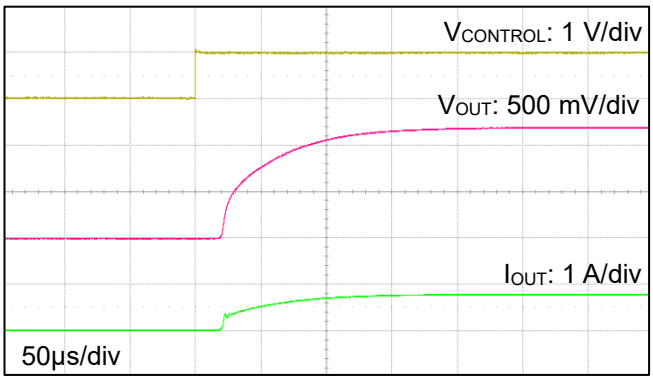

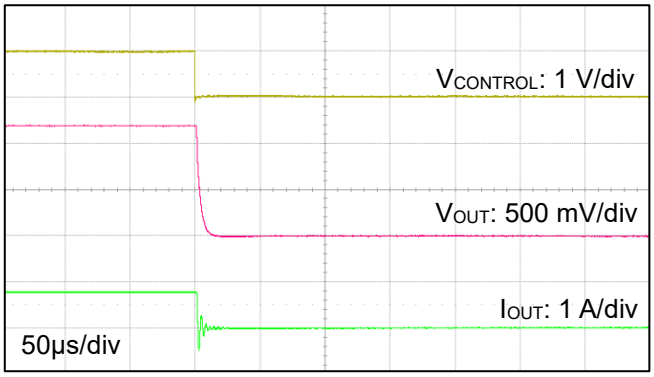

Downloaded from Arrow.com.

12.5. Load Transient Response

(C_{IN} = 1 μF, C_{OUT} = 2.2 μF, V_{IN} = 1.7 V, V_{OUT} = 1.2 V, V_{BIAS} = 3.3 V, I_{OUT} = 1 mA ⇔ 800 mA, t_r = 1μs, t_f = 1μs, Ta = 25 °C)

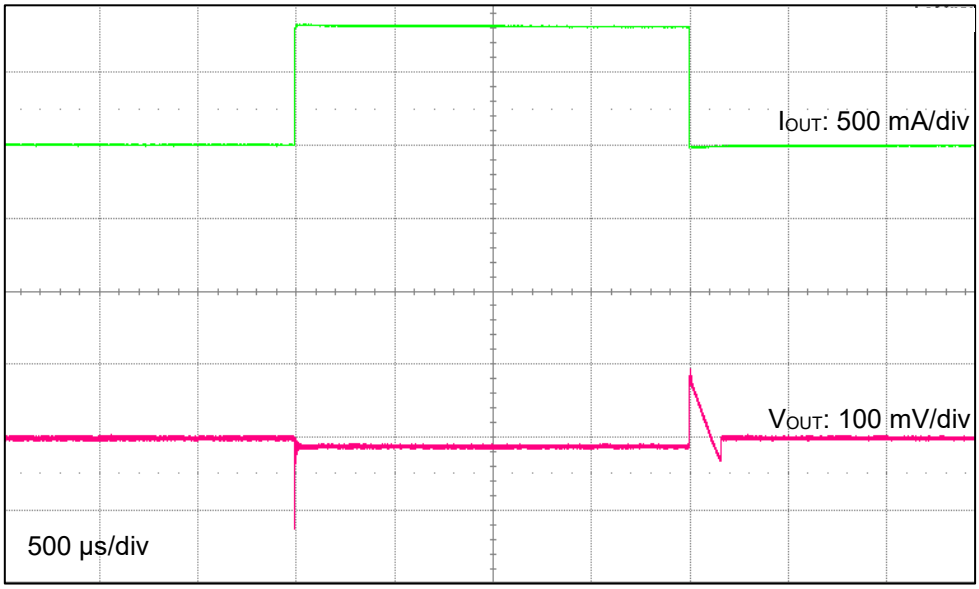

The above characteristics curves are presented for reference only and not guaranteed by production test, unless otherwise noted.

Downloaded from Arrow.com.

13. Package Dimensions

DFN5B

Unit: mm

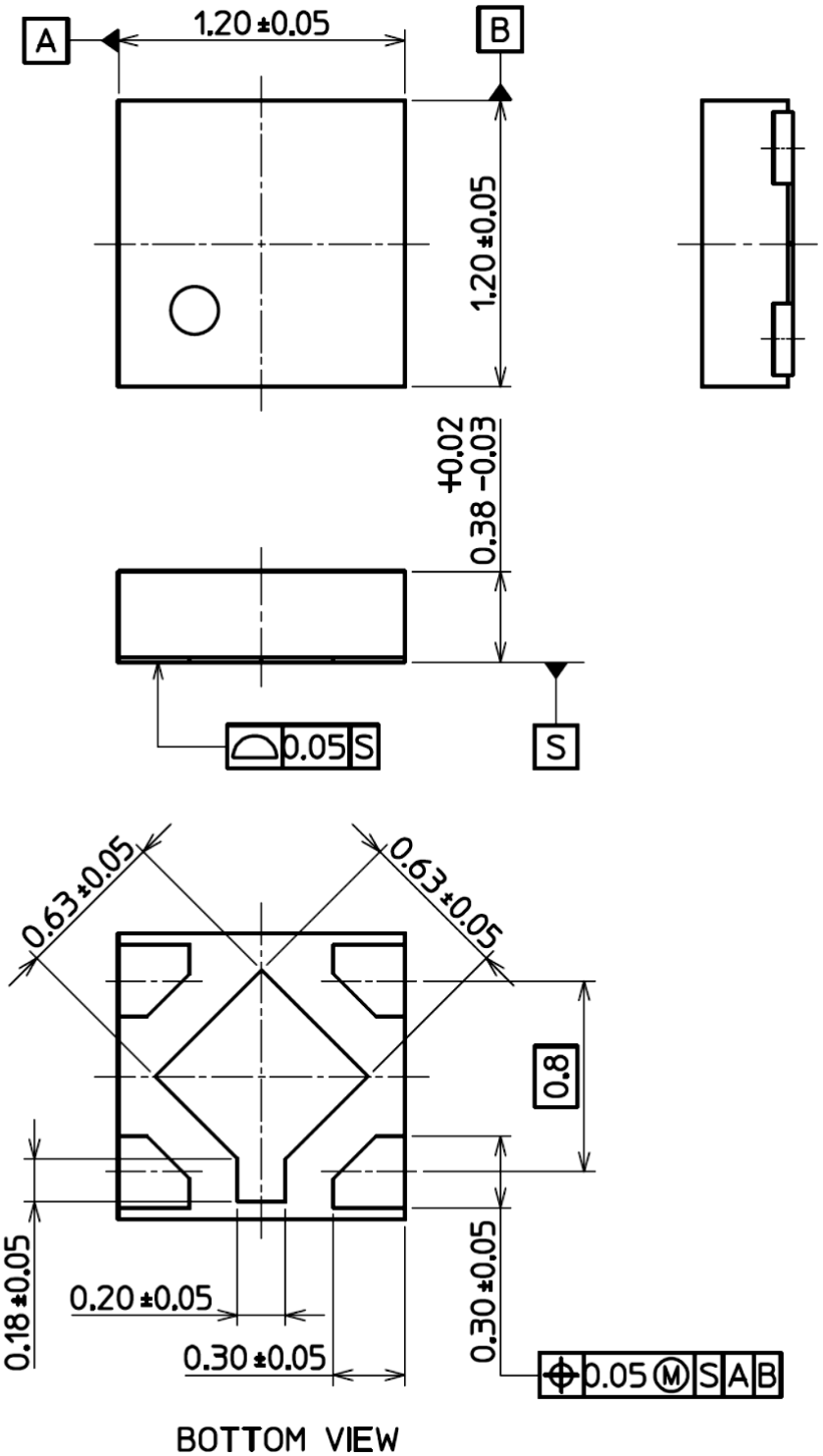

Weight : 1.4 mg (Typ.)

Downloaded from Arrow.com.

14. Land pattern dimensions for reference only

DFN5B

Unit: mm

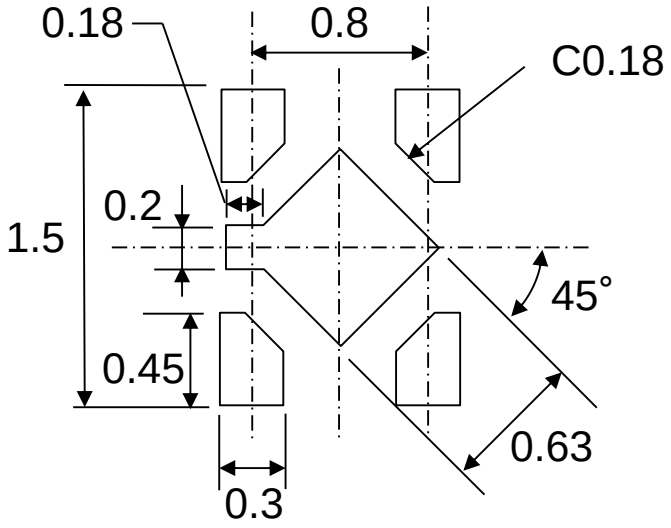

Downloaded from Arrow.com.

RESTRICTIONS ON PRODUCT USE

Toshiba Corporation and its subsidiaries and affiliates are collectively referred to as “TOSHIBA”.
Hardware, software and systems described in this document are collectively referred to as “Product”.

- TOSHIBA reserves the right to make changes to the information in this document and related Product without notice.
- This document and any information herein may not be reproduced without prior written permission from TOSHIBA. Even with TOSHIBA's written permission, reproduction is permissible only if reproduction is without alteration/omission.
- Though TOSHIBA works continually to improve Product's quality and reliability, Product can malfunction or fail. Customers are responsible for complying with safety standards and for providing adequate designs and safeguards for their hardware, software and systems which minimize risk and avoid situations in which a malfunction or failure of Product could cause loss of human life, bodily injury or damage to property, including data loss or corruption. Before customers use the Product, create designs including the Product, or incorporate the Product into their own applications, customers must also refer to and comply with (a) the latest versions of all relevant TOSHIBA information, including without limitation, this document, the specifications, the data sheets and application notes for Product and the precautions and conditions set forth in the "TOSHIBA Semiconductor Reliability Handbook" and (b) the instructions for the application with which the Product will be used with or for. Customers are solely responsible for all aspects of their own product design or applications, including but not limited to (a) determining the appropriateness of the use of this Product in such design or applications; (b) evaluating and determining the applicability of any information contained in this document, or in charts, diagrams, programs, algorithms, sample application circuits, or any other referenced documents; and (c) validating all operating parameters for such designs and applications. **TOSHIBA ASSUMES NO LIABILITY FOR CUSTOMERS' PRODUCT DESIGN OR APPLICATIONS.**
- **PRODUCT IS NEITHER INTENDED NOR WARRANTED FOR USE IN EQUIPMENTS OR SYSTEMS THAT REQUIRE EXTRAORDINARILY HIGH LEVELS OF QUALITY AND/OR RELIABILITY, AND/OR A MALFUNCTION OR FAILURE OF WHICH MAY CAUSE LOSS OF HUMAN LIFE, BODILY INJURY, SERIOUS PROPERTY DAMAGE AND/OR SERIOUS PUBLIC IMPACT ("UNINTENDED USE").** Except for specific applications as expressly stated in this document, Unintended Use includes, without limitation, equipment used in nuclear facilities, equipment used in the aerospace industry, Class 3 medical devices, equipment used for automobiles, and military vehicles and munitions. **IF YOU USE PRODUCT FOR UNINTENDED USE, TOSHIBA ASSUMES NO LIABILITY FOR PRODUCT.** For details, please contact your TOSHIBA sales representative or contact us via our website.
- Do not disassemble, analyze, reverse-engineer, alter, modify, translate or copy Product, whether in whole or in part.
- Product shall not be used for or incorporated into any products or systems whose manufacture, use, or sale is prohibited under any applicable laws or regulations.
- The information contained herein is presented only as guidance for Product use. No responsibility is assumed by TOSHIBA for any infringement of patents or any other intellectual property rights of third parties that may result from the use of Product. No license to any intellectual property right is granted by this document, whether express or implied, by estoppel or otherwise.
- **ABSENT A WRITTEN SIGNED AGREEMENT, EXCEPT AS PROVIDED IN THE RELEVANT TERMS AND CONDITIONS OF SALE FOR PRODUCT, AND TO THE MAXIMUM EXTENT ALLOWABLE BY LAW, TOSHIBA (1) ASSUMES NO LIABILITY WHATSOEVER, INCLUDING WITHOUT LIMITATION, INDIRECT, CONSEQUENTIAL, SPECIAL, OR INCIDENTAL DAMAGES OR LOSS, INCLUDING WITHOUT LIMITATION, LOSS OF PROFITS, LOSS OF OPPORTUNITIES, BUSINESS INTERRUPTION AND LOSS OF DATA, AND (2) DISCLAIMS ANY AND ALL EXPRESS OR IMPLIED WARRANTIES AND CONDITIONS RELATED TO SALE, USE OF PRODUCT, OR INFORMATION, INCLUDING WARRANTIES OR CONDITIONS OF MERCHANTABILITY, FITNESS FOR A PARTICULAR PURPOSE, ACCURACY OF INFORMATION, OR NONINFRINGEMENT.**
- Do not use or otherwise make available Product or related software or technology for any military purposes, including without limitation, for the design, development, use, stockpiling or manufacturing of nuclear, chemical, or biological weapons or missile technology products (mass destruction weapons). Product and related software and technology may be controlled under the applicable export laws and regulations including, without limitation, the Japanese Foreign Exchange and Foreign Trade Law and the U.S. Export Administration Regulations. Export and re-export of Product or related software or technology are strictly prohibited except in compliance with all applicable export laws and regulations.
- Please contact your TOSHIBA sales representative for details as to environmental matters such as the RoHS compatibility of Product. Please use Product in compliance with all applicable laws and regulations that regulate the inclusion or use of controlled substances, including without limitation, the EU RoHS Directive. **TOSHIBA ASSUMES NO LIABILITY FOR DAMAGES OR LOSSES OCCURRING AS A RESULT OF NONCOMPLIANCE WITH APPLICABLE LAWS AND REGULATIONS.**

Toshiba Electronic Devices & Storage Corporation
https://toshiba.semicon-storage.com/

©2026
Toshiba Electronic Devices & Storage Corporation

Downloaded from Arrow.com.