Sound Processor Series for Car Audio

Sound Processors with Built-in 3-band Equalizer

BD37531FV,BD37532FV,BD37533FV,BD37534FV

No.10085EAT06

●Description

BD37531FV, BD37532FV, BD37533FV, BD37534FV are sound processors built-in 3-band equalizer for car audio. The functions are stereo input selector available to switch single end input and ground isolation input, input-gain control, main volume, loudness, 5ch fader volume, LPF for subwoofer(except BD37531FV), mixing input(except BD37531FV, BD37532FV). Moreover, “Advanced switch circuit”, that is ROHM original technology, can reduce various switching noise (ex. No-signal, low frequency likes 20Hz & large signal inputs). “Advanced switch” makes control of microcomputer easier, and can construct high quality car audio system.

●Features

1) Reduce switching noise of input gain control, mute, main volume, fader volume, bass, middle, treble, loudness by using advanced switch circuit [Possible to control all steps]
2) Built-in differential input selector that can make various combination of single-ended / differential input.
3) Built-in ground isolation amplifier inputs, ideal for external stereo input.
4) Built-in input gain controller reduces switching noise for volume of a portable audio input.
5) Decrease the number of external components by built-in 3-band equalizer filter, LPF for subwoofer (except BD37531FV), loudness filter. And, possible to control Q, Gv, fo of 3-band equalizer and fc of LPF, Gv of loudness by I^2C BUS control freely
6) It is possible for the bass, middle, treble to the gain adjustment quantity of ±20dB and 1 dB step gain adjustment.
7) Terminals for the subwoofer outputs are equipped, and the audio signal outputs of front, back and subwoofer can be chosen with the I2C BUS control.
8) Built-in mixing input, mixing attenuator. (except BD37531FV, BD37532FV)
9) Bi-CMOS process is suitable for the design of low current and low energy. And it provides more quality for small scale regulator and heat in a set.
10) Package is SSOP-B28. Putting input-terminals together and output-terminals together can make PCB layout easier and can makes area of PCB smaller.
11) It is possible to control by 3.3V / 5V for I^2C BUS.

●Applications

It is the optimal for the car audio. Besides, it is possible to use for the audio equipment of mini Compo, micro Compo, TV etc with all kinds.

© 2010 ROHM Co., Ltd. All rights reserved.

Downloaded from Arrow.com.

● **Line up matrix**

<table>
<tr><th>Function</th><th>BD37531FV</th><th>BD37532FV</th><th>BD37533FV</th><th>BD37534FV</th><th>Specifications</th></tr>
<tr><td>Input selector</td><td>○</td><td>○</td><td>○</td><td>○</td><td>・(Stereo input)
・Single-End/Diff/Full-Diff
(Possible to set the number of single-end/diff/full-diff as follows)
<table>
<tr><th></th><th>Single-End</th><th>Differential</th><th>Full-Differential</th></tr>
<tr><td>Mode 1</td><td>0</td><td>3</td><td>1</td></tr>
<tr><td>Mode 2</td><td>1</td><td>2</td><td>1</td></tr>
<tr><td>Mode 3</td><td>3</td><td>1</td><td>1</td></tr>
<tr><td>Mode 4</td><td>4</td><td>0</td><td>1</td></tr>
<tr><td>Mode 5</td><td>5</td><td>1</td><td>0</td></tr>
<tr><td>Mode 6</td><td>6</td><td>0</td><td>0</td></tr>
</table>
Table.1 Combination of input selector</td></tr>
<tr><td>Input gain</td><td>○</td><td>○</td><td>○</td><td>○</td><td>・0～20dB（1dB step）
・Possible to use “Advanced switch” for prevention of switching noise.</td></tr>
<tr><td>Mute</td><td>○</td><td>○</td><td>○</td><td>○</td><td>・Possible to use “Advanced switch” for prevention of switching noise.</td></tr>
<tr><td>Volume</td><td>○</td><td>○</td><td>○</td><td>○</td><td>・+15dB～-79dB（1dB step）, -∞
・Possible to use “Advanced switch” for prevention of switching noise.</td></tr>
<tr><td>Bass</td><td>○</td><td>○</td><td>○</td><td>○</td><td>・-20～+20dB（1dB step）
・Q=0.5, 1, 1.5, 2
・fo=60, 80, 100, 120Hz
・Possible to use “Advanced switch” at changing gain</td></tr>
<tr><td>Middle</td><td>○</td><td>○</td><td>○</td><td>○</td><td>・-20～+20dB（1dB step）
・Q=0.75, 1, 1.25, 1.5
・fo=500, 1k, 1.5k 2.5kHz
・Possible to use “Advanced switch” at changing gain</td></tr>
<tr><td>Treble</td><td>○</td><td>○</td><td>○</td><td>○</td><td>・-20～+20dB（1dB step）
・Q=0.75, 1.25
・fo=7.5k, 10k, 12.5k, 15kHz
・Possible to use “Advanced switch” at changing gain</td></tr>
<tr><td>Fader</td><td>○</td><td>○</td><td>○</td><td>○</td><td>・+15dB～-79dB(1dB step), -∞dB
(BD37531FV : 0dB～-79dB, -∞dB)
・Possible to use “Advanced switch” for prevention of switching noise.</td></tr>
<tr><td>Loudness</td><td>○</td><td>○</td><td>○</td><td>○</td><td>・0dB～20dB(1dB step)
・fo=250/400/800Hz
・Possible to use “Advanced switch” for prevention of switching noise.</td></tr>
<tr><td>LPF</td><td>×</td><td>○</td><td>○</td><td>○</td><td>・fc=55/85/120/160Hz, pass
・Phase shift (0°/180°)</td></tr>
<tr><td>Mixing</td><td>×</td><td>×</td><td>○</td><td>○</td><td>・Monaural input
・+7dB～-79dB（1dB step）, -∞
・Possible to use “Advanced switch” for prevention of switching noise.</td></tr>
<tr><td>Level meter</td><td>×</td><td>×</td><td>×</td><td>○</td><td>・I2C BUS control
・DC Output</td></tr>
</table>

© 2010 ROHM Co., Ltd. All rights reserved.

Downloaded from Arrow.com.

●**Absolute maximum ratings** (Ta=25℃)

Item	Symbol	Rating	Unit
Power supply Voltage	VCC	10.0	V
Input voltage	Vin	VCC+0.3～GND-0.3	V
Power Dissipation	Pd	1063 ※1	mW
Storage Temperature	Tastg	-55～+150	℃

※This value decreases 8.5mW/℃ for Ta=25℃ or more.
ROHM standard board shall be mounted.
Thermal resistance θja = 117.6(℃/W)
ROHM Standard board
Size：70×70×1.6(㎜³)
Material：A FR4 grass epoxy board(3% or less of copper foil area)

●**Operating conditions**

Item	Symbol	MIN	TYP	MAX	Unit
Power supply Voltage	VCC	7.0	－	9.5	V
Temperature	Topr	-40	－	+85	℃

© 2010 ROHM Co., Ltd. All rights reserved.

Downloaded from Arrow.com.

●Electrical characteristics

(Unless specified particularly, Ta=25℃, VCC=8.5V, f=1kHz, Vin=1Vrms, Rg=600Ω, R_L=10kΩ, A1 input, Input gain 0dB, Mute off, Volume 0dB, Tone control 0dB, Loudness 0dB, LPF OFF(BD37532FV,BD37533FV,BD37534FV), Mixing OFF(BD37533FV,BD37534FV), Fader 0dB)

BLOCK	Item	Symbol	Limit			Unit	Condition
			Min.	Typ.	Max.		
GENERAL	Current upon no signal	I_Q	—	38	48	mA	No signal
	Voltage gain	G_V	-1.5	0	1.5	dB	Gv=20log(VOUT/VIN)
	Channel balance	CB	-1.5	0	1.5	dB	CB = GV1-GV2
	Total harmonic distortion 1 (FRONT,REAR)	THD+N1	—	0.001	0.05	%	VOUT=1Vrms BW=400-30KHz
	Total harmonic distortion 2 (SUBWOOFER)	THD+N2	—	0.002	0.05	%	VOUT=1Vrms BW=400-30KHz
	Output noise voltage 1 (FRONT,REAR) ∗	V_{NO1}	—	3.8	15	μVrms	Rg = 0Ω BW = IHF-A
	Output noise voltage 2 (SUBWOOFER) ∗	V_{NO2}	—	4.8	15	μVrms	Rg = 0Ω BW = IHF-A
	Residual output noise voltage ∗	V_{NOR}	—	1.8	10	μVrms	Fader = -∞dB Rg = 0Ω BW = IHF-A
	Cross-talk between channels ∗	CTC	—	-100	-90	dB	Rg = 0Ω CTC=20log(VOUT/VIN) BW = IHF-A
	Ripple rejection	RR	—	-70	-40	dB	f=1kHz VRR=100mVrms RR=20log(VCC IN/VOUT)
INPUT SELECTOR	Input impedance(A, B, C)	R_{IN_S}	70	100	130	kΩ	
	Input impedance (D, E)	R_{IN_D}	175	250	325	kΩ	
	Maximum input voltage	V_{IM}	2.1	2.3	—	Vrms	VIM at THD+N(VOUT)=1% BW=400-30KHz
	Cross-talk between selectors	CTS	—	-100	-90	dB	Rg = 0Ω CTS=20log(VOUT/VIN) BW = IHF-A
	Common mode rejection ratio ∗ (D, E)	CMRR	50	65	—	dB	XP1 and XN input XP2 and XN input CMRR=20log(VIN/VOUT) BW = IHF-A,[※X・・・D,E]
INPUT GAIN	Minimum input gain	$G_{IN\ MIN}$	-2	0	+2	dB	Input gain 0dB VIN=100mVrms Gin=20log(VOUT/VIN)
	Maximum input gain	$G_{IN\ MAX}$	+18	+20	+22	dB	Input gain +20dB VIN=100mVrms Gin=20log(VOUT/VIN)
	Gain set error	$G_{IN\ ERR}$	-2	0	+2	dB	GAIN=+20～+1dB
MUTE	Mute attenuation ∗	G_{MUTE}	—	-105	-85	dB	Mute ON Gmute=20log(VOUT/VIN) BW = IHF-A
VOLUME	Maximum gain	$G_{V\ MAX}$	13	15	17	dB	Volume = 15dB VIN=100mVrms Gv=20log(VOUT/VIN)
	Maximum attenuation ∗	$G_{V\ MIN}$	—	-100	-85	dB	Volume = -∞dB Gv=20log(VOUT/VIN) BW = IHF-A
	Attenuation set error 1	$G_{V\ ERR1}$	-2	0	2	dB	GAIN & ATT=+15dB～-15dB
	Attenuation set error 2	$G_{V\ ERR2}$	-3	0	3	dB	ATT=-16dB～-47dB
	Attenuation set error 3	$G_{V\ ERR3}$	-4	0	4	dB	ATT=-48dB～-79dB

© 2010 ROHM Co., Ltd. All rights reserved.

Downloaded from Arrow.com.

BLOCK	Item	Symbol	Limit Min.	Limit Typ.	Limit Max.	Unit	Condition
BASS	Maximum boost gain	$G_{B\ BST}$	18	20	22	dB	Gain=+20dB f=100Hz VIN=100mVrms G_B=20log (VOUT/VIN)
	Maximum cut gain	$G_{B\ CUT}$	-22	-20	-18	dB	Gain=-20dB f=100Hz VIN=2Vrms G_B=20log (VOUT/VIN)
	Gain set error	$G_{B\ ERR}$	-2	0	2	dB	Gain=-20～+20dB f=100Hz
MIDDLE	Maximum boost gain	$G_{M\ BST}$	18	20	22	dB	Gain=+20dB f=1kHz VIN=100mVrms G_M=20log (VOUT/VIN)
	Maximum cut gain	$G_{M\ CUT}$	-22	-20	-18	dB	Gain=-20dB f=1kHz VIN=2Vrms G_M=20log (VOUT/VIN)
	Gain set error	$G_{M\ ERR}$	-2	0	2	dB	Gain=-20～+20dB f=1kHz
TREBLE	Maximum boost gain	$G_{T\ BST}$	17	20	23	dB	Gain=+20dB f=10kHz VIN=100mVrms G_T=20log (VOUT/VIN)
	Maximum cut gain	$G_{T\ CUT}$	-23	-20	-17	dB	Gain=-20dB f=10kHz VIN=2Vrms G_T=20log (VOUT/VIN)
	Gain set error	$G_{T\ ERR}$	-2	0	2	dB	Gain=-20～+20dB f=10kHz
MIXING (BD37533FV, BD37534FV)	Input impedance	R_{IN_M}	19	27	35	kΩ	
	Maximum input voltage	V_{IM_M}	2.0	2.2	—	Vrms	VIM at THD+N(VOUT)=1% BW=400-30KHz
	Maximum attenuation	$G_{MX\ MIN}$	—	-100	-85	dB	MIX=OFF G_{MX}=20log(VOUT/VIN) BW=INF-A
	Maximum gain	$G_{MX\ MAX}$	5	7	9	dB	ATT=+6dB G_{MX}=20log(VOUT/VIN)
FADER / SUBWOOFER	Maximum boost gain (BD37532FV,BD37533FV,BD37534FV)	$G_{F\ BST}$	13	15	17	dB	Fader=15dB V_{IN}=100mVrms G_F=20log(VOUT/VIN)
	Maximum attenuation *	$G_{F\ MIN}$	—	-100	-90	dB	Fader = -∞dB G_F=20log(VOUT/VIN) BW = IHF-A
	Gain set error (BD37532FV,BD37533FV,BD37534FV)	$G_{F\ ERR}$	-2	0	2	dB	Gain=+1～+15dB
	Attenuation set error 1	$G_{F\ ERR1}$	-2	0	2	dB	ATT=-1～-15dB
	Attenuation set error 2	$G_{F\ ERR2}$	-3	0	3	dB	ATT=-16～-47dB
	Attenuation set error 3	$G_{F\ ERR3}$	-4	0	4	dB	ATT=-48～-79dB
	Output impedance	R_{OUT}	-	—	50	Ω	VIN=100mVrms
	Maximum output voltage	V_{OM}	2	2.2	—	Vrms	THD+N=1% BW=400-30KHz
LOUDNESS	Maximum gain	$G_{L\ MAX}$	17	20	23	dB	Gain 20dB VIN=100mVrms G_L=20log(VOUT/VIN)
	Gain set error	$G_{L\ ERR}$	-2	0	2	dB	GAIN=+20～+1dB
Level meter (BD37534FV)	Maximum output voltage	$V_{L\ MAX}$	2.8	3.1	3.5	V	
	Output offset voltage	$V_{L\ OFF}$	-	0	100	mV	

VP-9690A(Average value detection, effective value display) filter by Matsushita Communication is used for * measurement.
Phase between input / output is same.

© 2010 ROHM Co., Ltd. All rights reserved.

Downloaded from Arrow.com.

●Electrical characteristic curves (Reference data)

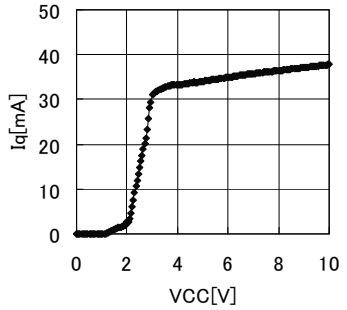

Fig.1 Iq vs Vcc

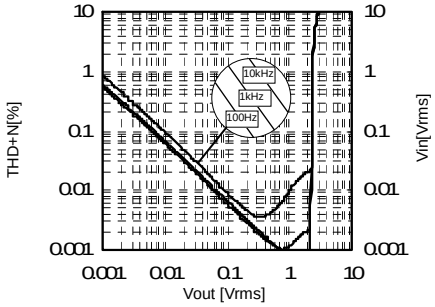

Fig.2 Thd vs Vo

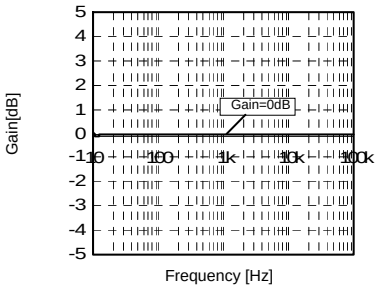

Fig.3 Gain vs Freq

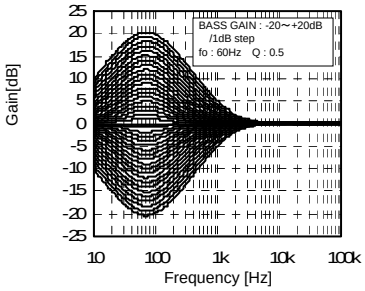

Fig.4 Bass Gain vs Freq

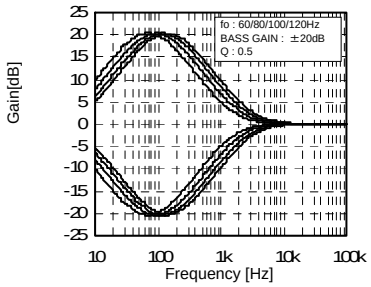

Fig.5 Bass fo vs Freq

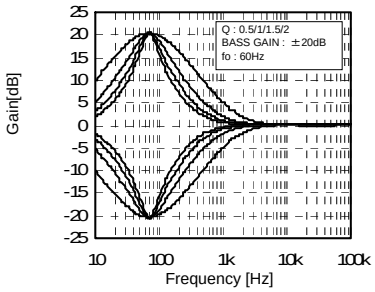

Fig.6 Bass Q vs Freq

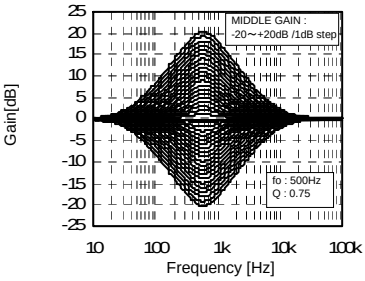

Fig.7 Middle Gain vs Freq

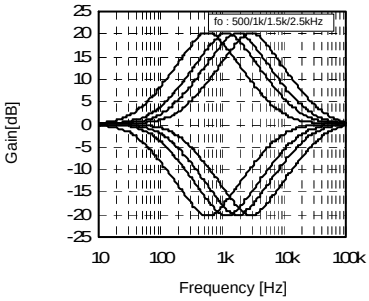

Fig.8 Middle fo vs Freq

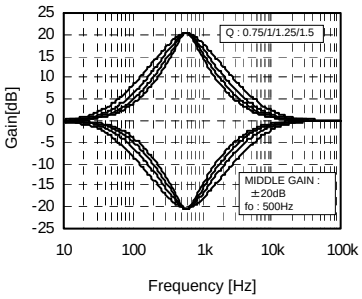

Fig.9 Middle Q vs Freq

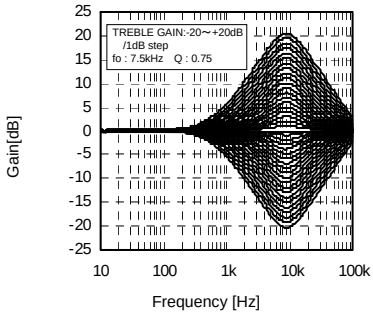

Fig.10 Treble Gain vs Freq

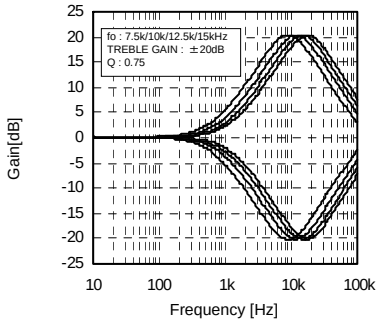

Fig.11 Treble fo vs Freq

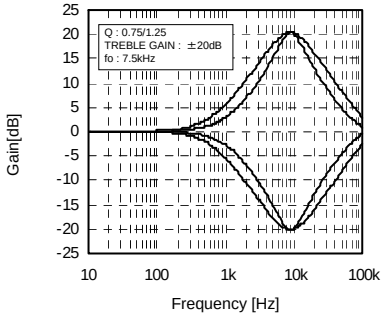

Fig.12Treble Q vs Freq

© 2010 ROHM Co., Ltd. All rights reserved.

Downloaded from Arrow.com.

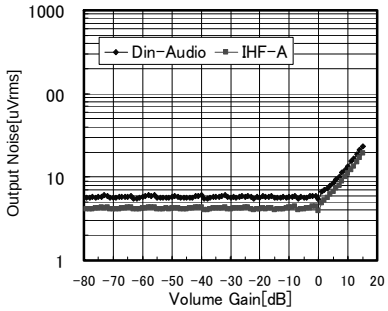

Fig.13 Volume Gain vs Noise

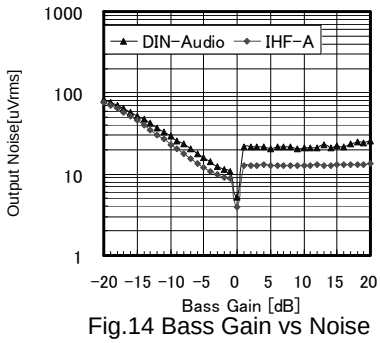

Fig.14 Bass Gain vs Noise

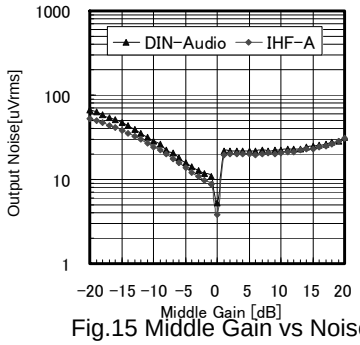

Fig.15 Middle Gain vs Noise

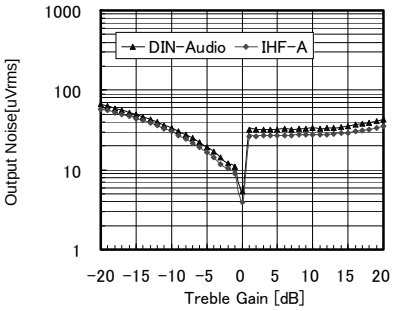

Fig.16 Treble Gain vs Noise

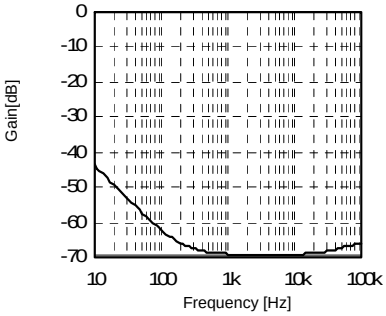

Fig.17 CMRR vs Freq

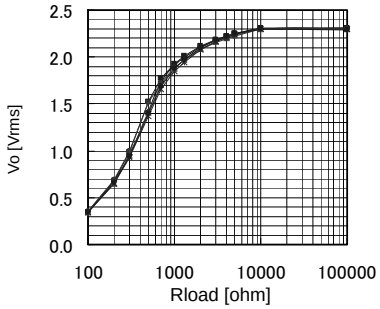

Fig.18 Rload vs Vo

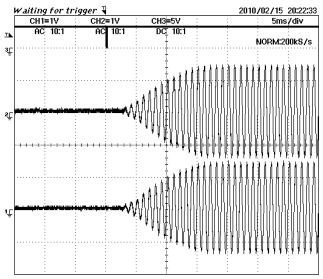

Fig.19 Advanced Switch 1

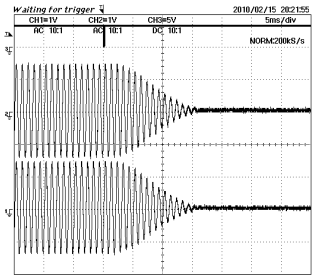

Fig.20 Advanced Switch 2

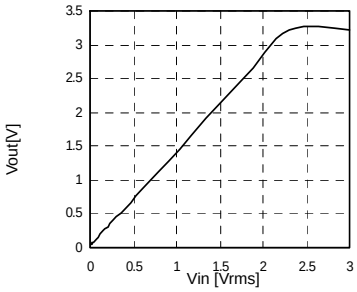

Fig.21 Level Meter Vin vs Vo

Fig.21 : Level Meter function is available only BD37534FV

© 2010 ROHM Co., Ltd. All rights reserved.

Downloaded from Arrow.com.

●Block diagram and pin configuration

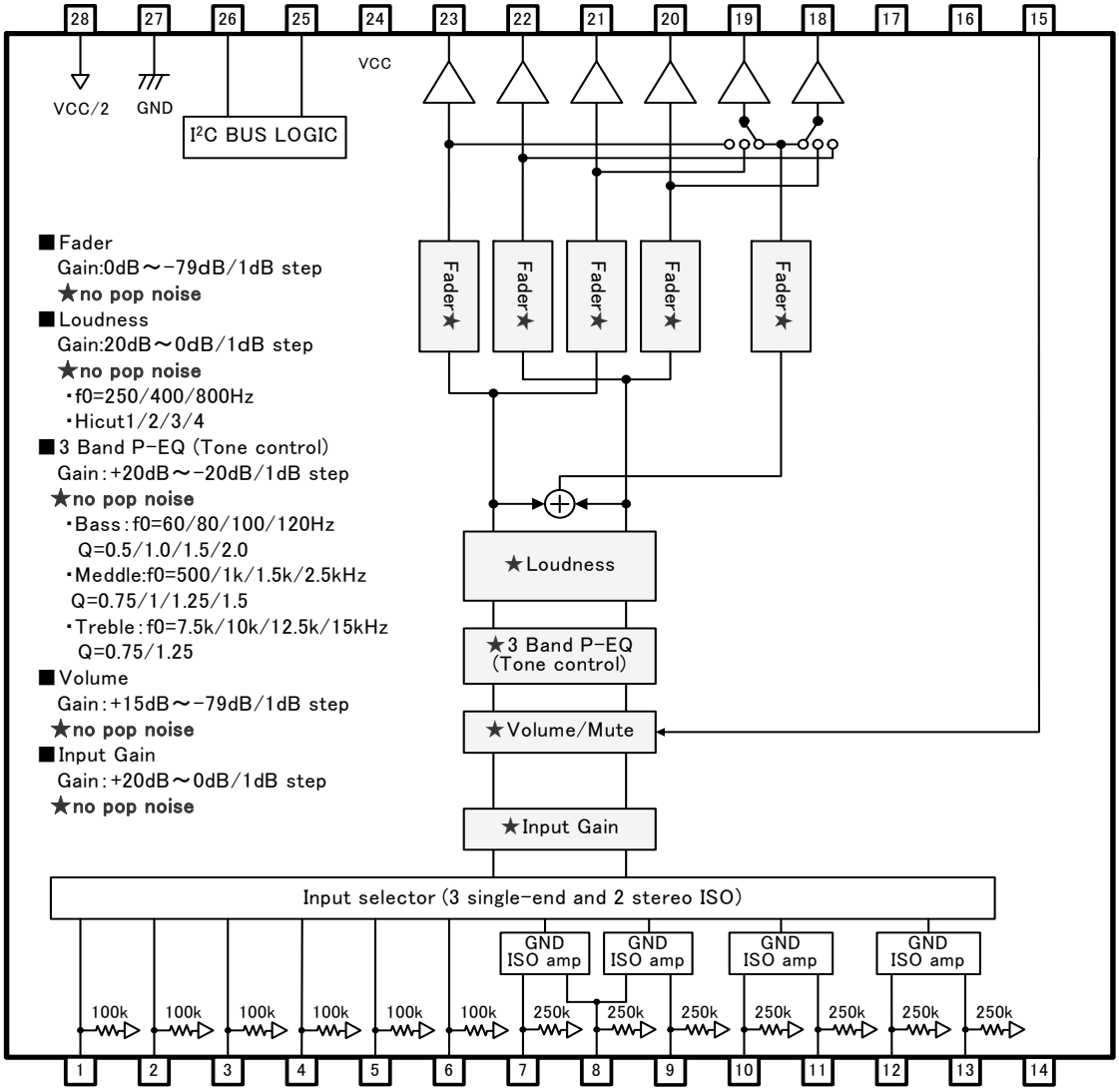

Fig.22 BD37531FV

Descriptions of terminal

Terminal No.	Terminal Name	Description	Terminal No.	Terminal Name	Description
1	A1	A input terminal of 1ch	15	MUTE	External compulsory mute terminal
2	A2	A input terminal of 2ch	16	TEST2	Test Pin
3	B1	B input terminal of 1ch	17	TEST3	Test Pin
4	B2	B input terminal of 2ch	18	OUTS2	Subwoofer output terminal of 2ch
5	C1	C input terminal of 1ch	19	OUTS1	Subwoofer output terminal of 1ch
6	C2	C input terminal of 2ch	20	OUTR2	Rear output terminal of 2ch
7	DP1	D positive input terminal of 1ch	21	OUTR1	Rear output terminal of 1ch
8	DN	D negative input terminal	22	OUTF2	Front output terminal of 2ch
9	DP2	D positive input terminal of 2ch	23	OUTF1	Front output terminal of 1ch
10	EP1	E positive input terminal of 1ch	24	VCC	Power supply terminal
11	EN1	E negative input terminal of 1ch	25	SCL	I²C Communication clock terminal
12	EN2	E negative input terminal of 2ch	26	SDA	I²C Communication data terminal
13	EP2	E positive input terminal of 2ch	27	GND	GND terminal
14	TEST1	Test Pin	28	FIL	VCC/2 terminal

© 2010 ROHM Co., Ltd. All rights reserved.

Downloaded from Arrow.com.

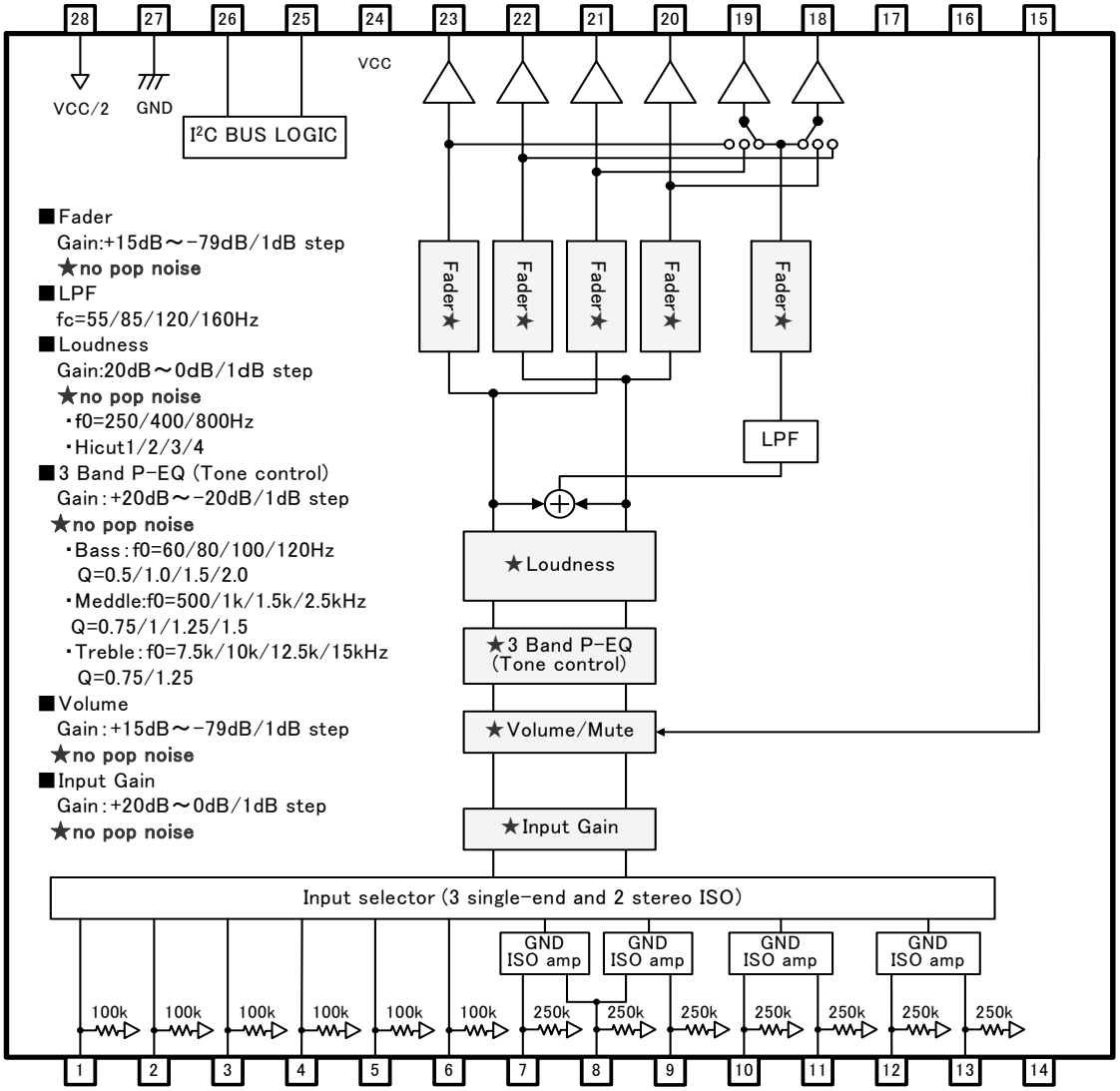

Fig.23 BD37532FV

Descriptions of terminal

Terminal No.	Terminal Name	Description	Terminal No.	Terminal Name	Description
1	A1	A input terminal of 1ch	15	MUTE	External compulsory mute terminal
2	A2	A input terminal of 2ch	16	TEST2	Test Pin
3	B1	B input terminal of 1ch	17	TEST3	Test Pin
4	B2	B input terminal of 2ch	18	OUTS2	Subwoofer output terminal of 2ch
5	C1	C input terminal of 1ch	19	OUTS1	Subwoofer output terminal of 1ch
6	C2	C input terminal of 2ch	20	OUTR2	Rear output terminal of 2ch
7	DP1	D positive input terminal of 1ch	21	OUTR1	Rear output terminal of 1ch
8	DN	D negative input terminal	22	OUTF2	Front output terminal of 2ch
9	DP2	D positive input terminal of 2ch	23	OUTF1	Front output terminal of 1ch
10	EP1	E positive input terminal of 1ch	24	VCC	Power supply terminal
11	EN1	E negative input terminal of 1ch	25	SCL	I²C Communication clock terminal
12	EN2	E negative input terminal of 2ch	26	SDA	I²C Communication data terminal
13	EP2	E positive input terminal of 2ch	27	GND	GND terminal
14	TEST1	Test Pin	28	FIL	VCC/2 terminal

© 2010 ROHM Co., Ltd. All rights reserved.

Downloaded from Arrow.com.

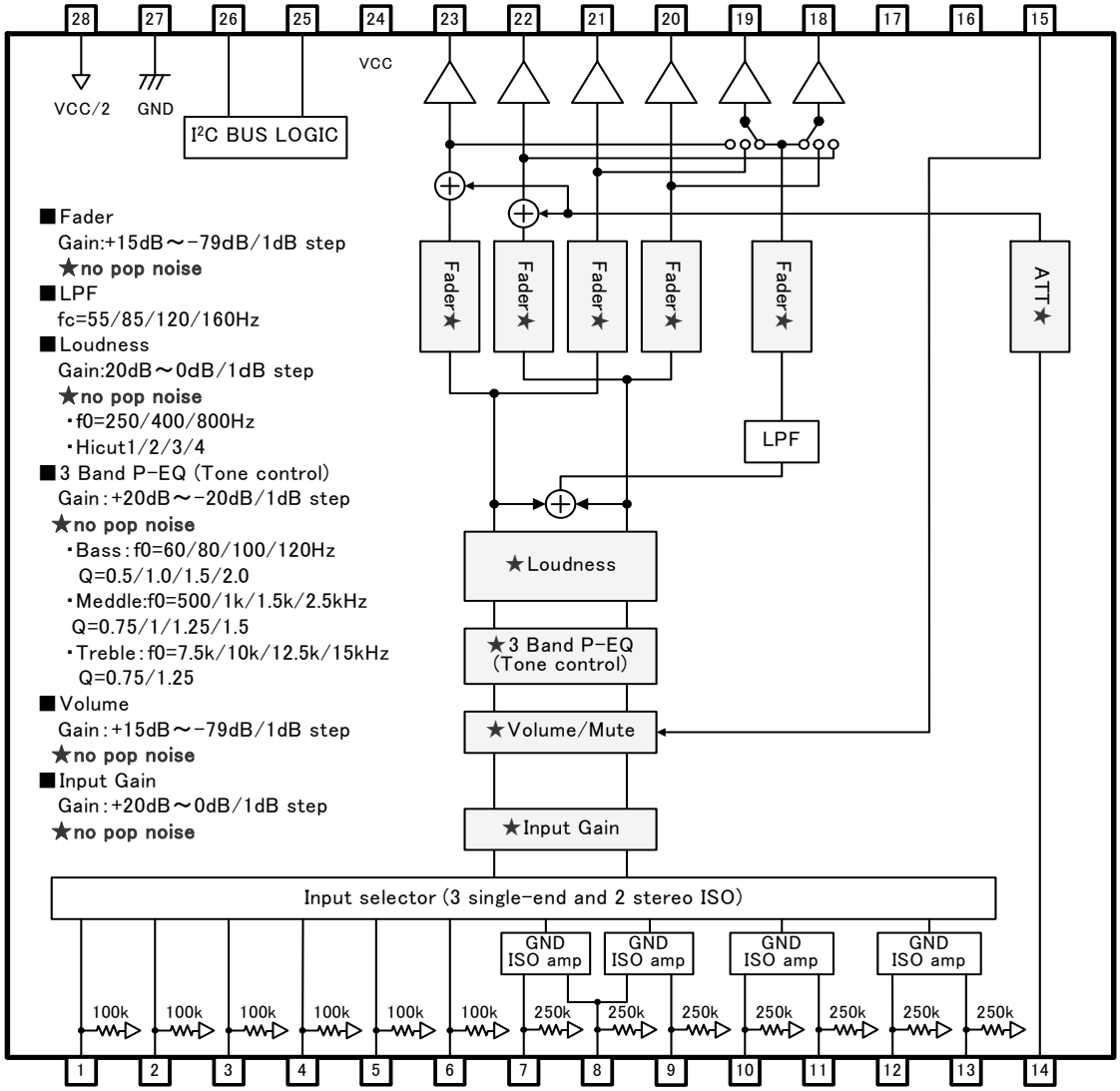

Fig.24 BD37533FV

Descriptions of terminal

Terminal No.	Terminal Name	Description	Terminal No.	Terminal Name	Description
1	A1	A input terminal of 1ch	15	MUTE	External compulsory mute terminal
2	A2	A input terminal of 2ch	16	TEST1	Test Pin
3	B1	B input terminal of 1ch	17	TEST2	Test Pin
4	B2	B input terminal of 2ch	18	OUTS2	Subwoofer output terminal of 2ch
5	C1	C input terminal of 1ch	19	OUTS1	Subwoofer output terminal of 1ch
6	C2	C input terminal of 2ch	20	OUTR2	Rear output terminal of 2ch
7	DP1	D positive input terminal of 1ch	21	OUTR1	Rear output terminal of 1ch
8	DN	D negative input terminal	22	OUTF2	Front output terminal of 2ch
9	DP2	D positive input terminal of 2ch	23	OUTF1	Front output terminal of 1ch
10	EP1	E positive input terminal of 1ch	24	VCC	Power supply terminal
11	EN1	E negative input terminal of 1ch	25	SCL	I²C Communication clock terminal
12	EN2	E negative input terminal of 2ch	26	SDA	I²C Communication data terminal
13	EP2	E positive input terminal of 2ch	27	GND	GND terminal
14	MIN	Mixing input terminal	28	FIL	VCC/2 terminal

© 2010 ROHM Co., Ltd. All rights reserved.

Downloaded from Arrow.com.

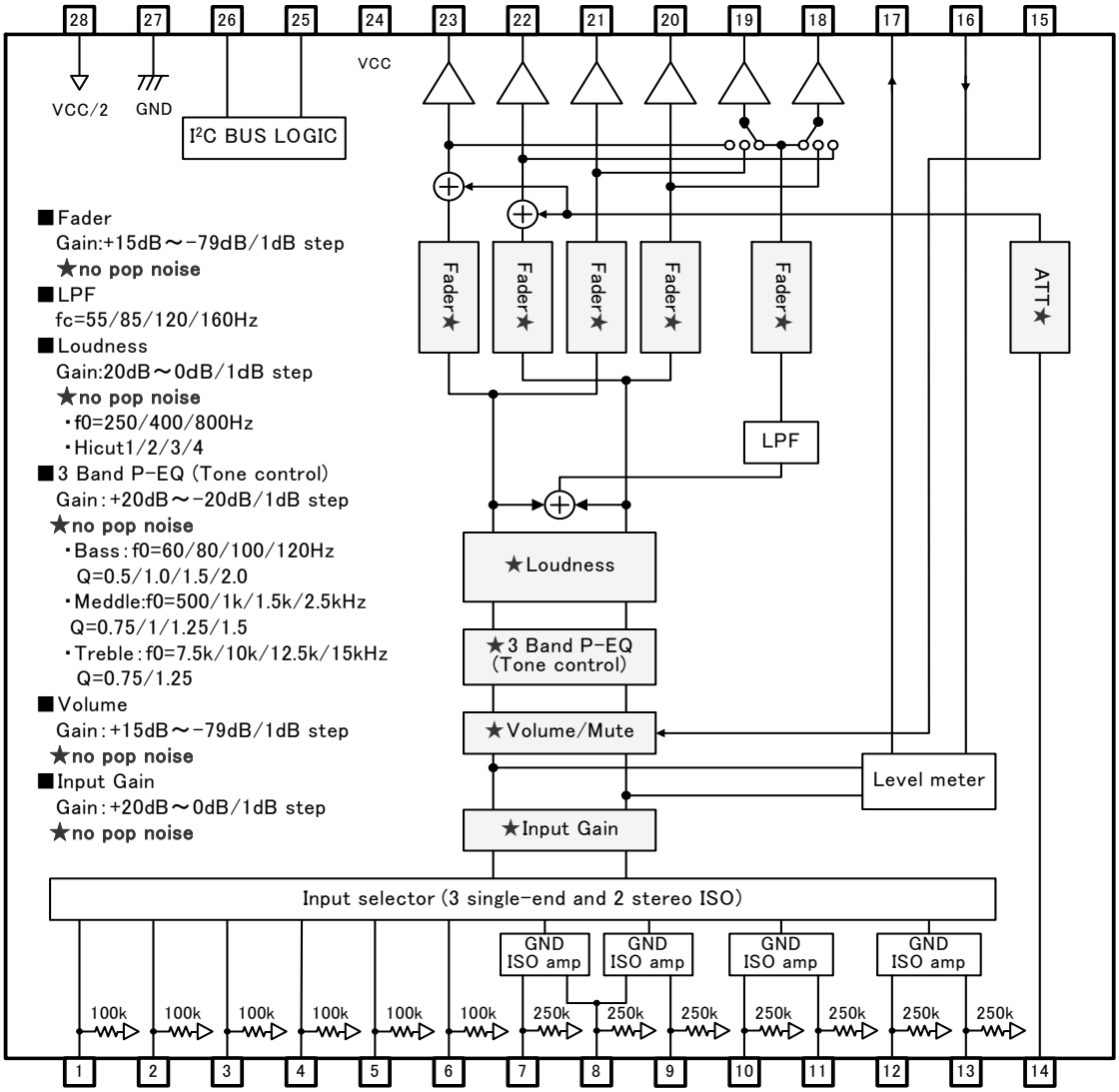

Fig.25 BD37534FV

Descriptions of terminal

Terminal No.	Terminal Name	Description	Terminal No.	Terminal Name	Description
1	A1	A input terminal of 1ch	15	MUTE	External compulsory mute terminal
2	A2	A input terminal of 2ch	16	LRST	Level meter reset terminal
3	B1	B input terminal of 1ch	17	LOUT	Output terminal for Level meter
4	B2	B input terminal of 2ch	18	OUTS2	Subwoofer output terminal of 2ch
5	C1	C input terminal of 1ch	19	OUTS1	Subwoofer output terminal of 1ch
6	C2	C input terminal of 2ch	20	OUTR2	Rear output terminal of 2ch
7	DP1	D positive input terminal of 1ch	21	OUTR1	Rear output terminal of 1ch
8	DN	D negative input terminal	22	OUTF2	Front output terminal of 2ch
9	DP2	D positive input terminal of 2ch	23	OUTF1	Front output terminal of 1ch
10	EP1	E positive input terminal of 1ch	24	VCC	Power supply terminal
11	EN1	E negative input terminal of 1ch	25	SCL	I²C Communication clock terminal
12	EN2	E negative input terminal of 2ch	26	SDA	I²C Communication data terminal
13	EP2	E positive input terminal of 2ch	27	GND	GND terminal
14	MIN	Mixing input terminal	28	FIL	VCC/2 terminal

© 2010 ROHM Co., Ltd. All rights reserved.

Downloaded from Arrow.com.

●Timming Chart

CONTROL SIGNAL SPECIFICATION

(1) Electrical specifications and timing for bus lines and I/O stages

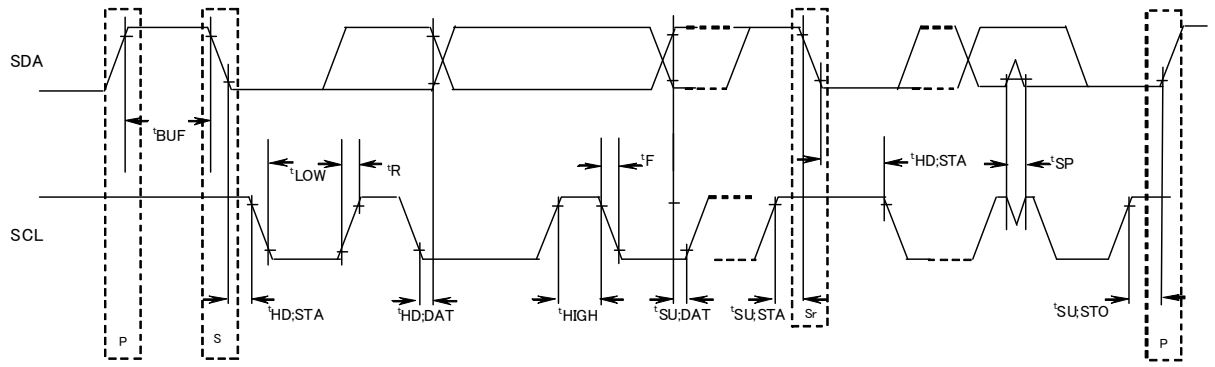

Fig.26 Definition of timing on the I^2C-bus

Table 1 Characteristics of the SDA and SCL bus lines for I^2C-bus devices
(Unless specified particularly, Ta=25℃, VCC=8.5V)

Parameter		Symbol	Fast-mode I^2C-bus		Unit
			Min.	Max.	
1	SCL clock frequency	f SCL	0	400	kHz
2	Bus free time between a STOP and START condition	tBUF	1.3	—	μS
3	Hold time (repeated) START condition. After this period, the first clock pulse is generated	tHD;STA	0.6	—	μS
4	LOW period of the SCL clock	tLOW	1.3	—	μS
5	HIGH period of the SCL clock	tHIGH	0.6	—	μS
6	Set-up time for a repeated START condition	tSU;STA	0.6	—	μS
7	Data hold time:	tHD;DAT	0.06*	—	μS
8	Data set-up time	tSU;DAT	120	—	ns
9	Set-up time for STOP condition	tSU;STO	0.6	—	μS

All values referred to VIH min. and VIL max. Levels (see Table 2).

* A device must internally provide a hold time of at least 300 ns for the SDA signal (referred to the VIH min. of the SCL signal) in order to bridge the undefined region of the falling edge of SCL.
About 7(tHD;DAT), 8(tSU;DAT), make it the setup which a margin is fully in .

© 2010 ROHM Co., Ltd. All rights reserved.

Downloaded from Arrow.com.

Table 2 Characteristics of the SDA and SCL I/O stages for I^2C-bus devices

Parameter		Symbol	Fast-mode devices		Unit
			Min.	Max.	
10	LOW level input voltage:	VIL	-0.3	1	V
11	HIGH level input voltage:	VIH	2.3	5	V
12	Pulse width of spikes which must be suppressed by the input filter.	tSP	0	50	ns
13	LOW level output voltage: at 3mA sink current	VOL1	0	0.4	V
14	Input current each I/O pin with an input voltage between 0.4V and 4.5V.	Ii	-10	10	μA

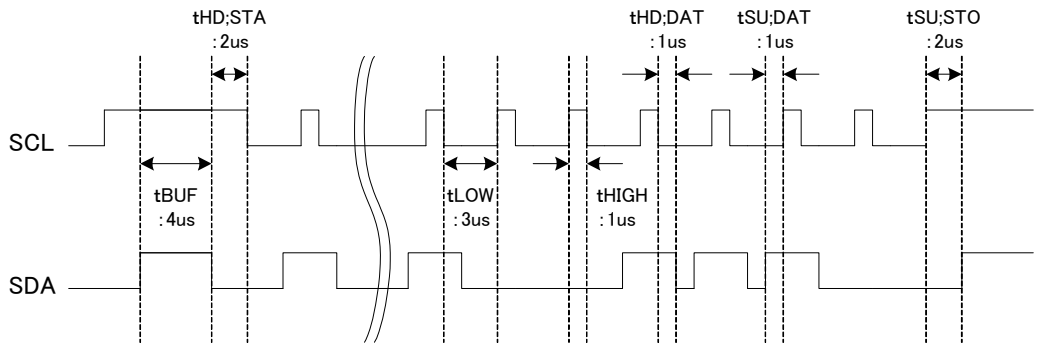

SCL clock frequency:250kHz

Fig.27 A command timing example in the I2C data transmission

© 2010 ROHM Co., Ltd. All rights reserved.

Downloaded from Arrow.com.

(2) I²C BUS FORMAT

	MSB LSB		MSB LSB		MSB LSB		
S	Slave Address	A	Select Address	A	Data	A	P
1bit	8bit	1bit	8bit	1bit	8bit	1bit	1bit

S = Start conditions (Recognition of start bit)
Slave Address = Recognition of slave address. 7 bits in upper order are voluntary. The least significant bit is "L" due to writing.
A = ACKNOWLEDGE bit (Recognition of acknowledgement)
Select Address = Select every of volume, bass and treble.
Data = Data on every volume and tone.
P = Stop condition (Recognition of stop bit)

(3) I²C BUS Interface Protocol

1) Basic form

S	Slave Address	A	Select Address	A	Data	A	P
	MSB LSB		MSB LSB		MSB LSB		

2) Automatic increment (Select Address increases (+1) according to the number of data.

S	Slave Address	A	Select Address	A	Data1	A	Data2	A	····	DataN	A	P
	MSB LSB		MSB LSB		MSB LSB		MSB LSB			MSB LSB		

(Example) ①Data1 shall be set as data of address specified by Select Address.
②Data2 shall be set as data of address specified by Select Address +1.
③DataN shall be set as data of address specified by Select Address +N-1.

3) Configuration unavailable for transmission (In this case, only Select Address1 is set.

S	Slave Address	A	Select Address1	A	Data	A	Select Address 2	A	Data	A	P
	MSB LSB		MSB LSB		MSB LSB		MSB LSB		MSB LSB		

(Note) If any data is transmitted as Select Address 2 next to data, it is recognized as data, not as Select Address 2.

(4) Slave address

MSB							LSB	
A6	A5	A4	A3	A2	A1	A0	R/W	
1	0	0	0	0	0	0	0	80H

© 2010 ROHM Co., Ltd. All rights reserved.

Downloaded from Arrow.com.

(5) Select Address & Data

BD37531FV

Items	Select Address (hex)	MSB			Data				LSB
		D7	D6	D5	D4	D3	D2	D1	D0
Initial setup 1	01	Advanced switch ON/OFF	0	Advanced switch time of Input Gain/Volume Tone/Fader/Loudness		0	1	Advanced switch time of Mute	
Initial setup 2	02	0	0	Subwoofer Output Select		0	0	0	0
Initial setup 3	03	0	0	0	Loudness fo		0	0	1
Input Selector	05	Full-diff Type	0	0	Input selector				
Input gain	06	Mute ON/OFF	0	0	Input Gain				
Volume gain	20	Volume Gain / Attenuation							
Fader 1ch Front	28	Fader Attenuation							
Fader 2ch Front	29	Fader Attenuation							
Fader 1ch Rear	2A	Fader Attenuation							
Fader 2ch Rear	2B	Fader Attenuation							
Fader Subwoofer	2C	Fader Attenuation							
Test Mode	30	1	1	1	1	1	1	1	1
Bass setup	41	0	0	Bass fo		0	0	Bass Q	
Middle setup	44	0	0	Middle fo		0	0	Middle Q	
Treble setup	47	0	0	Treble fo		0	0	0	Treble Q
Bass gain	51	Bass Boost/ Cut	0	0	Bass Gain				
Middle gain	54	Middle Boost/ Cut	0	0	Middle Gain				
Treble gain	57	Treble Boost/ Cut	0	0	Treble Gain				
Loudness Gain	75	0	Loudness Hicut		Loudness Gain				
System Reset	FE	1	0	0	0	0	0	0	1

Advanced switch

Note

1. In function changing of the hatching part, it works Advanced switch.

2. Upon continuous data transfer, the Select Address is circulated by the automatic increment function, as shown below.

→01→02→03→05→06→20→28→29→2A→2B→2C

→30→41→44→47→51→54→57→75

3. For the function of input selector and subwoofer output select etc, it is not corresponded for advanced switch. Therefore, please apply mute on the side of a set when changes these setting.

4. When using mute function of this IC at the time of changing input selector, please switch mute ON/OFF for waiting advanced-mute time.

© 2010 ROHM Co., Ltd. All rights reserved.

Downloaded from Arrow.com.

BD37532FV

Items	Select Address (hex)	MSB			Data				LSB
		D7	D6	D5	D4	D3	D2	D1	D0
Initial setup 1	01	Advanced switch ON/OFF	0	Advanced switch time of Input Gain/Volume Tone/Fader/Loudness		0	1	Advanced switch time of Mute	
Initial setup 2	02	LPF Phase	0	Subwoofer Output Select		0	Subwoofer LPF fc		
Initial setup 3	03	0	0	0	Loudness fo		0	0	1
Input Selector	05	Full-diff Type	0	0	Input selector				
Input gain	06	Mute ON/OFF	0	0	Input Gain				
Volume gain	20	Volume Gain / Attenuation							
Fader 1ch Front	28	Fader Gain / Attenuation							
Fader 2ch Front	29	Fader Gain / Attenuation							
Fader 1ch Rear	2A	Fader Gain / Attenuation							
Fader 2ch Rear	2B	Fader Gain / Attenuation							
Fader Subwoofer	2C	Fader Gain / Attenuation							
Test Mode	30	1	1	1	1	1	1	1	1
Bass setup	41	0	0	Bass fo		0	0	Bass Q	
Middle setup	44	0	0	Middle fo		0	0	Middle Q	
Treble setup	47	0	0	Treble fo		0	0	0	Treble Q
Bass gain	51	Bass Boost/ Cut	0	0	Bass Gain				
Middle gain	54	Middle Boost/ Cut	0	0	Middle Gain				
Treble gain	57	Treble Boost/ Cut	0	0	Treble Gain				
Loudness Gain	75	0	Loudness Hicut		Loudness Gain				
System Reset	FE	1	0	0	0	0	0	0	1

Advanced switch

Note

1. In function changing of the hatching part, it works Advanced switch.

2. Upon continuous data transfer, the Select Address is circulated by the automatic increment function, as shown below.

→01→02→03→05→06→20→28→29→2A→2B→2C

→30→41→44→47→51→54→57→75

3. For the function of input selector and subwoofer output select etc, it is not corresponded for advanced switch. Therefore, please apply mute on the side of a set when changes these setting.

4. When using mute function of this IC at the time of changing input selector, please switch mute ON/OFF for waiting advanced-mute time.

© 2010 ROHM Co., Ltd. All rights reserved.

Downloaded from Arrow.com.

BD37533FV

Items	Select Address (hex)	MSB			Data				LSB
		D7	D6	D5	D4	D3	D2	D1	D0
Initial setup 1	01	Advanced switch ON/OFF	0	Advanced switch time of Input Gain/Volume Tone/Fader/Loudness /Mixing		0	1	Advanced switch time of Mute	
Initial setup 2	02	LPF Phase	0	Subwoofer Output Select		0	Subwoofer LPF fc		
Initial setup 3	03	0	0	0	Loudness fo		0	0	1
Input Selector	05	Full-diff Type	0	0	Input selector				
Input gain	06	Mute ON/OFF	0	0	Input Gain				
Volume gain	20	Volume Gain / Attenuation							
Fader 1ch Front	28	Fader Gain / Attenuation							
Fader 2ch Front	29	Fader Gain / Attenuation							
Fader 1ch Rear	2A	Fader Gain / Attenuation							
Fader 2ch Rear	2B	Fader Gain / Attenuation							
Fader Subwoofer	2C	Fader Gain / Attenuation							
Mixing	30	Mixing Gain / Attenuation							
Bass setup	41	0	0	Bass fo		0	0	Bass Q	
Middle setup	44	0	0	Middle fo		0	0	Middle Q	
Treble setup	47	0	0	Treble fo		0	0	0	Treble Q
Bass gain	51	Bass Boost/ Cut	0	0	Bass Gain				
Middle gain	54	Middle Boost/ Cut	0	0	Middle Gain				
Treble gain	57	Treble Boost/ Cut	0	0	Treble Gain				
Loudness Gain	75	0	Loudness Hicut		Loudness Gain				
System Reset	FE	1	0	0	0	0	0	0	1

Advanced switch

Note

1. In function changing of the hatching part, it works Advanced switch.

2. Upon continuous data transfer, the Select Address is circulated by the automatic increment function, as shown below.

→01→02→03→05→06→20→28→29→2A→2B→2C→30→41→44→47→51→54→57→75

3. For the function of input selector and subwoofer output select etc, it is not corresponded for advanced switch. Therefore, please apply mute on the side of a set when changes these setting.

4. When using mute function of this IC at the time of changing input selector, please switch mute ON/OFF for waiting advanced-mute time.

© 2010 ROHM Co., Ltd. All rights reserved.

Downloaded from Arrow.com.

BD37534FV

Items	Select Address (hex)	MSB			Data				LSB
		D7	D6	D5	D4	D3	D2	D1	D0
Initial setup 1	01	Advanced switch ON/OFF	0	Advanced switch time of Input Gain/Volume Tone/Fader/Loudness /Mixing		0	1	Advanced switch time of Mute	
Initial setup 2	02	LPF Phase	Level Meter RESET	Subwoofer Output Select		0	Subwoofer LPF fc		
Initial setup 3	03	0	0	0	Loudness fo		0	0	1
Input Selector	05	Full-diff Type	0	0	Input selector				
Input gain	06	Mute ON/OFF	0	0	Input Gain				
Volume gain	20	Volume Gain / Attenuation							
Fader 1ch Front	28	Fader Gain / Attenuation							
Fader 2ch Front	29	Fader Gain / Attenuation							
Fader 1ch Rear	2A	Fader Gain / Attenuation							
Fader 2ch Rear	2B	Fader Gain / Attenuation							
Fader Subwoofer	2C	Fader Gain / Attenuation							
Mixing	30	Mixing Gain / Attenuation							
Bass setup	41	0	0	Bass fo		0	0	Bass Q	
Middle setup	44	0	0	Middle fo		0	0	Middle Q	
Treble setup	47	0	0	Treble fo		0	0	0	Treble Q
Bass gain	51	Bass Boost/ Cut	0	0	Bass Gain				
Middle gain	54	Middle Boost/ Cut	0	0	Middle Gain				
Treble gain	57	Treble Boost/ Cut	0	0	Treble Gain				
Loudness Gain	75	0	Loudness Hicut		Loudness Gain				
System Reset	FE	1	0	0	0	0	0	0	1

Advanced switch

Note

1. In function changing of the hatching part, it works Advanced switch.

2. Upon continuous data transfer, the Select Address is circulated by the automatic increment function, as shown below.

→01→02→03→05→06→20→28→29→2A→2B→2C

→30→41→44→47→51→54→57→75

3. For the function of input selector and subwoofer output select etc, it is not corresponded for advanced switch. Therefore, please apply mute on the side of a set when changes these setting.

4. When using mute function of this IC at the time of changing input selector, please switch mute ON/OFF for waiting advanced-mute time.

© 2010 ROHM Co., Ltd. All rights reserved.

Downloaded from Arrow.com.

Select address 01 (hex)

Time	MSB		Advanced switch time of Mute					LSB
	D7	D6	D5	D4	D3	D2	D1	D0
0.6msec	Advanced Switch ON/OFF	0	Advanced switch time of Input gain/Volume Tone/Fader/Loudness /Mixing		0	1	0	0
1.0msec							0	1
1.4msec							1	0
3.2msec							1	1

(Mixing is available only BD37533FV, BD37534FV)

Time	MSB		Advanced switch time of Input gain/Volume/Tone/Fader/Loudness/Mixing					LSB
	D7	D6	D5	D4	D3	D2	D1	D0
4.7 msec	Advanced Switch ON/OFF	0	0	0	0	1	Advanced switch Time of Mute	
7.1 msec			0	1				
11.2 msec			1	0				
14.4 msec			1	1				

(Mixing is available only BD37533FV, BD37534FV)

Mode	MSB		Advanced switch ON/OFF					LSB
	D7	D6	D5	D4	D3	D2	D1	D0
OFF	0	0	Advanced switch time of Input gain/Volume Tone/Fader/Loudness /Mixing		0	1	Advanced switch Time of Mute	
ON	1							

(Mixing is available only BD37533FV, BD37534FV)

Select address 02(hex)

fc	MSB		Subwoofer LPF fc					LSB
	D7	D6	D5	D4	D3	D2	D1	D0
OFF	LPF Phase	Level Meter RESET	Subwoofer Output Select		0	0	0	0
55Hz						0	0	1
85Hz						0	1	0
120Hz						0	1	1
160Hz						1	0	0
Prohibition						Other setting		

(Available only BD37532FV, BD37533FV, BD37534FV)

Mode	MSB		Subwoofer Output Select					LSB
	D7	D6	D5	D4	D3	D2	D1	D0
LPF	LPF Phase	Level Meter RESET	0	0	0	Subwoofer LPF fc		
Front			0	1				
Rear			1	0				
Prohibition			1	1				

Mode	MSB		Level Meter RESET					LSB
	D7	D6	D5	D4	D3	D2	D1	D0
HOLD	LPF Phase	0	Subwoofer output select		0	Subwoofer LPF fc		
RESET		1						

(Available only BD37534FV)

Phase	MSB		LPF Phase					LSB
	D7	D6	D5	D4	D3	D2	D1	D0
0°	0	Level Meter RESET	Subwoofer output select		0	Subwoofer LPF fc		
180°	1							

(Available only BD37532FV, BD37533FV, BD37534FV)

: Initial Condition

© 2010 ROHM Co., Ltd. All rights reserved.

Downloaded from Arrow.com.

Select address 03(hex)

f0	MSB			Loudness fo				LSB
	D7	D6	D5	D4	D3	D2	D1	D0
250Hz	0	0	0	0	0	0	0	1
400Hz				0	1			
800Hz				1	0			
Prohibition				1	1			

Select address 05(hex)

Mode			MSB			Input Selector				LSB
	OUTF1	OUTF2	D7	D6	D5	D4	D3	D2	D1	D0
A	A1	A2	Full-diff bias type select	0	0	0	0	0	0	0
B	B1	B2				0	0	0	0	1
C	C1	C2				0	0	0	1	0
D single	DP1	DP2				0	0	0	1	1
E1 single	EP1	EN1				0	1	0	1	0
E2 single	EN2	EP2				0	1	0	1	1
A diff	A1	B1				0	1	1	1	1
C diff	B2	C2				1	0	0	0	0
D diff	DP1	DP2				0	0	1	1	0
E full diff	EP1	EP2				0	1	0	0	0
Input SHORT						0	1	0	0	1
Prohibition						Other setting				

Input SHORT : The input impedance of each input terminal is lowered from 100kΩ(TYP) to 6 kΩ(TYP).
(For quick charge of coupling capacitor)

Mode	MSB			Full-diff Bias Type Select				LSB
	D7	D6	D5	D4	D3	D2	D1	D0
Negative Input	0	0	0	0	Input Selector			
Bias	1							

: Initial condition

Negative input type

For Ground - isolation type)

Bias type

For differential amplifier type

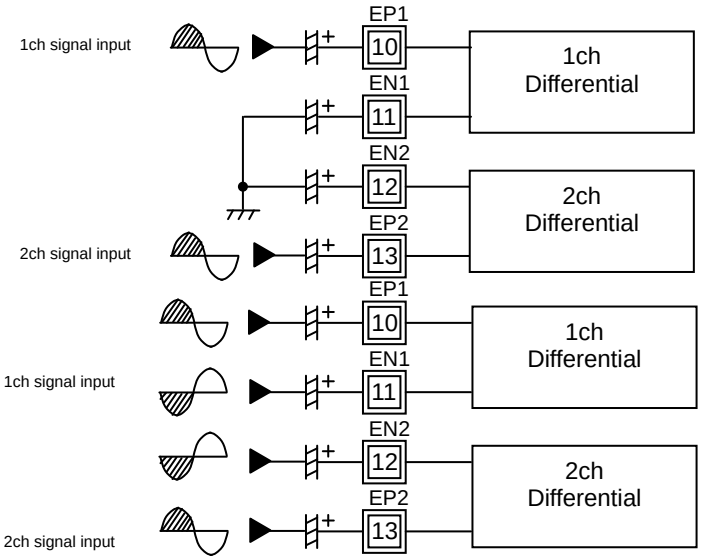

© 2010 ROHM Co., Ltd. All rights reserved.

Downloaded from Arrow.com.

Select address 06 (hex)

Gain	MSB			Input Gain				LSB
	D7	D6	D5	D4	D3	D2	D1	D0
0dB	Mute ON/OFF	0	0	0	0	0	0	0
1dB				0	0	0	0	1
2dB				0	0	0	1	0
3dB				0	0	0	1	1
4dB				0	0	1	0	0
5dB				0	0	1	0	1
6dB				0	0	1	1	0
7dB				0	0	1	1	1
8dB				0	1	0	0	0
9dB				0	1	0	0	1
10dB				0	1	0	1	0
11dB				0	1	0	1	1
12dB				0	1	1	0	0
13dB				0	1	1	0	1
14dB				0	1	1	1	0
15dB				0	1	1	1	1
16dB				1	0	0	0	0
17dB				1	0	0	0	1
18dB				1	0	0	1	0
19dB				1	0	0	1	1
20dB				1	0	1	0	0
Prohibition				1	1	0	1	1
				:	:	:	:	:
				1	1	1	1	1

Mode	MSB			Mute ON/OFF				LSB
	D7	D6	D5	D4	D3	D2	D1	D0
OFF	0	0	0	Input Gain				
ON	1							

: Initial condition

© 2010 ROHM Co., Ltd. All rights reserved.

Downloaded from Arrow.com.

Select address 20, 28, 29, 2A, 2B, 2C (hex)

Gain & ATT	MSB	Vol, Fader Gain / Attenuation						LSB
	D7	D6	D5	D4	D3	D2	D1	D0
Prohibition	0	0	0	0	0	0	0	0
	0	0	0	0	0	0	0	1
	:	:	:	:	:	:	:	:
	0	1	1	1	0	0	0	0
15dB	0	1	1	1	0	0	0	1
14dB	0	1	1	1	0	0	1	0
13dB	0	1	1	1	0	0	1	1
:	:	:	:	:	:	:	:	:
-77dB	1	1	0	0	1	1	0	1
-78dB	1	1	0	0	1	1	1	0
-79dB	1	1	0	0	1	1	1	1
Prohibition	1	1	0	1	0	0	0	0
	:	:	:	:	:	:	:	:
	1	1	1	1	1	1	1	0
-∞dB	1	1	1	1	1	1	1	1

(About BD37531FV, only 0dB～-∞dB are available)

Select address 30(hex)

Gain & ATT	MSB	Mixing Gain / Attenuation						LSB
	D7	D6	D5	D4	D3	D2	D1	D0
Prohibition	0	0	0	0	0	0	0	0
	0	0	0	0	0	0	0	1
	:	:	:	:	:	:	:	:
	0	1	1	1	1	0	0	0
7dB	0	1	1	1	1	0	0	1
6dB	0	1	1	1	1	0	1	0
5dB	0	1	1	1	1	0	1	1
:	:	:	:	:	:	:	:	:
-77dB	1	1	0	0	1	1	0	1
-78dB	1	1	0	0	1	1	1	0
-79dB	1	1	0	0	1	1	1	1
Prohibition	1	1	0	1	0	0	0	0
	:	:	:	:	:	:	:	:
	1	1	1	1	1	1	1	0
MIX OFF	1	1	1	1	1	1	1	1

(Available only BD37533FV, BD37534FV)

: Initial condition

© 2010 ROHM Co., Ltd. All rights reserved.

Downloaded from Arrow.com.

Select address 41(hex)

Q factor	MSB							LSB
	Bass Q factor							
	D7	D6	D5	D4	D3	D2	D1	D0
0.5	0	0	Bass fo		0	0	0	0
1.0							0	1
1.5							1	0
2.0							1	1

fo	MSB							LSB
	Bass fo							
	D7	D6	D5	D4	D3	D2	D1	D0
60Hz	0	0	0	0	0	0	Bass Q factor	
80Hz			0	1				
100Hz			1	0				
120Hz			1	1				

Select address 44(hex)

Q factor	MSB							LSB
	Middle Q factor							
	D7	D6	D5	D4	D3	D2	D1	D0
0.75	0	0	Middle fo		0	0	0	0
1.0							0	1
1.25							1	0
1.5							1	1

fo	MSB							LSB
	Middle fo							
	D7	D6	D5	D4	D3	D2	D1	D0
500Hz	0	0	0	0	0	0	Middle Q factor	
1kHz			0	1				
1.5kHz			1	0				
2.5kHz			1	1				

Select address 47 (hex)

Q factor	MSB							LSB
	Treble Q factor							
	D7	D6	D5	D4	D3	D2	D1	D0
0.75	0	0	Treble fo		0	0	0	0
1.25								1

fo	MSB							LSB
	Treble fo							
	D7	D6	D5	D4	D3	D2	D1	D0
7.5kHz	0	0	0	0	0	0	0	Treble Q factor
10kHz			0	1				
12.5kHz			1	0				
15kHz			1	1				

: Initial condition

© 2010 ROHM Co., Ltd. All rights reserved.

Downloaded from Arrow.com.

Select address 51, 54, 57 (hex)

Gain	MSB			Bass/Middle/Treble Gain				LSB
	D7	D6	D5	D4	D3	D2	D1	D0
0dB	Bass/ Middle/ Treble Boost /cut	0	0	0	0	0	0	0
1dB				0	0	0	0	1
2dB				0	0	0	1	0
3dB				0	0	0	1	1
4dB				0	0	1	0	0
5dB				0	0	1	0	1
6dB				0	0	1	1	0
7dB				0	0	1	1	1
8dB				0	1	0	0	0
9dB				0	1	0	0	1
10dB				0	1	0	1	0
11dB				0	1	0	1	1
12dB				0	1	1	0	0
13dB				0	1	1	0	1
14dB				0	1	1	1	0
15dB				0	1	1	1	1
16dB				1	0	0	0	0
17dB				1	0	0	0	1
18dB				1	0	0	1	0
19dB				1	0	0	1	1
20dB				1	0	1	0	0
Prohibition				1	0	1	0	1
				:	:	:	:	:
				1	1	1	1	0
				1	1	1	1	1

Mode	MSB			Bass/Middle/Treble Boost/Cut				LSB
	D7	D6	D5	D4	D3	D2	D1	D0
Boost	0	0	0	Bass/Middle/Treble Gain				
Cut	1							

: Initial condition

© 2010 ROHM Co., Ltd. All rights reserved.

Downloaded from Arrow.com.

Select address 75 (hex)

Mode	MSB			Loudness Hicut				LSB
	D7	D6	D5	D4	D3	D2	D1	D0
Hicut1	0	0	0	Loudness Gain				
Hicut2		0	1					
Hicut3		1	0					
Hicut4		1	1					

Gain	MSB			Loudness Gain				LSB
	D7	D6	D5	D4	D3	D2	D1	D0
0dB	0	Loudness Hicut		0	0	0	0	0
1dB				0	0	0	0	1
2dB				0	0	0	1	0
3dB				0	0	0	1	1
4dB				0	0	1	0	0
5dB				0	0	1	0	1
6dB				0	0	1	1	0
7dB				0	0	1	1	1
8dB				0	1	0	0	0
9dB				0	1	0	0	1
10dB				0	1	0	1	0
11dB				0	1	0	1	1
12dB				0	1	1	0	0
13dB				0	1	1	0	1
14dB				0	1	1	1	0
15dB				0	1	1	1	1
16dB				1	0	0	0	0
17dB				1	0	0	0	1
18dB				1	0	0	1	0
19dB				1	0	0	1	1
20dB				1	0	1	0	0
Prohibition				1	0	1	0	1
				:	:	:	:	:
				1	1	1	1	1

: Initial condition

(6) About power on reset

At on of supply voltage circuit made initialization inside IC is built-in. Please send data to all address as initial data at supply voltage on. And please supply mute at set side until this initial data is sent.

Item	Symbol	Limit			Unit	Condition
		Min.	Typ.	Max.		
Rise time of VCC	Trise	33	—	—	usec	VCC rise time from 0V to 5V
VCC voltage of release power on reset	Vpor	—	4.1	—	V	

(7)) About external compulsory mute terminal

Mute is possible forcibly than the outside after input again department, by the setting of the MUTE terminal.

Mute Voltage Condition	Mode
GND～1.0V	MUTE ON
2.3V～VCC	MUTE OFF

Establish the voltage of MUTE in the condition to have been defined.

© 2010 ROHM Co., Ltd. All rights reserved.

Downloaded from Arrow.com.

Volume / Fader volume / Mixing attenuation of the details

(dB)	D7	D6	D5	D4	D3	D2	D1	D0		(dB)	D7	D6	D5	D4	D3	D2	D1	D0
+15	0	1	1	1	0	0	0	1		-33	1	0	1	0	0	0	0	1
+14	0	1	1	1	0	0	1	0		-34	1	0	1	0	0	0	1	0
+13	0	1	1	1	0	0	1	1		-35	1	0	1	0	0	0	1	1
+12	0	1	1	1	0	1	0	0		-36	1	0	1	0	0	1	0	0
+11	0	1	1	1	0	1	0	1		-37	1	0	1	0	0	1	0	1
+10	0	1	1	1	0	1	1	0		-38	1	0	1	0	0	1	1	0
+9	0	1	1	1	0	1	1	1		-39	1	0	1	0	0	1	1	1
+8	0	1	1	1	1	0	0	0		-40	1	0	1	0	1	0	0	0
+7	0	1	1	1	1	0	0	1		-41	1	0	1	0	1	0	0	1
+6	0	1	1	1	1	0	1	0		-42	1	0	1	0	1	0	1	0
+5	0	1	1	1	1	0	1	1		-43	1	0	1	0	1	0	1	1
+4	0	1	1	1	1	1	0	0		-44	1	0	1	0	1	1	0	0
+3	0	1	1	1	1	1	0	1		-45	1	0	1	0	1	1	0	1
+2	0	1	1	1	1	1	1	0		-46	1	0	1	0	1	1	1	0
+1	0	1	1	1	1	1	1	1		-47	1	0	1	0	1	1	1	1
0	1	0	0	0	0	0	0	0		-48	1	0	1	1	0	0	0	0
-1	1	0	0	0	0	0	0	1		-49	1	0	1	1	0	0	0	1
-2	1	0	0	0	0	0	1	0		-50	1	0	1	1	0	0	1	0
-3	1	0	0	0	0	0	1	1		-51	1	0	1	1	0	0	1	1
-4	1	0	0	0	0	1	0	0		-52	1	0	1	1	0	1	0	0
-5	1	0	0	0	0	1	0	1		-53	1	0	1	1	0	1	0	1
-6	1	0	0	0	0	1	1	0		-54	1	0	1	1	0	1	1	0
-7	1	0	0	0	0	1	1	1		-55	1	0	1	1	0	1	1	1
-8	1	0	0	0	1	0	0	0		-56	1	0	1	1	1	0	0	0
-9	1	0	0	0	1	0	0	1		-57	1	0	1	1	1	0	0	1
-10	1	0	0	0	1	0	1	0		-58	1	0	1	1	1	0	1	0
-11	1	0	0	0	1	0	1	1		-59	1	0	1	1	1	0	1	1
-12	1	0	0	0	1	1	0	0		-60	1	0	1	1	1	1	0	0
-13	1	0	0	0	1	1	0	1		-61	1	0	1	1	1	1	0	1
-14	1	0	0	0	1	1	1	0		-62	1	0	1	1	1	1	1	0
-15	1	0	0	0	1	1	1	1		-63	1	0	1	1	1	1	1	1
-16	1	0	0	1	0	0	0	0		-64	1	1	0	0	0	0	0	0
-17	1	0	0	1	0	0	0	1		-65	1	1	0	0	0	0	0	1
-18	1	0	0	1	0	0	1	0		-66	1	1	0	0	0	0	1	0
-19	1	0	0	1	0	0	1	1		-67	1	1	0	0	0	0	1	1
-20	1	0	0	1	0	1	0	0		-68	1	1	0	0	0	1	0	0
-21	1	0	0	1	0	1	0	1		-69	1	1	0	0	0	1	0	1
-22	1	0	0	1	0	1	1	0		-70	1	1	0	0	0	1	1	0
-23	1	0	0	1	0	1	1	1		-71	1	1	0	0	0	1	1	1
-24	1	0	0	1	1	0	0	0		-72	1	1	0	0	1	0	0	0
-25	1	0	0	1	1	0	0	1		-73	1	1	0	0	1	0	0	1
-26	1	0	0	1	1	0	1	0		-74	1	1	0	0	1	0	1	0
-27	1	0	0	1	1	0	1	1		-75	1	1	0	0	1	0	1	1
-28	1	0	0	1	1	1	0	0		-76	1	1	0	0	1	1	0	0
-29	1	0	0	1	1	1	0	1		-77	1	1	0	0	1	1	0	1
-30	1	0	0	1	1	1	1	0		-78	1	1	0	0	1	1	1	0
-31	1	0	0	1	1	1	1	1		-79	1	1	0	0	1	1	1	1
-32	1	0	1	0	0	0	0	0		-∞	1	1	1	1	1	1	1	1

About BD37531FV, Fader Volume only 0dB～-∞dB are available.
Mixing is available only BD37533FV, BD37534FV. Adjustable range is +7dB～-∞dB.

: Initial condition

© 2010 ROHM Co., Ltd. All rights reserved.

Downloaded from Arrow.com.

About Level meter(available only BD37534FV)

(1) The operation of circuit

Level meter is a function which gives DC voltage proportional to the size of signal of sound. It detects the peak level of signal and keeps the peak level, so that it is possible to monitor the size of signal by resetting DC voltage kept with suitable interval.

(2) The way to reset level meter output

Please send reset data through I^2C BUS

When reset output of level meter : Send D6 = " 1 " of select address 02(hex).

When cancel of output reset of level meter (HOLD)… → Send D6 = " 0 " of select address 02(hex).

(3) The settings about period of reset

Peak hold operation will start after HOLD data is transmitted. Set the WAIT time after HOLD data transmission according to the frequency bandwidth detected.

WAIT time must be set to a minimum of one cycle over the detected frequency bandwidth.

Ex) Detected frequency bandwidth is above 40Hz, 『40Hz = 25ms = WAIT time』

Transmission Example by I^2C BUS

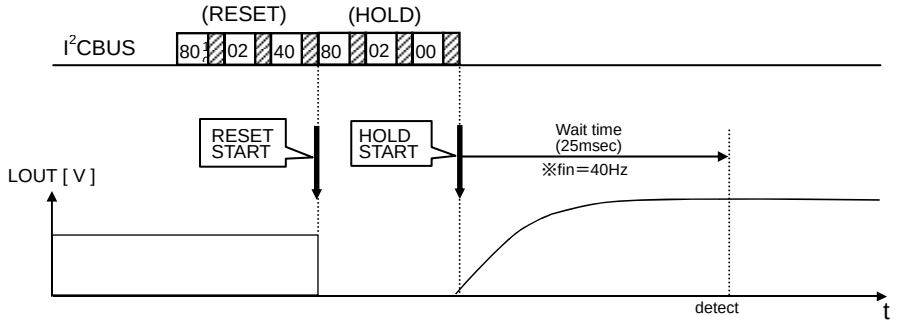

© 2010 ROHM Co., Ltd. All rights reserved.

Downloaded from Arrow.com.

●Application circuit

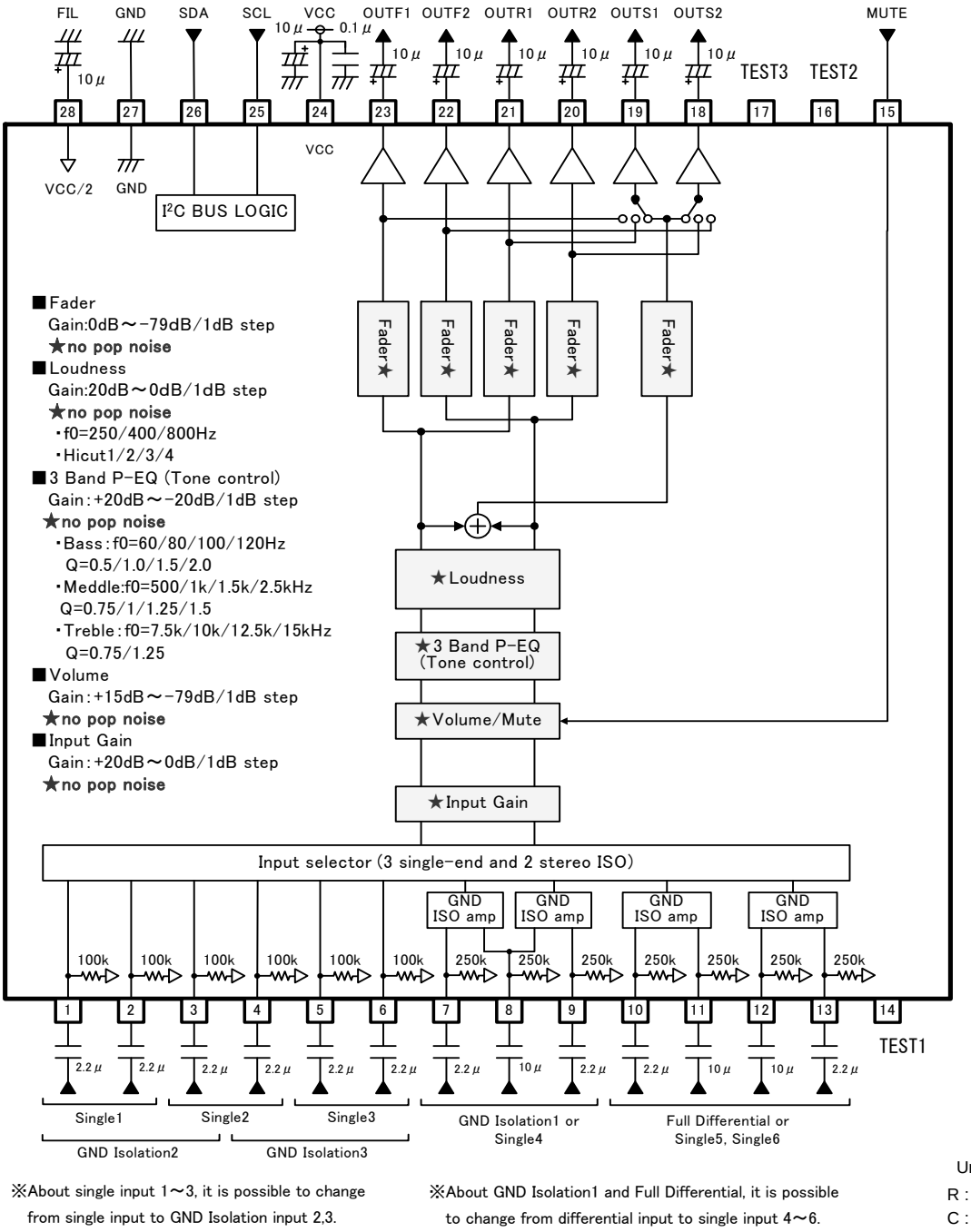

Fig.28 BD37531FV

Notes on wiring

① Please connect the decoupling capacitor of a power supply in the shortest distance as much as possible to GND.
② Lines of GND shall be one-point connected.
③ Wiring pattern of Digital shall be away from that of analog unit and cross-talk shall not be acceptable.
④ Lines of SCL and SDA of I²C BUS shall not be parallel if possible.
The lines shall be shielded, if they are adjacent to each other.
⑤ Lines of analog input shall not be parallel if possible. The lines shall be shielded, if they are adjacent to each other.
⑥ About TEST pin(14,16,17pin), please use with OPEN.

© 2010 ROHM Co., Ltd. All rights reserved.

Downloaded from Arrow.com.

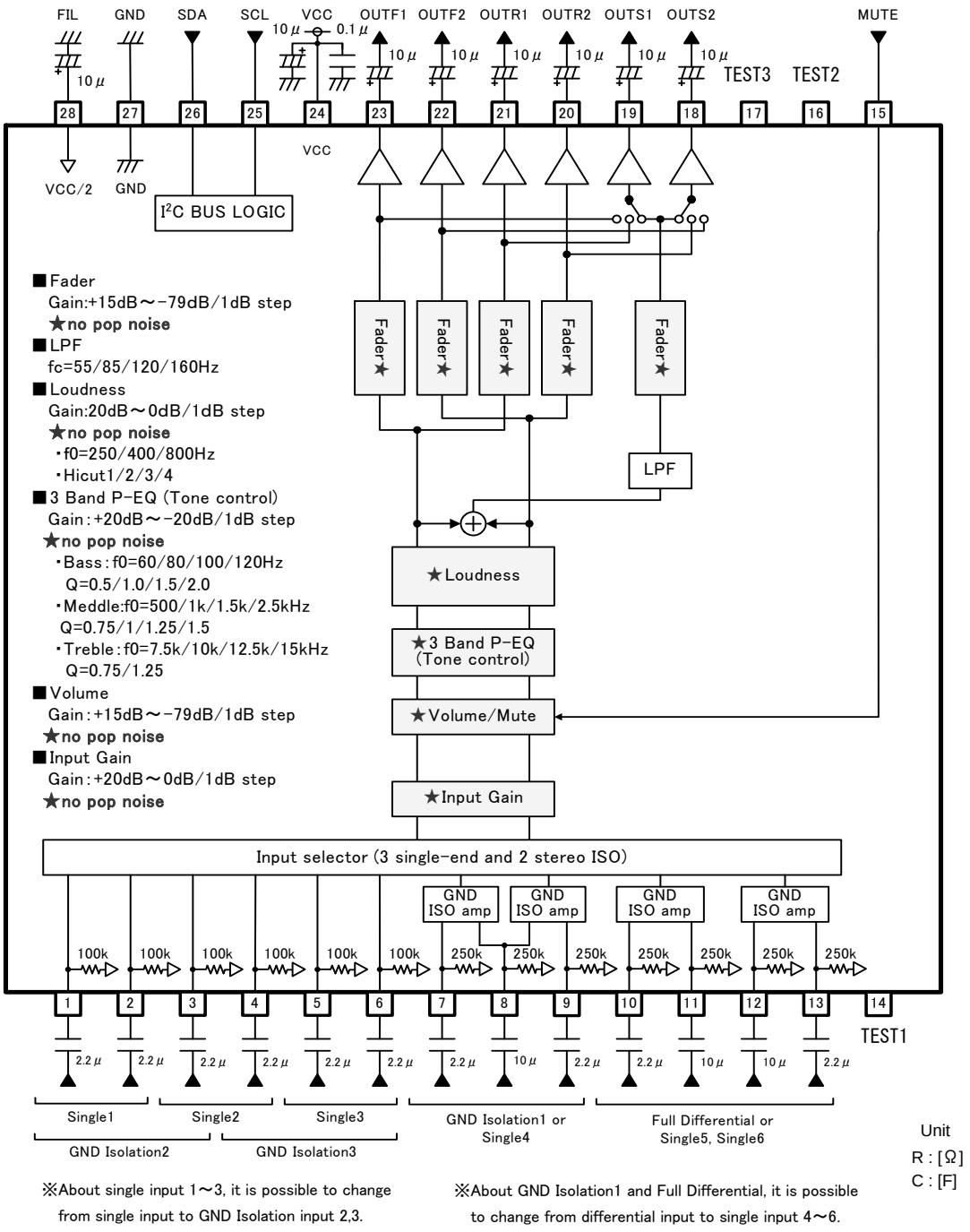

Fig.29 BD37532FV

Notes on wiring

① Please connect the decoupling capacitor of a power supply in the shortest distance as much as possible to GND.
② Lines of GND shall be one-point connected.
③ Wiring pattern of Digital shall be away from that of analog unit and cross-talk shall not be acceptable.
④ Lines of SCL and SDA of I²C BUS shall not be parallel if possible.
The lines shall be shielded, if they are adjacent to each other.
⑤ Lines of analog input shall not be parallel if possible. The lines shall be shielded, if they are adjacent to each other.
⑥ About TEST pin(14,15,16pin), please use with OPEN.

© 2010 ROHM Co., Ltd. All rights reserved.

Downloaded from Arrow.com.

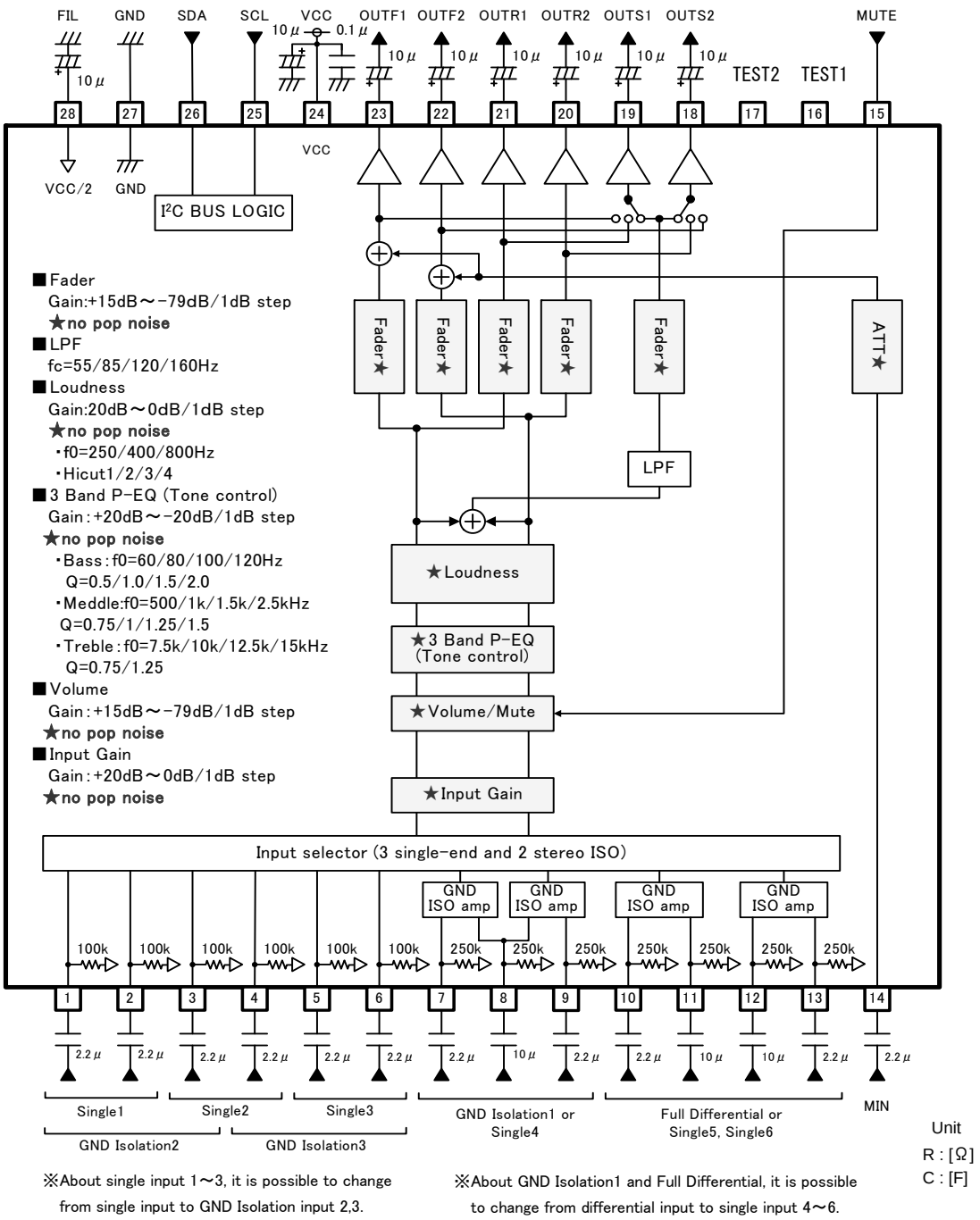

Fig.30 BD37533FV

Notes on wiring

① Please connect the decoupling capacitor of a power supply in the shortest distance as much as possible to GND.
② Lines of GND shall be one-point connected.
③ Wiring pattern of Digital shall be away from that of analog unit and cross-talk shall not be acceptable.
④ Lines of SCL and SDA of I²C BUS shall not be parallel if possible.
The lines shall be shielded, if they are adjacent to each other.
⑤ Lines of analog input shall not be parallel if possible. The lines shall be shielded, if they are adjacent to each other.
⑥ About TEST pin(16,17pin), please use with OPEN.

© 2010 ROHM Co., Ltd. All rights reserved.

Downloaded from Arrow.com.

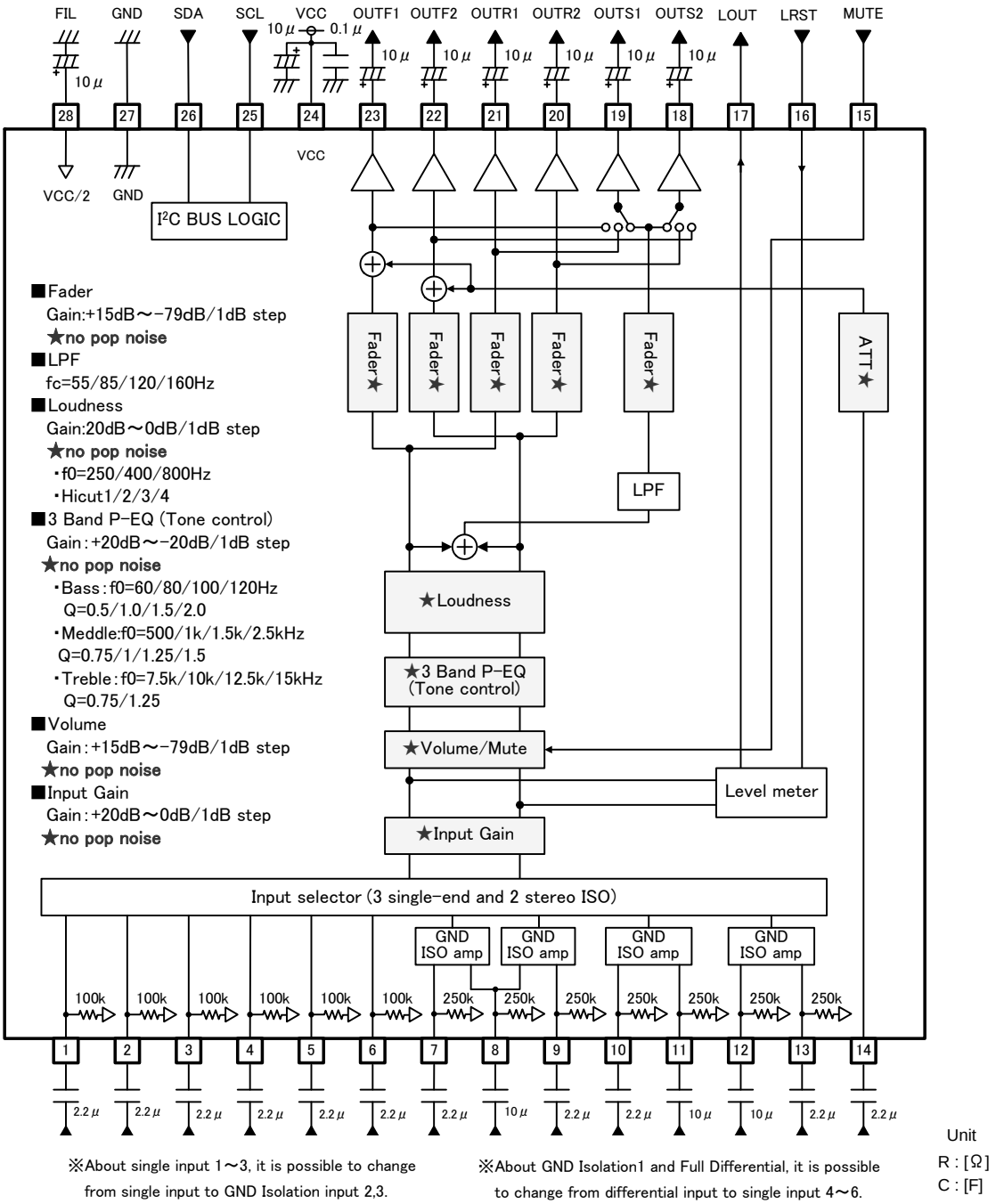

Fig. 31 BD37534FV

Notes on wiring

① Please connect the decoupling capacitor of a power supply in the shortest distance as much as possible to GND.
② Lines of GND shall be one-point connected.
③ Wiring pattern of Digital shall be away from that of analog unit and cross-talk shall not be acceptable.
④ Lines of SCL and SDA of I²C BUS shall not be parallel if possible.
The lines shall be shielded, if they are adjacent to each other.
⑤ Lines of analog input shall not be parallel if possible. The lines shall be shielded, if they are adjacent to each other.

© 2010 ROHM Co., Ltd. All rights reserved.

Downloaded from Arrow.com.

●Interfaces

Terminal No.	Terminal Name	Terminal Voltage	Equivalent Circuit	Terminal Description
1 2 3 4 5 6	A1 A2 B1 B2 C1 C2	4.25	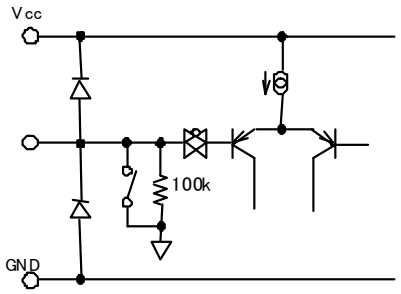	A terminal for signal input. The input impedance is 100kΩ(typ).
7 8 9 10 11 12 13	DP1 DN DP2 EP1 EN1 EN2 EP2	4.25	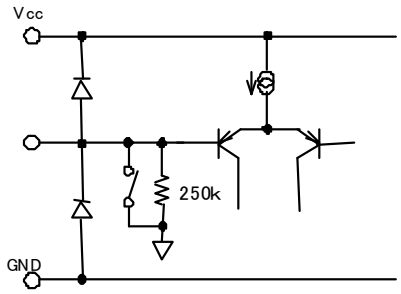	Input terminal available to single/Differential mode. The input impedance is 250kΩ(typ).
15	MUTE	—	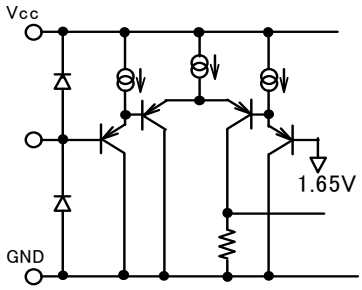	A terminal for external compulsory mute. If terminal voltage is High level, the mute is off. And if the terminal voltage is Low level, the mute is on.
18 19 20 21 22 23	OUTS2 OUTS1 OUTR2 OUTR1 OUTF2 OUTF1	4.25	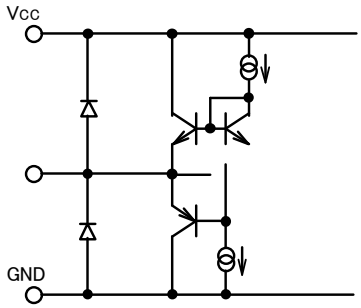	A terminal for fader and Subwoofer output.
17	LOUT	0～3.3	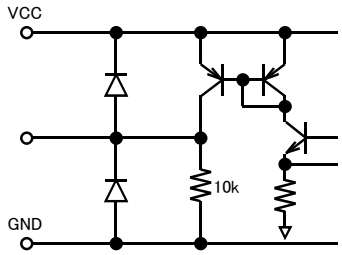	A terminal for level meter output (BD37534FV) Output impedance is 10kΩ(typ).

The figure in the pin explanation and input/output equivalent circuit is reference value, it doesn't guarantee the value.

© 2010 ROHM Co., Ltd. All rights reserved.

Downloaded from Arrow.com.

Terminal No.	Terminal Name	Terminal Voltage	Equivalent Circuit	Terminal Description
24	VCC	8.5		Power supply terminal.
25	SCL	—	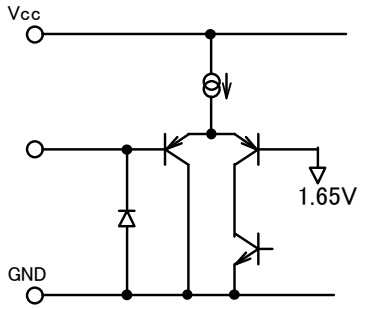	A terminal for clock input of I²C BUS communication.
26	SDA	—	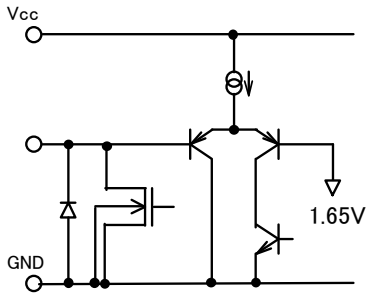	A terminal for data input of I²C BUS communication.
27	GND	0		Ground terminal.
28	FIL	4.25	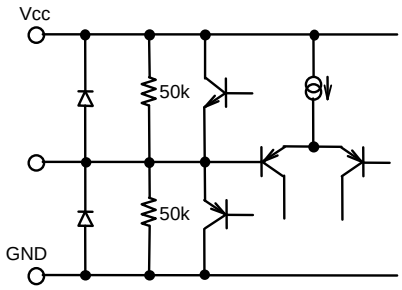	Voltage for reference bias of analog signal system. The simple precharge circuit and simple discharge circuit for an external capacitor are built in.
14	MIN	4.25	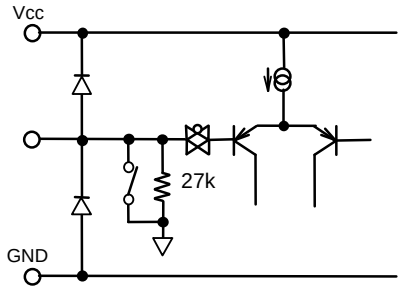	A terminal for signal input (BD37533FV, BD37534FV) The input impedance is 27kΩ(typ).
14 16 17	TEST	-		TEST terminal (BD37531FV,BD37532FV,BD37533FV) About BD37531FV and BD37532FV, 14,16,17pin are TEST Pin. About BD37533FV, 16,17pin are TEST Pin.

The figure in the pin explanation and input/output equivalent circuit is reference value, it doesn't guarantee the value.

© 2010 ROHM Co., Ltd. All rights reserved.

Downloaded from Arrow.com.

●Notes for use

1. Absolute maximum rating voltage

When it impressed the voltage on VCC more than the absolute maximum rating voltage, circuit currents increase rapidly, and there is absolutely a case to reach characteristic deterioration and destruction of a device. In particular in a serge examination of a set, when it is expected the impressing serge at VCC terminal (24pin), please do not impress the large and over the absolute maximum rating voltage (including a operating voltage + serge ingredient (around 14V)).

2. About a signal input part

1) About constant set up of input coupling capacitor

In the signal input terminal, the constant setting of input coupling capacitor C(F) be sufficient input impedance R_{IN}(Ω) inside IC and please decide. The first HPF characteristic of RC is composed.

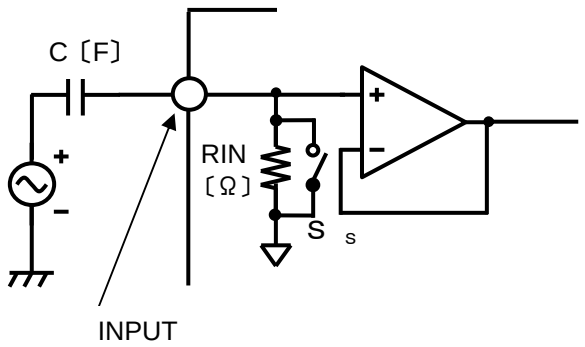

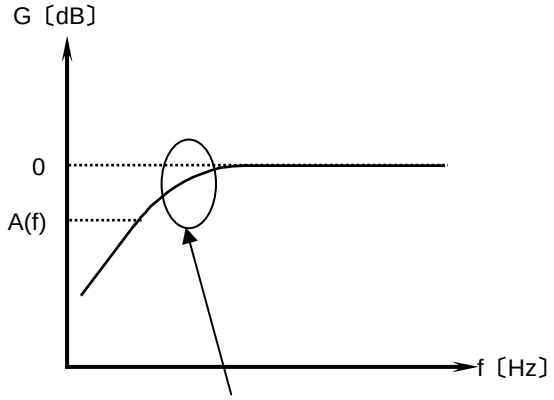

$$A(f) = \sqrt{\frac{(2\pi fCR_{IN})^2}{1+(2\pi fCR_{IN})^2}}$$

2) About the input selector SHORT

SHORT mode is the command which makes switch S_{SH} =ON an input selector part and input impedance RIN of all terminals, and makes resistance small. Switch S_{SH} is OFF when not choosing a SHORT command.
A constant time becomes small at the time of this command twisting to the resistance inside the capacitor connected outside and LSI. The charge time of a capacitor becomes short. Since SHORT mode turns ON the switch of S_{SH} and makes it low impedance, please use it at the time of a non-signal.

3. About Mute terminal(15pin) when power supply is off

Any voltage shall not be supplied to Mute terminal (15pin) when power-supply is off.
Please insert a resistor (about 2.2kΩ) to Mute terminal in series, if voltage is supplied to mute terminal in case. (Please refer Application Circuit Diagram.)

4. About TEST Pin

About TEST Pin, please use with OPEN.
About BD37531FV and BD37532FV, 14,16,17pin are TEST Pin. About BD37533FV, 16,17pin are TEST Pin.

© 2010 ROHM Co., Ltd. All rights reserved.

Downloaded from Arrow.com.

5. About Mixing (BD3753FV,BD37534FV)

・About specification of Fader -∞ at Mixing ON.

Mixed signal is added to Main signal after Fader Gain(+15～-79dB) like the following figure. When Fader is made a set up in -∞, the signal after a Mixing signal is added is done with MUTE. Because the -∞ circuit of Fader is in the step after the addition circuit.

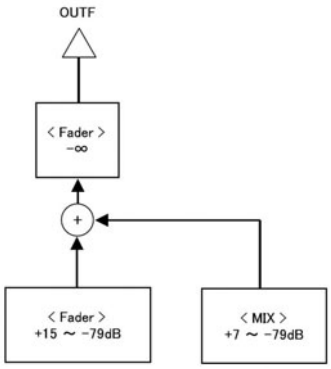

Fig.32 About Front Fader and Mixing

・About advanced switching of Mixing Gain/ATT

When advanced switching of Mixing Gain/ATT works, Mixing becomes the switching movement that it passed through state of Mixing OFF like B (A present setup of Mixing Gain/ATT → Mixing OFF → A target setup of Mixing Gain/ATT).

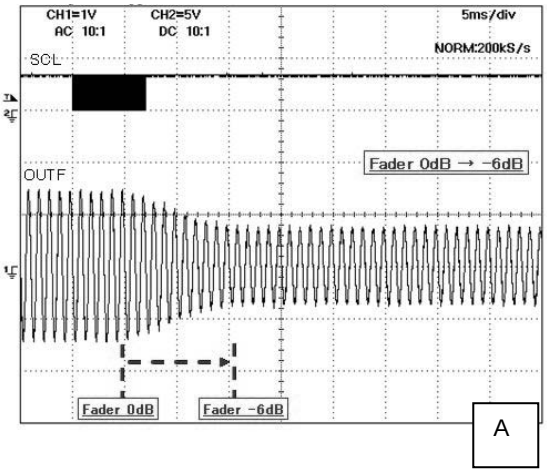

Fader Gain/ATT 0dB → -6dB advanced switching

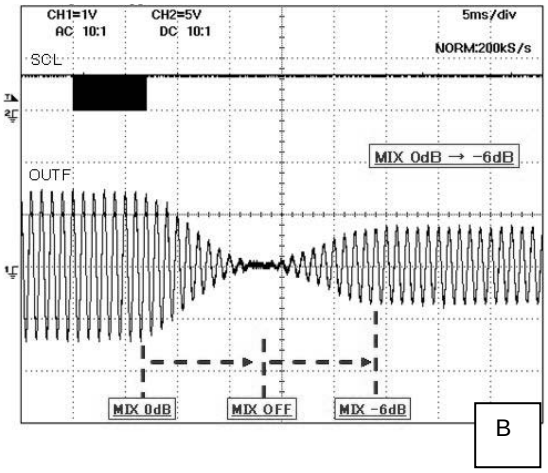

Mixing Gain/ATT 0dB → -6dB advanced switching

Fig.33 Advanced switching movement when Mixing Gain/ATT is changed

© 2010 ROHM Co., Ltd. All rights reserved.

Downloaded from Arrow.com.

●Thermal Derating Curve

About the thermal design by the IC

Characteristics of an IC have a great deal to do with the temperature at which it is used, and exceeding absolute maximum ratings may degrade and destroy elements. Careful consideration must be given to the heat of the IC from the two standpoints of immediate damage and long-term reliability of operation.

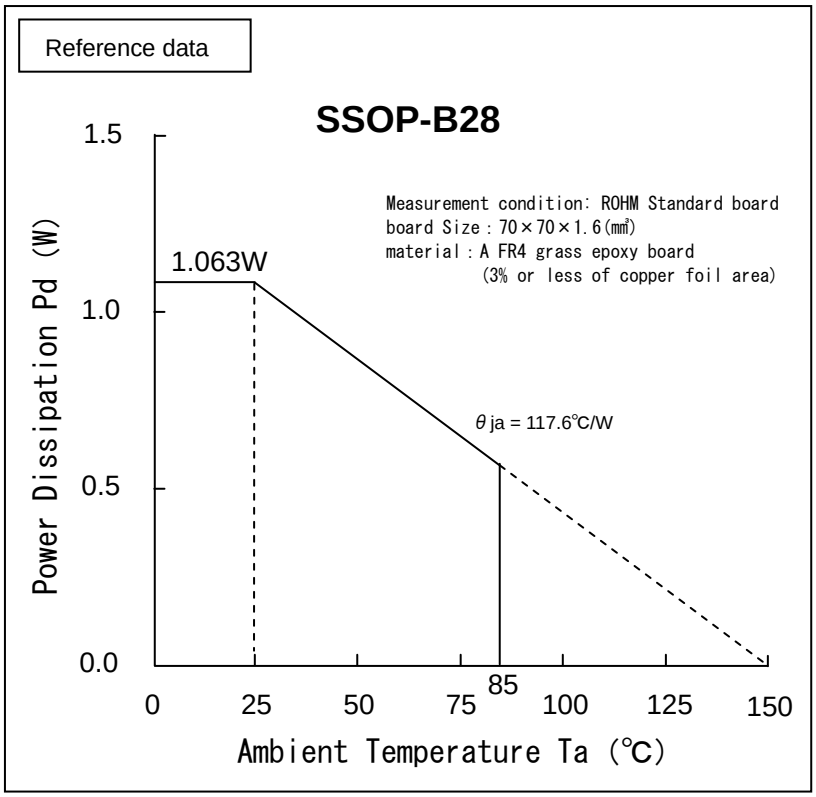

Fig.34 Temperature Derating Curve

Note) Values are actual measurements and are not guaranteed.

Power dissipation values vary according to the board on which the IC is mounted.

© 2010 ROHM Co., Ltd. All rights reserved.

Downloaded from Arrow.com.

● **Ordering part number**

B	D	3	7	5	3	1	F	V	-	E	2

Part No.

Part No.
37531
37532
37533
37534

Package
FV : SSOP-B28

Packaging and forming specification
E2: Embossed tape and reel

SSOP-B28

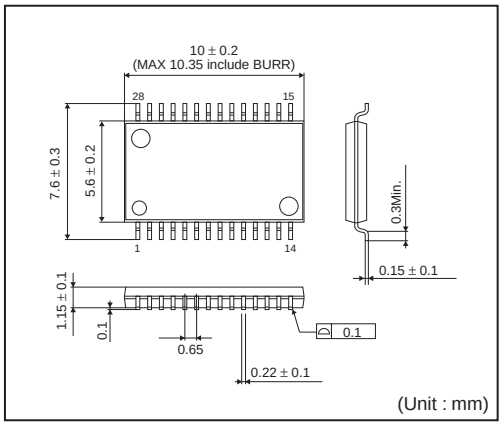

<Tape and Reel information>

Tape	Embossed carrier tape
Quantity	2000pcs
Direction of feed	E2 (The direction is the 1pin of product is at the upper left when you hold reel on the left hand and you pull out the tape on the right hand)

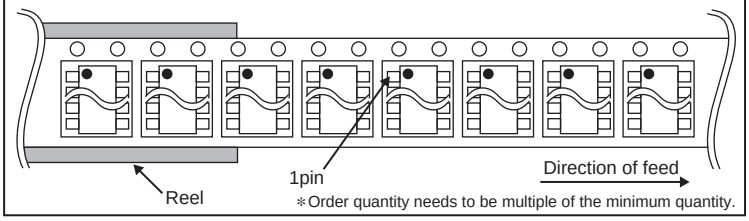

∗Order quantity needs to be multiple of the minimum quantity.

© 2010 ROHM Co., Ltd. All rights reserved.

Downloaded from Arrow.com.

Notice

Precaution on using ROHM Products

1. Our Products are designed and manufactured for application in ordinary electronic equipments (such as AV equipment, OA equipment, telecommunication equipment, home electronic appliances, amusement equipment, etc.). If you intend to use our Products in devices requiring extremely high reliability (such as medical equipment (Note 1), transport equipment, traffic equipment, aircraft/spacecraft, nuclear power controllers, fuel controllers, car equipment including car accessories, safety devices, etc.) and whose malfunction or failure may cause loss of human life, bodily injury or serious damage to property ("Specific Applications"), please consult with the ROHM sales representative in advance. Unless otherwise agreed in writing by ROHM in advance, ROHM shall not be in any way responsible or liable for any damages, expenses or losses incurred by you or third parties arising from the use of any ROHM's Products for Specific Applications.

(Note1) Medical Equipment Classification of the Specific Applications

JAPAN	USA	EU	CHINA
CLASSⅢ	CLASSⅢ	CLASSⅡb	CLASSⅢ
CLASSⅣ		CLASSⅢ	

2. ROHM designs and manufactures its Products subject to strict quality control system. However, semiconductor products can fail or malfunction at a certain rate. Please be sure to implement, at your own responsibilities, adequate safety measures including but not limited to fail-safe design against the physical injury, damage to any property, which a failure or malfunction of our Products may cause. The following are examples of safety measures:
   [a] Installation of protection circuits or other protective devices to improve system safety
   [b] Installation of redundant circuits to reduce the impact of single or multiple circuit failure

3. Our Products are designed and manufactured for use under standard conditions and not under any special or extraordinary environments or conditions, as exemplified below. Accordingly, ROHM shall not be in any way responsible or liable for any damages, expenses or losses arising from the use of any ROHM's Products under any special or extraordinary environments or conditions. If you intend to use our Products under any special or extraordinary environments or conditions (as exemplified below), your independent verification and confirmation of product performance, reliability, etc, prior to use, must be necessary:
   [a] Use of our Products in any types of liquid, including water, oils, chemicals, and organic solvents
   [b] Use of our Products outdoors or in places where the Products are exposed to direct sunlight or dust
   [c] Use of our Products in places where the Products are exposed to sea wind or corrosive gases, including Cl_2, H_2S, NH_3, SO_2, and NO_2
   [d] Use of our Products in places where the Products are exposed to static electricity or electromagnetic waves
   [e] Use of our Products in proximity to heat-producing components, plastic cords, or other flammable items
   [f] Sealing or coating our Products with resin or other coating materials
   [g] Use of our Products without cleaning residue of flux (even if you use no-clean type fluxes, cleaning residue of flux is recommended); or Washing our Products by using water or water-soluble cleaning agents for cleaning residue after soldering
   [h] Use of the Products in places subject to dew condensation

4. The Products are not subject to radiation-proof design.

5. Please verify and confirm characteristics of the final or mounted products in using the Products.

6. In particular, if a transient load (a large amount of load applied in a short period of time, such as pulse. is applied, confirmation of performance characteristics after on-board mounting is strongly recommended. Avoid applying power exceeding normal rated power; exceeding the power rating under steady-state loading condition may negatively affect product performance and reliability.

7. De-rate Power Dissipation (Pd) depending on Ambient temperature (Ta). When used in sealed area, confirm the actual ambient temperature.

8. Confirm that operation temperature is within the specified range described in the product specification.

9. ROHM shall not be in any way responsible or liable for failure induced under deviant condition from what is defined in this document.

Precaution for Mounting / Circuit board design

1. When a highly active halogenous (chlorine, bromine, etc.) flux is used, the residue of flux may negatively affect product performance and reliability.

2. In principle, the reflow soldering method must be used; if flow soldering method is preferred, please consult with the ROHM representative in advance.

For details, please refer to ROHM Mounting specification

© 2014 ROHM Co., Ltd. All rights reserved.

Downloaded from Arrow.com.

Precautions Regarding Application Examples and External Circuits

1. If change is made to the constant of an external circuit, please allow a sufficient margin considering variations of the characteristics of the Products and external components, including transient characteristics, as well as static characteristics.

2. You agree that application notes, reference designs, and associated data and information contained in this document are presented only as guidance for Products use. Therefore, in case you use such information, you are solely responsible for it and you must exercise your own independent verification and judgment in the use of such information contained in this document. ROHM shall not be in any way responsible or liable for any damages, expenses or losses incurred by you or third parties arising from the use of such information.

Precaution for Electrostatic

This Product is electrostatic sensitive product, which may be damaged due to electrostatic discharge. Please take proper caution in your manufacturing process and storage so that voltage exceeding the Products maximum rating will not be applied to Products. Please take special care under dry condition (e.g. Grounding of human body / equipment / solder iron, isolation from charged objects, setting of Ionizer, friction prevention and temperature / humidity control).

Precaution for Storage / Transportation

1. Product performance and soldered connections may deteriorate if the Products are stored in the places where:
   [a] the Products are exposed to sea winds or corrosive gases, including Cl2, H2S, NH3, SO2, and NO2
   [b] the temperature or humidity exceeds those recommended by ROHM
   [c] the Products are exposed to direct sunshine or condensation
   [d] the Products are exposed to high Electrostatic

2. Even under ROHM recommended storage condition, solderability of products out of recommended storage time period may be degraded. It is strongly recommended to confirm solderability before using Products of which storage time is exceeding the recommended storage time period.

3. Store / transport cartons in the correct direction, which is indicated on a carton with a symbol. Otherwise bent leads may occur due to excessive stress applied when dropping of a carton.

4. Use Products within the specified time after opening a humidity barrier bag. Baking is required before using Products of which storage time is exceeding the recommended storage time period.

Precaution for Product Label

QR code printed on ROHM Products label is for ROHM's internal use only.

Precaution for Disposition

When disposing Products please dispose them properly using an authorized industry waste company.

Precaution for Foreign Exchange and Foreign Trade act

Since our Products might fall under controlled goods prescribed by the applicable foreign exchange and foreign trade act, please consult with ROHM representative in case of export.

Precaution Regarding Intellectual Property Rights

1. All information and data including but not limited to application example contained in this document is for reference only. ROHM does not warrant that foregoing information or data will not infringe any intellectual property rights or any other rights of any third party regarding such information or data. ROHM shall not be in any way responsible or liable for infringement of any intellectual property rights or other damages arising from use of such information or data.:

2. No license, expressly or implied, is granted hereby under any intellectual property rights or other rights of ROHM or any third parties with respect to the information contained in this document.

Other Precaution

1. This document may not be reprinted or reproduced, in whole or in part, without prior written consent of ROHM.

2. The Products may not be disassembled, converted, modified, reproduced or otherwise changed without prior written consent of ROHM.

3. In no event shall you use in any way whatsoever the Products and the related technical information contained in the Products or this document for any military purposes, including but not limited to, the development of mass-destruction weapons.

4. The proper names of companies or products described in this document are trademarks or registered trademarks of ROHM, its affiliated companies or third parties.

© 2014 ROHM Co., Ltd. All rights reserved.

Downloaded from Arrow.com.

General Precaution

1. Before you use our Products, you are requested to carefully read this document and fully understand its contents. ROHM shall not be in any way responsible or liable for failure, malfunction or accident arising from the use of any ROHM's Products against warning, caution or note contained in this document.

2. All information contained in this document is current as of the issuing date and subject to change without any prior notice. Before purchasing or using ROHM's Products, please confirm the latest information with a ROHM sales representative.

3. The information contained in this document is provided on an "as is" basis and ROHM does not warrant that all information contained in this document is accurate and/or error-free. ROHM shall not be in any way responsible or liable for any damages, expenses or losses incurred by you or third parties resulting from inaccuracy or errors of or concerning such information.

© 2014 ROHM Co., Ltd. All rights reserved.

Downloaded from Arrow.com.